STACO
ENERGY PRODUCTS CO.

Variable Transformers
Series 1000 • 3.5 to 10.0 Amperes

STACO's 1010B operates on 120 volts and is rated for constant current of 10 amperes. The 1020B operates on 240 volts and constant current of 3.5 amperes. Coil tapping arrangements allow for 0 to input line voltage or 17% above line voltage. These variable transformers may be operated from 50-1500 hertz with no reduction in output current.

Uncased models have the shaft extending from the base end. This shaft is fully adjustable and can be extended from either end for general utility mounting. Cased styles, which have a "CT" suffix, feature the protective screening over the coil assembly and a terminal box cover with knock-outs to accept conduit.

Motor driven units are available in single, two and three ganged assemblies; cased or uncased styles as identified by the prefix "M" in the type number. If a motor driven model is ordered, be sure to prefix the part number with the desired travel time from 0 to maximum of 5, 15, 30, or 60 seconds.

The synchronous motor is designed for operation on 120 volts, 50/60 hertz single phase lines and draws approximately 0.3 amperes.

PART NO.	WIRING	INPUT		OUTPUT					SHAFT ROTATION FOR VOLTAGE INCREASE	TERMINAL CONNECTIONS (For increasing Voltage) As Viewed from Base End			SCHE-MATIC (Pg 8 & 9)	NET WT. LBS.	(Max) MOTOR DRIVEN
		VOLTS	HERTZ	VOLTS	CONSTANT CURRENT LOAD		CONSTANT IMPEDANCE LOAD			Input	Jumper•	Output			
					MAX AMPS	MAX KVA	MAX AMPS	MAX KVA							
1010B 1010BCT M1010B † M1010BCT†	Single Phase	120	50/60	0-120	10	1.2	13	1.56	CW	1-4	—	4-3	10	10 1/4	16 3/4
									CCW	1-4	—	1-3			
				0-140	10	1.4	—	—	CW	4-5	—	4.3			
									CCW	1-2	—	1-3			
1010B-2 1010BCT-2 M1010B-2† M1010BCT-2†	Single Phase Series	240	50/60	0-240	10	2.4	13	3.12	CW	1-1	4-4	3-3	10 & 4	22 1/2	30 7/8
									CCW	4-4	1-1	3-3			
				0-280	10	2.8	—	—	CW	5-5	4-4	3-3			
									CCW	2-2	1-1	3.3			
	Three Phase Open Deltaπ	120++	50/60	0-120	10	2.08	13	2.70	CW	1-4-1	4-4	3-4-3	10 & 5		
									CCW	4-1-4	1-1	3-1-3			
				0-140	10	2.42	—	—	CW	5-4-5	4-4	3-4-3			
									CCW	2-1-2	1-1	3-1-3			
1010B-3 1010BCT-3 M1010B-3† M1010BCT-3†	Three Phase Wyeπ	240++	50/60	0-240	10	4.16	13	5.4	CW	1-1-1	4-4-4	3-3-3	10 & 6	34 1/2	42 1/2
									CCW	4-4-4	1-1-1	3-3-3			
			60	0-280	10	4.85	—	—	CW	5-5-5	4-4-4	3-3-3			
									CCW	2-2-2	1-1-1	3-3-3			
3PN1010B	Single Phase	120	50/60	0-140	10‡	1.4	—	—	CW	LINE CORD & RECEPTACLE			3	10 1/4	—
3PN1010BA 3PN1010BV	Single Phase	120	50/60	0-140	10‡	1.4	w/Ammeter w/Voltmeter		CW	LINE CORD & RECEPTACLE			9	10 1/4	—
1020B 1020BCT M1020B† M1020BCT†	Single Phase	240	50/60	0-240	3.5	0.84	5.0	1.20	CW	1-4	—	4.3	12	10 1/4	16 3/4
									CCW	1-4	—	1-3			
				0-280	3.5	0.98	—	—	CW	4-5	—	4-3			
									CCW	1-2	—	1-3			
		120	50/60	0-280	3.5#	0.42§	—	—	CW	4-7	—	4-3			
									CCW	1-6	—	1-3			
1020B-2 1020BCT-2 M1020B-2+ M1020BCT-2+	Single Phase Series	480	50/60	0-480	3.5	1.68	5.0	2.4	CW	1-1	4-4	3-2	12 & 4	22 1/2	30 3/4
									CCW	4-4	1-1	3-3			
				0-560	3.5	1.96	—	—	CW	5-5	4-4	3-3			
							—	—	CCW	2-2	1-1	3-3			
		240	50/60	0-560	3.5#	0.84§	—	—	CW	7-7	4-4	3-3			
									CCW	6-6	1-1	3-3			
	Three Phase Open Delta π	240++	50/60	0-240	3.5	1.45	5.0	2.08	CW	1-4-1	4-4	3-4-3	12 & 5		
									CCW	4-1-4	1-1	3-1-3			
				0-280	3.5	1.70	—	—	CW	5-4-5	4-4	3-4-3			
									CCW	2-1-2	1-1	3-1-3			
		120++	50/60	0-280	3.5#	0.73§	—	—	CW	7-4-7	4-4	3-4-3			
									CCW	6-1-6	1-1	3-1-3			
1020B-3 1020BCT-3 M1020B-3 M1020BCT-3	Three Phase Wye π	480++	50/60	0-480	3.5	2.91	5.0	4.16	CW	1-1-1	4-4-4	3-3-3	12 & 6	34 1/2	42 1/4
									CCW	4-4-4	1-1-1	3-3-3i			
			60	0-560	3.5	3.40	—	—	CW	5-5-5	4-4-4	3-3-3			
									CCW	2-2-2	1-1-1	3-3-3			
		240++	60	0-560	3.5#	1.46§	—	—	CW	7-7-7	4-4-4	3-3-3			
									CCW	6-6-6	1-1-1	3-3-3			
3PN1020B	Single Phase	240	50/60	0-280	3.5‡	0.98	—	—	CW	LINE CORD & RECEPTACLE			3	10 1/4	—
3PN1020BA 3PN1020BV	Single Phase	240	50/60	0-280	3.5‡	0.98	w/Ammeter w/Voltmeter		CW	LINE CORD & RECEPTACLE			9	10 1/4	—

• Jumper provided in the standard common position and should be moved or removed as required.

++ Line to line voltage

‡ Unit is fused for the constant current rating at the factory.

† Motor driven units use terminal connections for CCW increasing voltage, as viewed from the base end. See Fig 23 on page 9 for motor wiring.

§ Maximum KVA at maximum output voltage and corresponding derated output current. Maximum KVA for lower voltages may be calculated from derating curve Figure B, page 6.

π If ganged units are used in a system that ordinarily has a common neutral or ground between source and load, the neutral or ground must be connected to the common terminals of the variable transformer assembly. If the system has no neutral, the load must be balanced or the transformers will be damaged.

Maximum output current in output voltage range from 0 to 25% above line voltage. At higher output voltages, the output current must be reduced according to the derating curve, Figure B, page 6.

1000/1200 Series

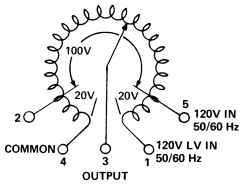

VIEW FROM BASE END
For opposite rotation interchange external connections from 5 to 2 and 4 to 1. Terminals 2 and 5 omitted on 1210.

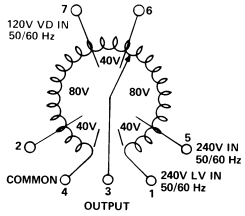

VIEW FROM BASE END
For opposite rotation interchange external connections from 5 to 2, 4 to 1 and 7 to 6. Terminals 2, 5, 6 and 7 omitted on 1220.

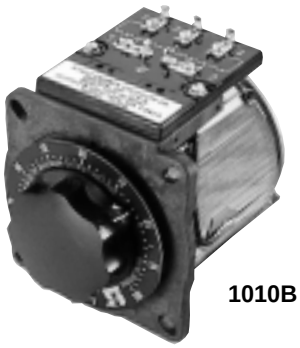

1010B

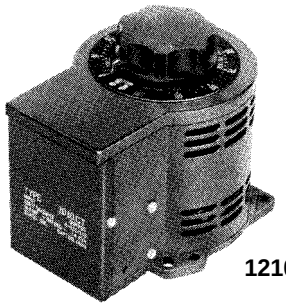

1210BCT

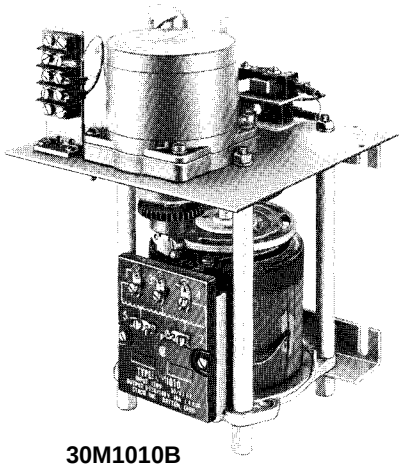

30M1010B

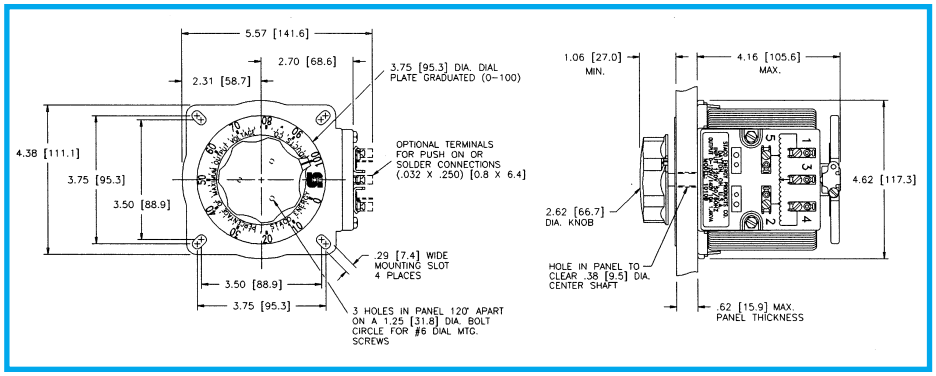

Single Unit, Uncased

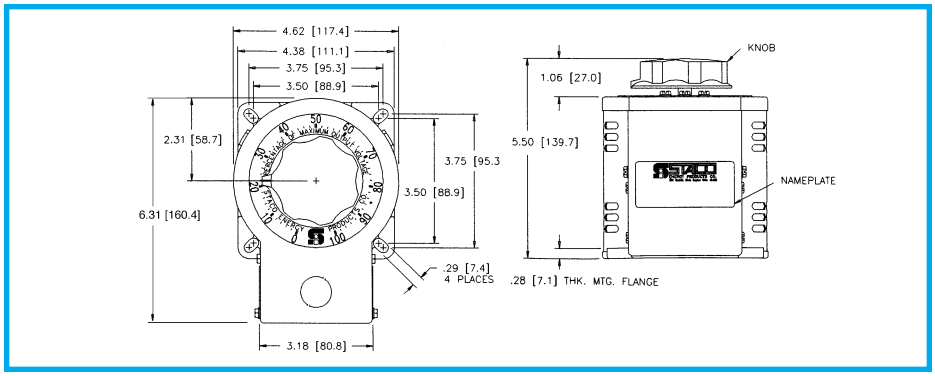

Single Unit, Cased

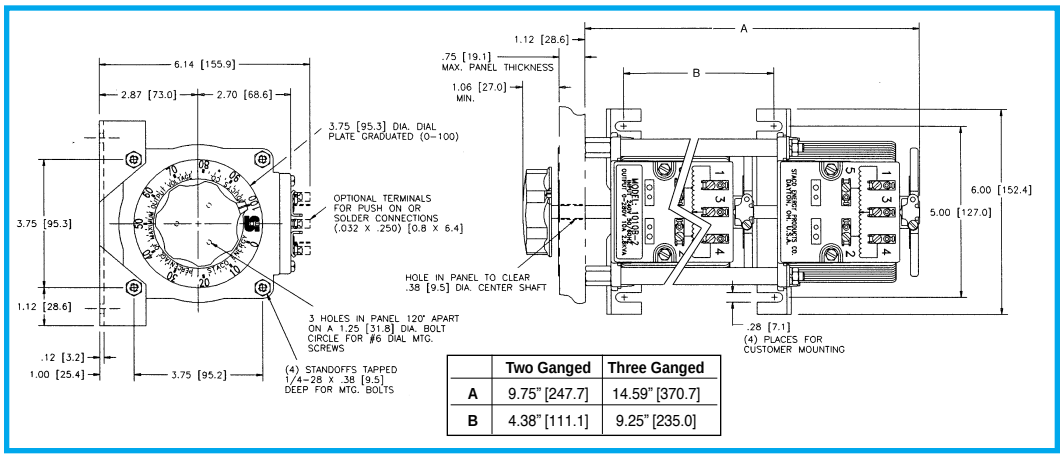

	Two Ganged	Three Ganged
A	9.75" [247.7]	14.59" [370.7]
B	4.38" [111.1]	9.25" [235.0]

Two and Three Ganged, Uncased

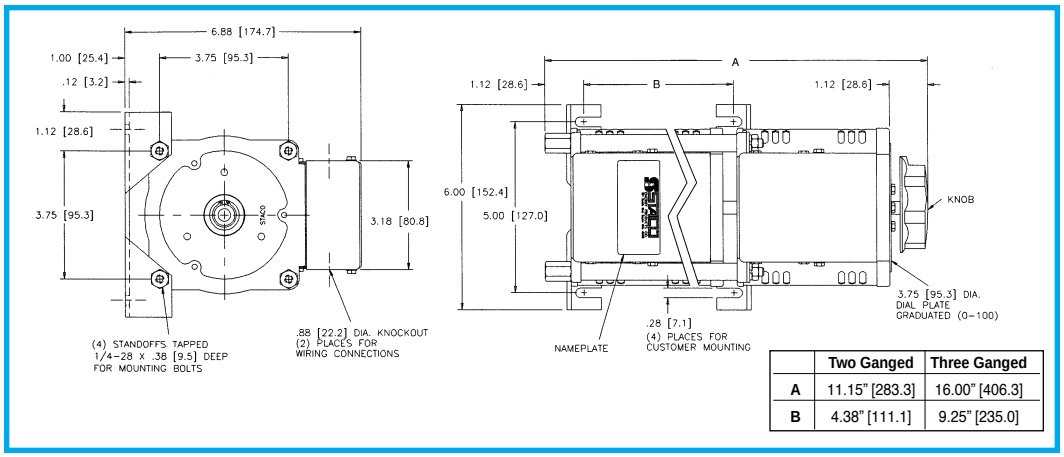

	Two Ganged	Three Ganged
A	11.15" [283.3]	16.00" [406.3]
B	4.38" [111.1]	9.25" [235.0]

Two and Three Ganged, Cased

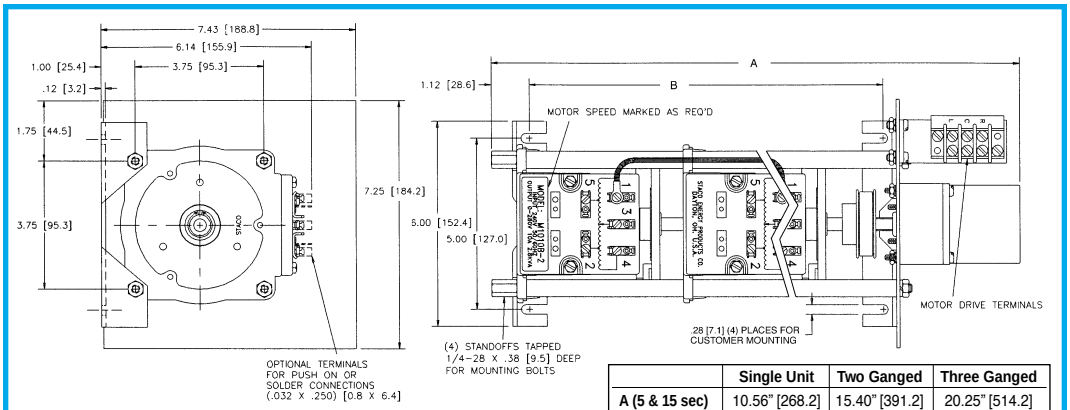

	Single Unit	Two Ganged	Three Ganged
A (5 & 15 sec)	10.56" [268.2]	15.40" [391.2]	20.25" [514.2]
A (30 & 60 sec)	10.95" [278.1]	15.79" [401.1]	20.64" [524.2]
B	5.50" [139.7]	10.31" [261.9]	15.12" [384.2]

1210B
Front View

Motorized Single, Two and Three Ganged, Uncased

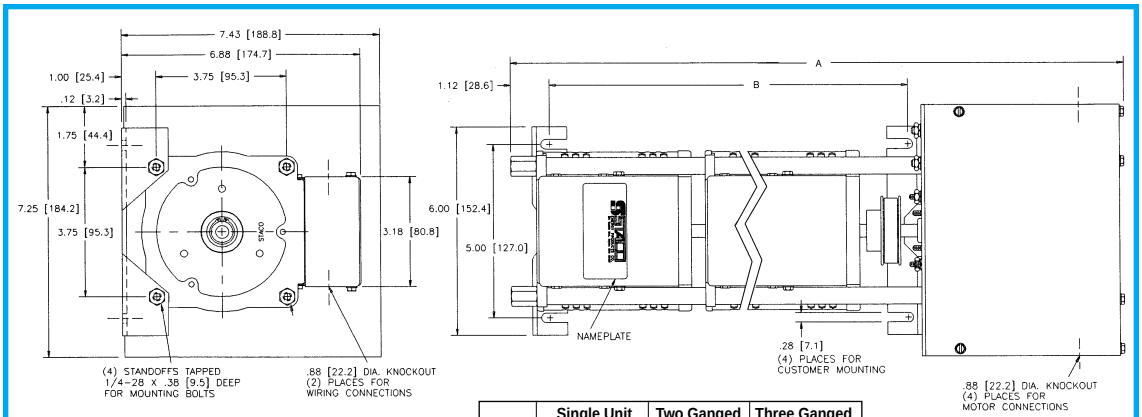

	Single Unit	Two Ganged	Three Ganged
A	12.79" [324.8]	17.63" [447.8]	22.47" [570.82]
B	5.50" [139.7]	10.31" [261.9]	15.12" [384.2]

1210B
Rear View

Motorized Single, Two and Three Ganged, Cased

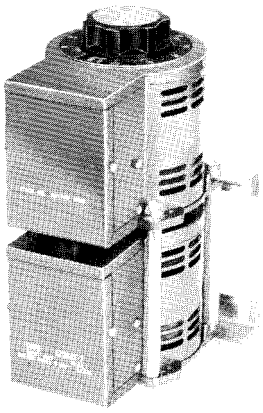

1220BCT-2

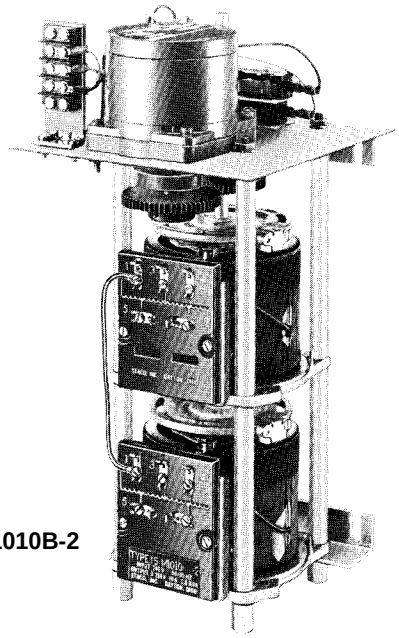

15M1010B-2

Компания «ЭлектроПласт» предлагает заключение долгосрочных отношений при поставках импортных электронных компонентов на взаимовыгодных условиях!

Наши преимущества:

- Оперативные поставки широкого спектра электронных компонентов отечественного и импортного производства напрямую от производителей и с крупнейших мировых складов;
- Поставка более 17-ти миллионов наименований электронных компонентов;
- Поставка сложных, дефицитных, либо снятых с производства позиций;
- Оперативные сроки поставки под заказ (от 5 рабочих дней);
- Экспресс доставка в любую точку России;
- Техническая поддержка проекта, помощь в подборе аналогов, поставка прототипов;
- Система менеджмента качества сертифицирована по Международному стандарту ISO 9001;
- Лицензия ФСБ на осуществление работ с использованием сведений, составляющих государственную тайну;
- Поставка специализированных компонентов (Xilinx, Altera, Analog Devices, Intersil, Interpoint, Microsemi, Aeroflex, Peregrine, Syfer, Eurofarad, Texas Instrument, Miteq, Cobham, E2V, MA-COM, Hittite, Mini-Circuits,General Dynamics и др.);

Помимо этого, одним из направлений компании «ЭлектроПласт» является направление «Источники питания». Мы предлагаем Вам помощь Конструкторского отдела:

- Подбор оптимального решения, техническое обоснование при выборе компонента;
- Подбор аналогов;
- Консультации по применению компонента;
- Поставка образцов и прототипов;
- Техническая поддержка проекта;
- Защита от снятия компонента с производства.

Как с нами связаться

Телефон: 8 (812) 309 58 32 (многоканальный)
Факс: 8 (812) 320-02-42
Электронная почта: org@eplast1.ru
Адрес: 198099, г. Санкт-Петербург, ул. Калинина, дом 2, корпус 4, литера А.