* Please visit the product pages on our website for the most up-to-date product information

SENSOR-LINK

Conxall's Sensor-Link series includes the Mini-Mizer, AC Micro-Mizer, DC Micro-Mizer and the Nano-Mizer product lines, which are overmolded cable assemblies. The overmolding process provides for environmental sealing and strain relief for flexing applications.

Designed to meet or exceed the requirements of UL, CSA, NEMA, ANSI, IEC and SAE, the Sensor-Link series is intermateable and intermountable with other manufacturers equivalents. Conxall's strength is the combination of application experience and internal manufacturing capabilities that provide the knowledge and flexibility to meet and exceed the expectations of our customers.

Originally developed as an interconnect for a variety of sensoring devices, the Sensor-Link series has found a wide range of applications as a general disconnect. Our exceptional quality, service and cost effectiveness makes Sensor-Link series the logical choice.

In our ongoing effort to expand our product offering, we are introducing our Mini and DC Micro Multi-Port box series, Micro/Mini LEDs, Die Block Connectors, and Shielded Nano-Mizer assemblies. Conxall's goal is to be a full service supplier to the sensor market.

TABLE OF CONTENTS

Mini-Mizer® "C" Size 4-5
Mini-Mizer® "A" Size 6-10
Mini-Mizer® EMI/RFI Shielded 11
Mini-Mizer® LED Cordsets 12
Mini-Mizer® Wiring Sequence Charts & Specifications 13-15
AC Metal Micro-Mizer® 16-19
DC Metal Micro-Mizer® 20-23
Single Key Plastic Micro-Mizer® 24-25
DC Micro-Mizer® EMI/RFI Shielded 26
DC Micro-Mizer® LED Cordsets 27
Micro-Mizer® Wiring Sequence Charts & Specifications 28-29
Nano-Mizer® and Molded Cord Sets 30-31
Nano-Mizer® EMI/RFI Shielded 32
Nano-Mizer® Wiring Sequence Charts and Specifications 33
Die Block Connectors 34-36
Die Block Wiring Sequence Charts and Specifications 37
Multi-Port "A" Size Mini-Mizer® Junction Boxes 38-39
Multi-Port DC Micro-Mizer® Junction Boxes 40-42
New Products 43

Warranty

CONXALL® Corp. manufactures the finest quality products available to the marketplace. However, these products are intended to be used in accordance with the specifications described in this catalog. Any use or application that deviates from the stated operating specifications is not recommended and may be unsafe. A limited warranty applies to all CONXALL® Corp. products. Except for obligations specifically assumed by CONXALL® Corp. under warranty, CONXALL® Corp. will not be liable for any loss, damage, cost of repairs, incidental or consequential damages of any kind whether or not based upon expressed or implied warranty, contract, negligence, or strict liability arising in connection with the design, manufacture, sale, use or repair of the products.

All drawings contained in this document are for representational purposes only, and should not be for used final specifications or engineering.

* Please visit the product pages on our website for the most up-to-date product information

SENSOR-LINK
MINI-MIZER® "C" Size

MOLDED CONNECTOR ASSEMBLIES

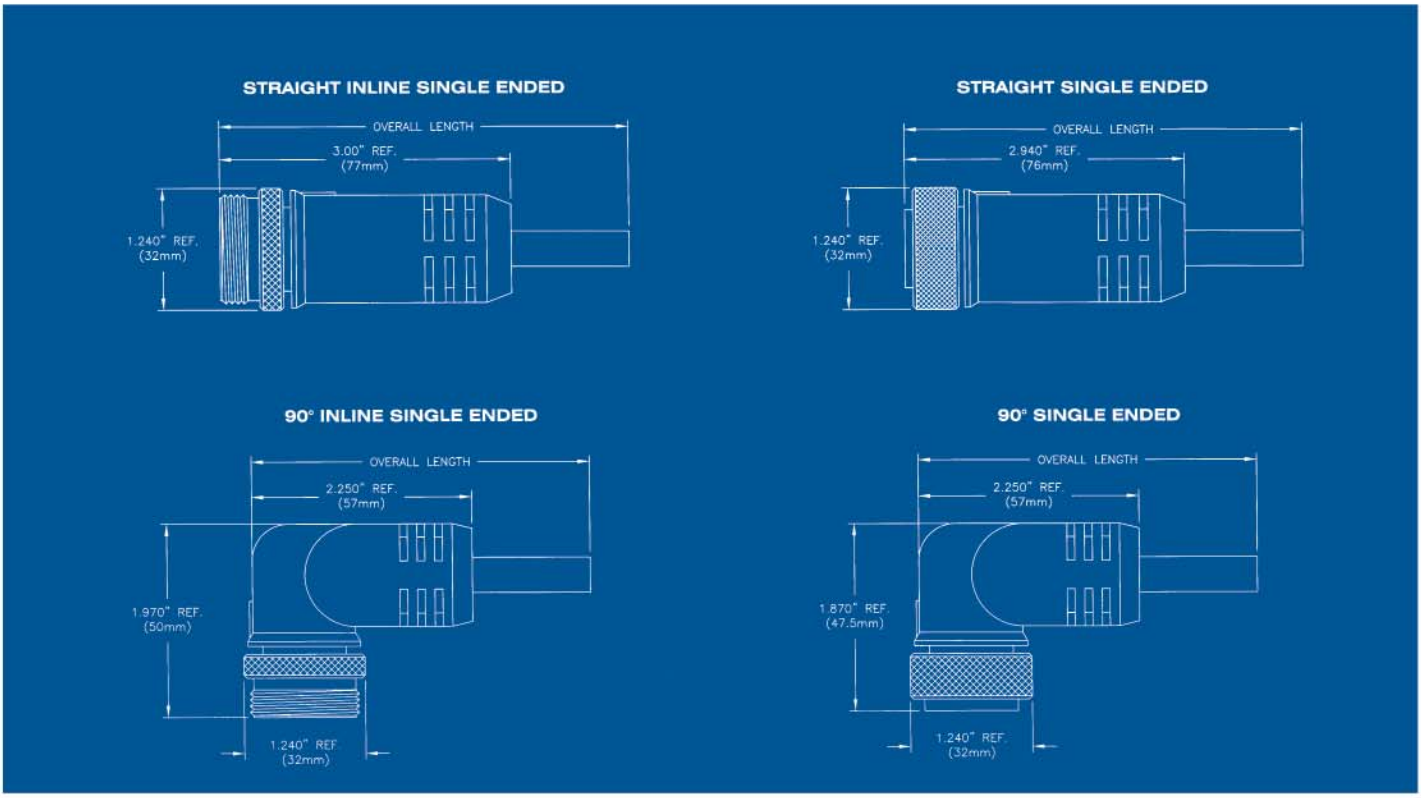

Face View Male	Rating	Overall Length Inches	Straight Male Single Ended	Straight Female Single Ended	90° Male Single Ended	90° Female Single Ended	Straight Inline Male Single Ended	Straight Inline Female Single Ended
		36	169P36	169S36	189P36	189S36	199P36	199S36
	7A	72	169P72	169S72	189P72	189S72	199P72	199S72
	600V	144	169P144	169S144	189P144	189S144	199P144	199S144
		Custom	169PXXXX	169SXXXX	189PXXXX	189SXXXX	199PXXXX	199SXXXX
		36	1610P36	1610S36	1810P36	1810S36	1910P36	1910S36
	7A	72	1610P72	1610S72	1810P72	1810S72	1910P72	1910S72
	600V	144	1610P144	1610S144	1810P144	1810S144	1910P144	1910S144
		Custom	1610PXXXX	1610SXXXX	1810PXXXX	1810SXXXX	1910PXXXX	1910SXXXX
		36	1612P36	1612S36	1812P36	1812S36	1912P36	1912S36
	7A	72	1612P72	1612S72	1812P72	1812S72	1912P72	1912S72
	600V	144	1612P144	1612S144	1812P144	1812S144	1912P144	1912S144
		Custom	1612PXXXX	1612SXXXX	1812PXXXX	1812SXXXX	1912PXXXX	1912SXXXX
		36	1619P36	1619S36	1819P36	1819S36	1919P36	1919S36
	5A	72	1619P72	1619S72	1819P72	1819S72	1919P72	1919S72
	600V	144	1619P144	1619S144	1819P144	1819S144	1919P144	1919S144
		Custom	1619PXXXX	1619SXXXX	1819PXXXX	1819SXXXX	1919PXXXX	1919SXXXX

XXXX – Indicates "overall length / lead length" in inches.
For mechanical, electrical and wiring sequence see pages 13-15.
90° assemblies have key position at 12 o'clock.

* Please visit the product pages on our website for the most up-to-date product information

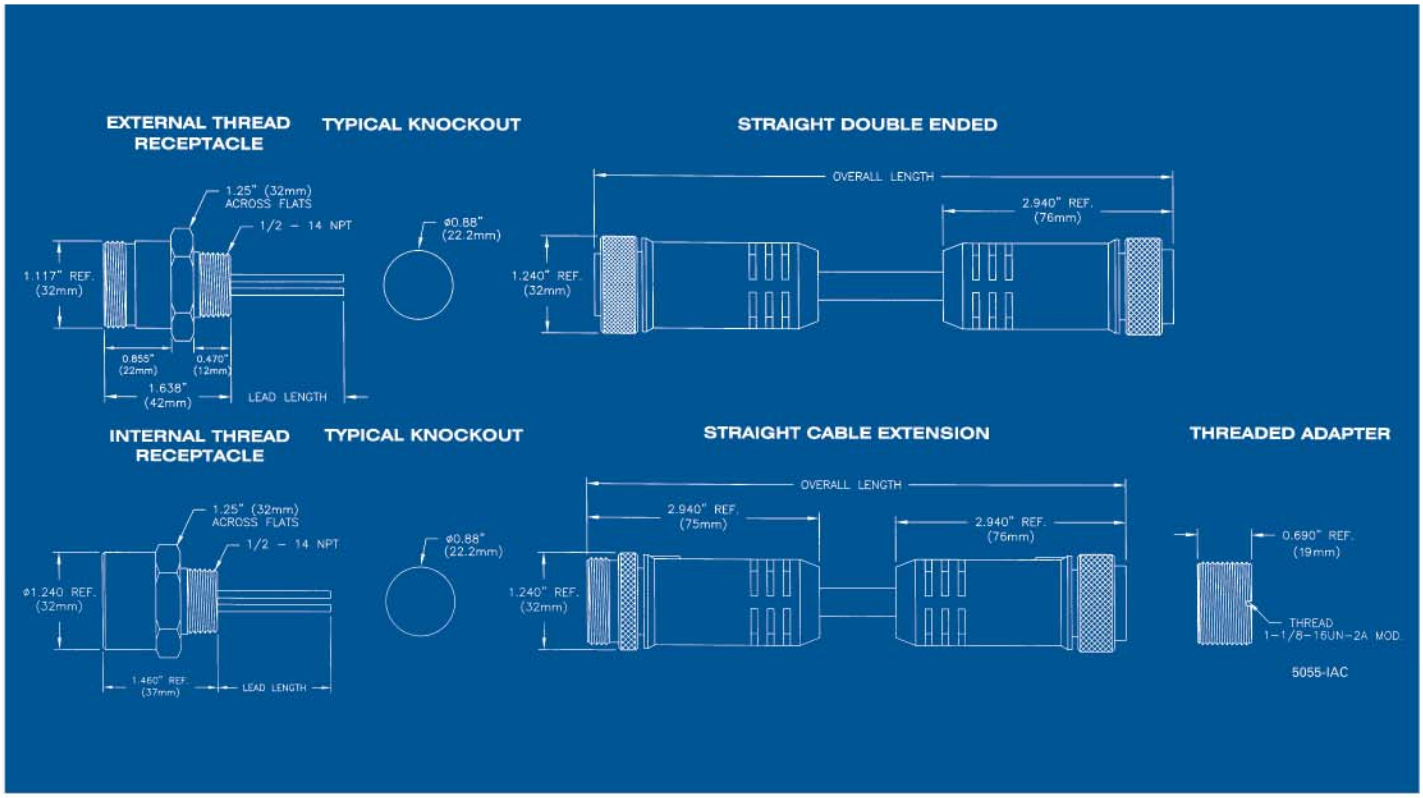

Externally Threaded Receptacle Male 12 Inch Leads	Externally Threaded Receptacle Female 12 Inch Leads	Internally Threaded Receptacle Male 12 Inch Leads	Internally Threaded Receptacle Female 12 Inch Leads	Straight Male /Male Double Ended	Straight Female /Female Double Ended	Straight Male /Female Double Ended	Extension Set Inline Male/Female Double Ended	Extension Set Inline Female/Male Double Ended
				569P9P36	569S9S36	569P9S36	519P9S36	519S9P36
179P12	179S12	179PN12	179SN12	569P9P72	569S9S72	569P9S72	519P9S72	519S9P72
				569P9P144	569S9S144	569P9S144	519P9S144	519S9P144
179PXXX	179SXXX	179PNXXX	179SNXXX	569P9PXXXX	569S9SXXXX	569P9SXXXX	519P9SXXXX	519S9PXXXX
				5610P10P36	5610S10S36	5610P10S36	5110P10S36	5110S10P36
1710P12	1710S12	1710PN12	1710SN12	5610P10P72	5610S10S72	5610P10S72	5110P10S72	5110S10P72
				5610P10P144	5610S10S144	5610P10S144	5110P10S144	5110S10P144
1710PXXX	1710SXXX	1710PNXXX	1710SNXXX	5610P10PXXXX	5610S10SXXXX	5610P10SXXXX	5110P10SXXXX	5110S10PXXXX
				5612P12P36	5612S12S36	5612P12S36	5112P12S36	5112S12P36
1712P12	1712S12	1712PN12	1712SN12	5612P12P72	5612S12S72	5612P12S72	5112P12S72	5112S12P72
				5612P12P144	5612S12S144	5612P12S144	5112P12S144	5112S12P144
1712PXXX	1712SXXX	1712PNXXX	1712SNXXX	5612P12PXXXX	5612S12SXXXX	5612P12SXXXX	5112P12SXXXX	5112S12PXXXX
				5619P19P36	5619S19S36	5619P19S36	5119P19S36	5119S19P36
1719P12	1719S12	1719PN12	1719SN12	5619P19P72	5619S19S72	5619P19S72	5119P19S72	5119S19P72
				5619P19P144	5619S19S144	5619P19S144	5119P19S144	5119S19P144
1719PXXX	1719SXXX	1719PNXXX	1719SNXXX	5619P19PXXXX	5619S19SXXXX	5619P19SXXXX	5119P19SXXXX	5119S19PXXXX

XXXX – Indicates "overall length / lead length" in inches.
For mechanical, electrical and wiring sequence see pages 13-15.

* Please visit the product pages on our website for the most up-to-date product information

SENSOR-LINK
MINI-MIZER® "A" Size

MOLDED CONNECTOR ASSEMBLIES

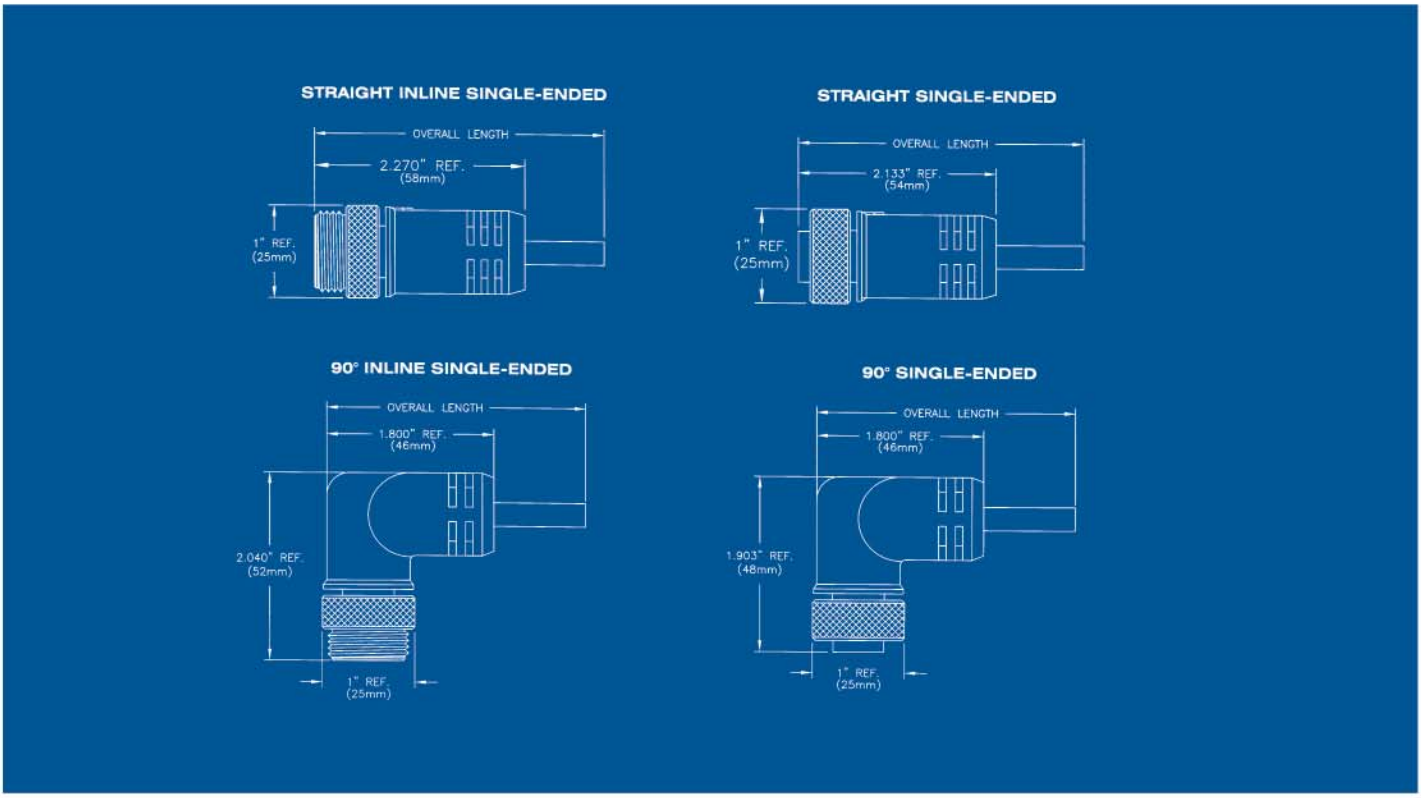

Face View Male	Rating	Overall Length Inches	Straight Male Single Ended	Straight Female Single Ended	90° Male Single Ended	90° Female Single Ended	Straight Inline Male Single Ended	Straight Inline Female Single Ended	Externally Threaded Receptacle Male 12 Inch Leads
	13A 600V	36	162P36	162S36	182P36	182S36	192P36	192S36	172P12
		72	162P72	162S72	182P72	182S72	192P72	192S72	
		144	162P144	162S144	182P144	182S144	192P144	192S144	
		Custom	162PXXXX	162SXXXX	182PXXXX	182SXXXX	192PXXXX	192SXXXX	172PXXX
	13A 600V	36	163P36	163S36	183P36	183S36	193P36	193S36	173P12
		72	163P72	163S72	183P72	183S72	193P72	193S72	
		144	163P144	163S144	183P144	183S144	193P144	193S144	
		Custom	163PXXXX	163SXXXX	183PXXXX	183SXXXX	193PXXXX	193SXXXX	173PXXX
	10A 600V	36	164P36	164S36	184P36	184S36	194P36	194S36	174P12
		72	164P72	164S72	184P72	184S72	194P72	194S72	
		144	164P144	164S144	184P144	184S144	194P144	194S144	
		Custom	164PXXXX	164SXXXX	184PXXXX	184SXXXX	194PXXXX	194SXXXX	174PXXX
	8A 600V	36	165P36	165S36	185P36	185S36	195P36	195S36	175P12
		72	165P72	165S72	185P72	185S72	195P72	195S72	
		144	165P144	165S144	185P144	185S144	195P144	195S144	
		Custom	165PXXXX	165SXXXX	185PXXXX	185SXXXX	195PXXXX	195SXXXX	175PXXX
	8A 600V	36	166P36	166S36	186P36	186S36	196P36	196S36	176P12
		72	166P72	166S72	186P72	186S72	196P72	196S72	
		144	166P144	166S144	186P144	186S144	196P144	196S144	
		Custom	166PXXXX	166SXXXX	186PXXXX	186SXXXX	196PXXXX	196SXXXX	176PXXX

XXXX – Indicates "overall length / lead length" in inches.
For mechanical, electrical and wiring sequence see pages 13-15.
90° assemblies have key position at 12 o'clock.

* Please visit the product pages on our website for the most up-to-date product information

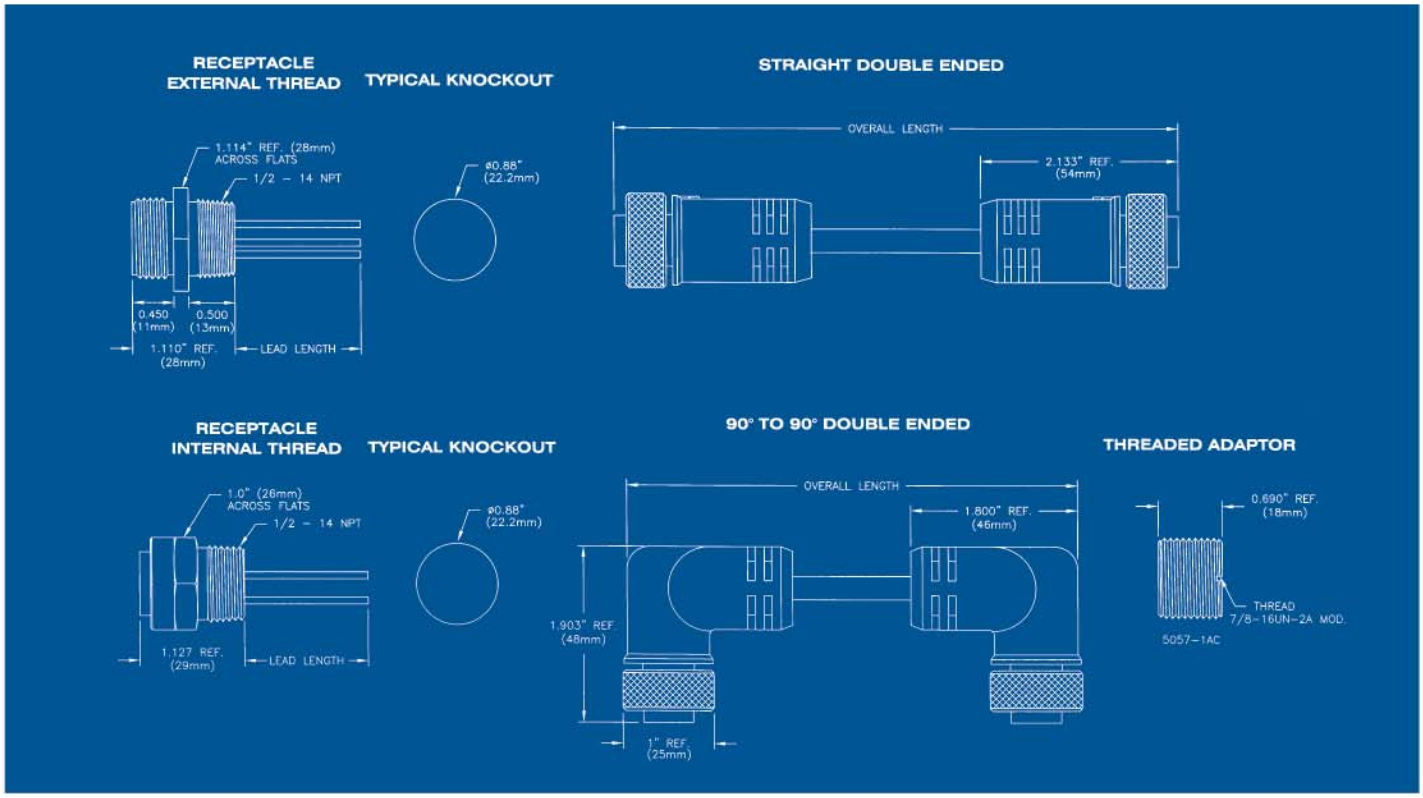

Externally Threaded Receptacle Female 12 Inch Leads	Internally Threaded Receptacle Male 12 Inch Leads	Internally Threaded Receptacle Female 12 Inch Leads	Straight Male /Male Double Ended	Straight Female /Female Double Ended	Straight Male /Female Double Ended	90° Male /Male Double Ended	90° Female /Female Double Ended	90° Male /Female Double Ended
			562P2P36	562S2S36	562P2S36	542P2P36	542S2S36	542P2S36
172S12	172PN12	172SN12	562P2P72	562S2S72	562P2S72	542P2P72	542S2S72	542P2S72
			562P2P144	562S2S144	562P2S144	542P2P144	542S2S144	542P2S144
172SXXX	172PNXXX	172SNXXX	562P2PXXXX	562S2SXXXX	562P2SXXXX	542P2PXXXX	542S2SXXXX	542P2SXXXX
			563P3P36	563S3S36	563P3S36	543P3P36	543S3S36	543P3S36
173S12	173PN12	173SN12	563P3P72	563S3S72	563P3S72	543P3P72	543S3S72	543P3S72
			563P3P144	563S3S144	563P3S144	543P3P144	543S3S144	543P3S144
173SXXX	173PNXXX	173SNXXX	563P3PXXXX	563S3SXXXX	563P3SXXXX	543P3PXXXX	543S3SXXXX	543P3SXXXX
			564P4P36	564S4S36	564P4S36	544P4P36	544S4S36	544P4S36
174S12	174PN12	174SN12	564P4P72	564S4S72	564P4S72	544P4P72	544S4S72	544P4S72
			564P4P144	564S4S144	564P4S144	544P4P144	544S4S144	544P4S144
174SXXX	174PNXXX	174SNXXX	564P4PXXXX	564S4SXXXX	564P4SXXXX	544P4PXXXX	544S4SXXXX	544P4SXXXX
			565P5P36	565S5S36	565P5S36	545P5P36	545S5S36	545P5S36
175S12	175PN12	175SN12	565P5P72	565S5S72	565P5S72	545P5P72	545S5S72	545P5S72
			565P5P144	565S5S144	565P5S144	545P5P144	545S5S144	545P5S144
175SXXX	175PNXXX	175SNXXX	565P5PXXXX	565S5SXXXX	565P5SXXXX	545P5PXXXX	545S5SXXXX	545P5SXXXX
			566P6P36	566S6S36	566P6S36	546P6P36	546S6S36	546P6S36
176S12	176PN12	176SN12	566P6P72	566S6S72	566P6S72	546P6P72	546S6S72	546P6S72
			566P6P144	566S6S144	566P6S144	546P6P144	546S6S144	546P6S144
176SXXX	176PNXXX	176SNXXX	566P6PXXXX	566S6SXXXX	566P6SXXXX	546P6PXXXX	546S6SXXXX	546P6SXXXX

XXXX – Indicates "overall length / lead length" in inches.
For mechanical, electrical and wiring sequence see pages 13-15.
90° assemblies have key position at 12 o'clock.

* Please visit the product pages on our website for the most up-to-date product information

SENSOR-LINK
MINI-MIZER® "A" Size

MOLDED CONNECTOR ASSEMBLIES

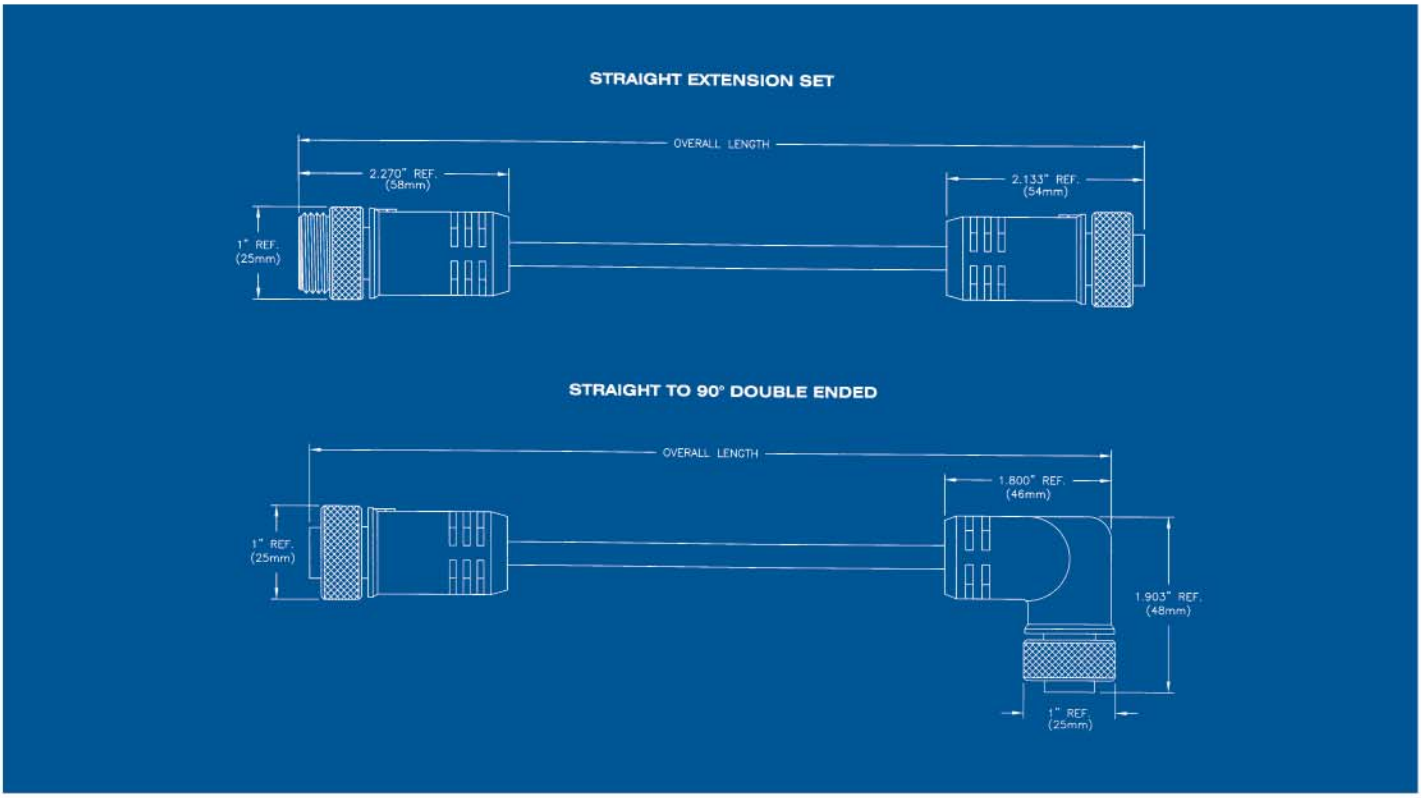

Face View Male	Rating	Overall Length Inches	Straight Extension Set Inline Male /Female Double Ended	Straight Extension Set Inline Female /Male Double Ended	Straight to 90° Male /Male Double Ended	Straight to 90° Female /Female Double Ended	Straight to 90° Male /Female Double Ended	Straight to 90° Female /Male Double Ended
	13A 600V	36	512P2S36	512S2P36	552P2P36	552S2S36	552P2S36	552S2P36
		72	512P2S72	512S2P72	552P2P72	552S2S72	552P2S72	552S2P72
		144	512P2S144	512S2P144	552P2P144	552S2S144	552P2S144	552S2P144
		Custom	512P2SXXXX	512S2PXXXX	552P2PXXXX	552S2SXXXX	552P2SXXXX	552S2PXXXX
	13A 600V	36	513P3S36	513S3P36	553P3P36	553S3S36	553P3S36	553S3P36
		72	513P3S72	513S3P72	553P3P72	553S3S72	553P3S72	553S3P72
		144	513P3S144	513S3P144	553P3P144	553S3S144	553P3S144	553S3P144
		Custom	513P3SXXXX	513S3PXXXX	553P3PXXXX	553S3SXXXX	553P3SXXXX	553S3PXXXX
	10A 600V	36	514P4S36	514S4P36	554P4P36	554S4S36	554P4S36	554S4P36
		72	514P4S72	514S4P72	554P4P72	554S4S72	554P4S72	554S4P72
		144	514P4S144	514S4P144	554P4P144	554S4S144	554P4S144	554S4P144
		Custom	514P4SXXXX	514S4PXXXX	554P4PXXXX	554S4SXXXX	554P4SXXXX	554S4PXXXX
	8A 600V	36	515P5S36	515S5P36	555P5P36	555S5S36	555P5S36	555S5P36
		72	515P5S72	515S5P72	555P5P72	555S5S72	555P5S72	555S5P72
		144	515P5S144	515S5P144	555P5P144	555S5S144	555P5S144	555S5P144
		Custom	515P5SXXXX	515S5PXXXX	555P5PXXXX	555S5SXXXX	555P5SXXXX	555S5PXXXX
	8A 600V	36	516P6S36	516S6P36	556P6P36	556S6S36	556P6S36	556S6P36
		72	516P6S72	516S6P72	556P6P72	556S6S72	556P6S72	556S6P72
		144	516P6S144	516S6P144	556P6P144	556S6S144	556P6S144	556S6P144
		Custom	516P6SXXXX	516S6PXXXX	556P6PXXXX	556S6SXXXX	556P6SXXXX	556S6PXXXX

XXXX – Indicates "overall length" in inches.
For mechanical, electrical and wiring sequence see pages 13-15.
90° assemblies have key position at 12 o'clock.

* Please visit the product pages on our website for the most up-to-date product information

Y - SPLITTER

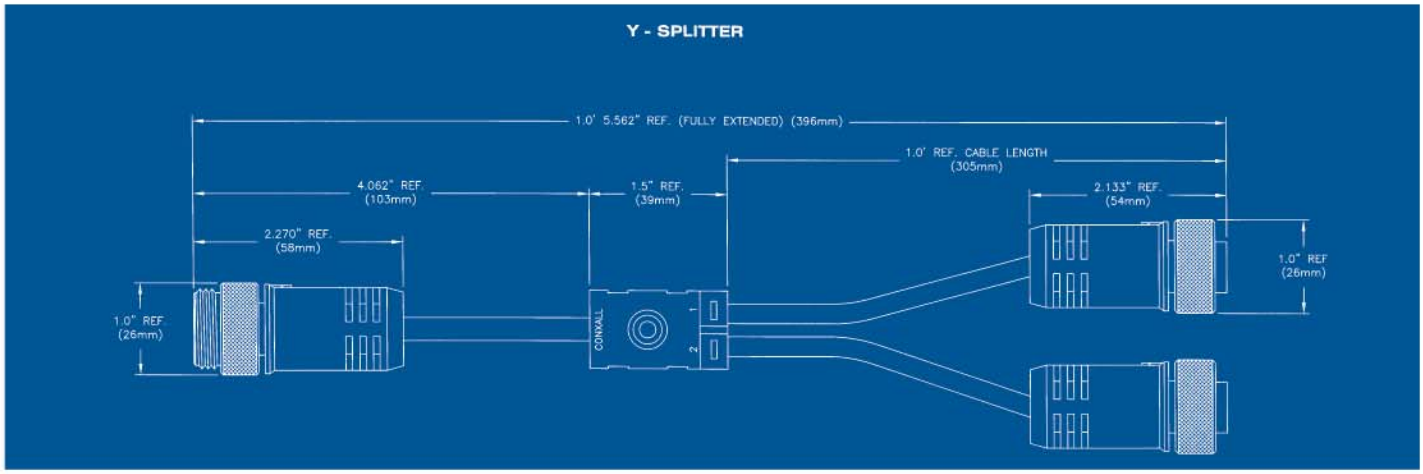

Face View Male	Rating	Wiring Diagram	Cable Length Inches	Y-Splitter Female /Female Female	Y-Splitter Male /Female Female
	10A 300V	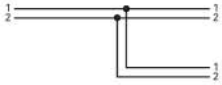	12 Custom	592S2S2S12 592S2S2SXXX	592P2S2S12 592P2S2SXXX
	10A 300V	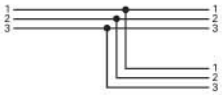	12 Custom	593S3S3S12 593S3S3SXXX	593P3S3S12 593P3S3SXXX
	8A 300V	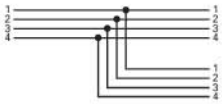	12 Custom	594S4S4S12 594S4S4SXXX	594P4S4S12 594P4S4SXXX
	6A 300V	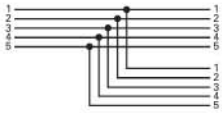	12 Custom	595S5S5S12 595S5S5SXXX	595P5S5S12 595P5S5SXXX
	6A 300V	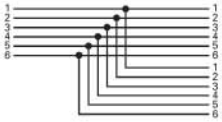	12 Custom	596S6S6S12 596S6S6SXXX	596P6S6S12 596P6S6SXXX

For insert combinations not shown - consult factory.
XXX – Indicates "cable length" in inches.
For mechanical, electrical and wiring sequence see pages 13-15.

Face View Male	Rating	Terminator Male	Terminator Female
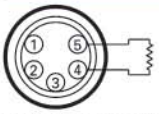	8A, 600V	535P	535S

Consult factory for other insert configurations.

Shorting Plug Male	Shorting Plug Female
52XPYY	52XSYY

X indicates number of contacts
YY indicates shorting positions
Shorting plug utilizes a jumper wire (no resistor)

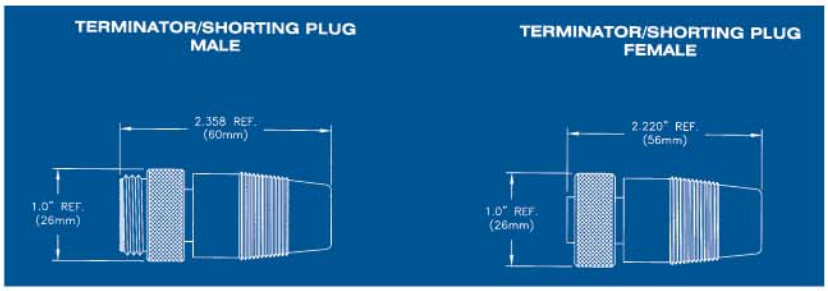

* Please visit the product pages on our website for the most up-to-date product information

SENSOR-LINK
MINI-MIZER® "A" Size

MOLDED CONNECTOR ASSEMBLIES

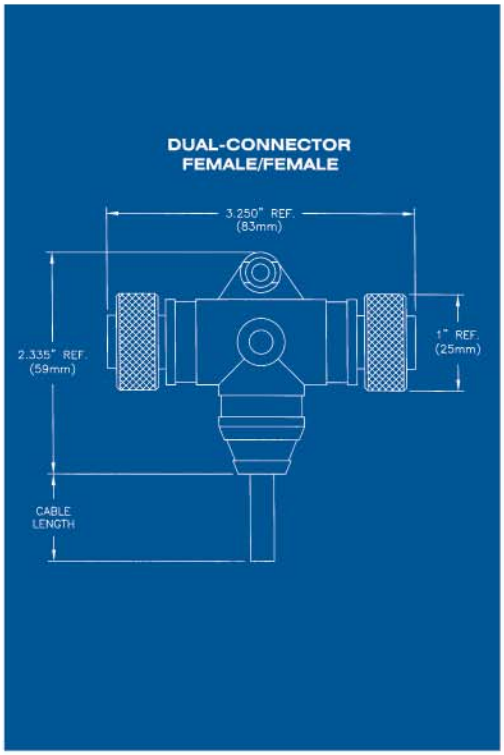

Face View Male	Rating	Wiring Diagram	Cable Length Inches	Dual Connector with Cable Male /Female	Dual Connector with Cable Female/Female
1, 2	13A 600V	1, 2 — WHT, BLK	36 Custom	572P2S36 572P2SXXX	572S2S36 572S2SXXX
1, 2, 3	13A 600V	1, 2, 3 — GRN, BLK, WHT	36 Custom	573P3S36 573P3SXXX	573S3S36 573S3SXXX
1, 4, 2, 3	10A 600V	1, 2, 3, 4 — BLK, WHT, RED, GRN	36 Custom	574P4S36 574P4SXXX	574S4S36 574S4SXXX
1, 5, 2, 4, 3	8A 600V	1, 2, 3, 4, 5 — WHT, RED, GRN, ORG, BLK	36 Custom	575P5S36 575P5SXXX	575S5S36 575S5SXXX
1, 5, 2, 6, 4, 3	8A 600V	1, 2, 3, 4, 5, 6 — WHT, RED, GRN, ORG, BLK, BLU	36 Custom	576P6S36 576P6SXXX	576S6S36 576S6SXXX

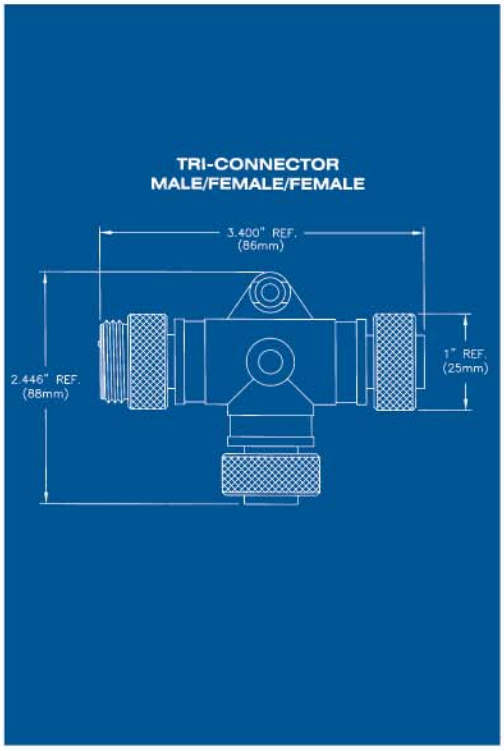

Face View Male	Rating	Wiring Diagram	Tri-Connector Male /Female Female	Tri-Connector Female/Female Female
1, 2	13A 600V	1, 2 — 1 2	582P2S2S	582S2S2S
1, 2, 3	13A 600V	1, 2, 3 — 1 2 3	583P3S3S	583S3S3S
1, 4, 2, 3	10A 600V	1, 2, 3, 4 — 1 2 3 4	584P4S4S	584S4S4S
1, 5, 2, 4, 3	8A 600V	1, 2, 3, 4, 5 — 1 2 3 4 5	585P5S5S	585S5S5S
1, 5, 2, 6, 4, 3	8A 600V	1, 2, 3, 4, 5, 6 — 1 2 3 4 5 6	586P6S6S	586S6S6S

XXX – Indicates "cable length" in inches.
For mechanical, electrical and wiring sequence see pages 13-15.
For insert combinations not shown - consult factory.

* Please visit the product pages on our website for the most up-to-date product information

SENSOR-LINK
MINI-MIZER® "A" Size EMI/RFI SHIELDED
MOLDED CONNECTOR ASSEMBLIES

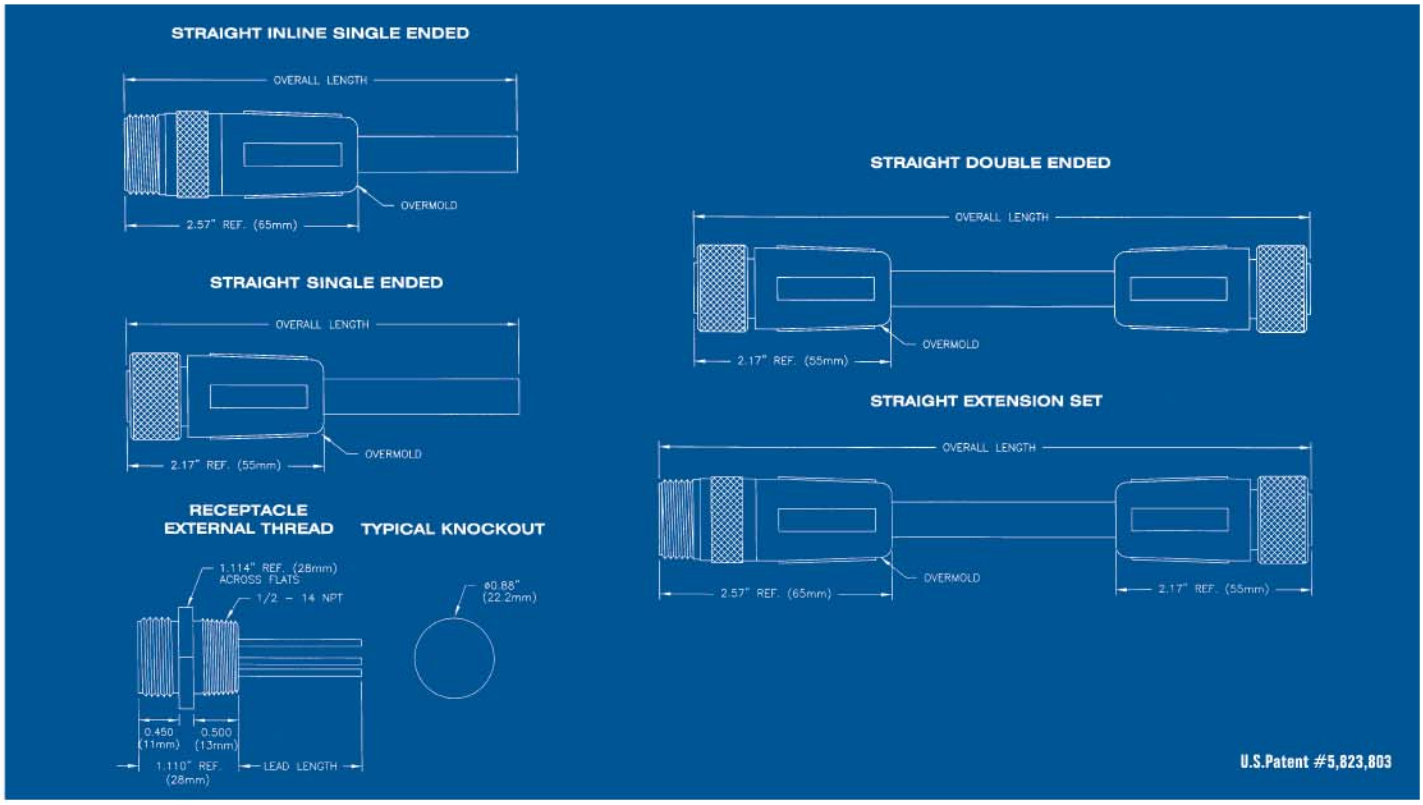

Face View Male	Rating	Overall Length Inches	Straight Male or Female Single Ended	Straight Inline Male or Female Single Ended	Straight Extension Set Male or Female Double Ended	Straight Male or Female Double Ended	Receptacle Male or Female 12 Inch leads
		36	SH162*36	SH192*36	SH512*2*36	SH562*2*36	
① ②	13A	72	SH162*72	SH192*72	SH512*2*72	SH562*2*72	SH172*12
	600V	144	SH162*144	SH192*144	SH512*2*144	SH562*2*144	
		Custom	SH162*XXXX	SH192*XXXX	SH512*2*XXXX	SH562*2*XXXX	SH172*XXX
		36	SH163*36	SH193*36	SH513*3*36	SH563*3*36	
① ② ③	13A	72	SH163*72	SH193*72	SH513*3*72	SH563*3*72	SH173*12
	600V	144	SH163*144	SH193*144	SH513*3*144	SH563*3*144	
		Custom	SH163*XXXX	SH193*XXXX	SH513*3*XXXX	SH563*3*XXXX	SH173*XXX
		36	SH164*36	SH194*36	SH514*4*36	SH564*4*36	
① ④ ② ③	10A	72	SH164*72	SH194*72	SH514*4*72	SH564*4*72	SH174*12
	600V	144	SH164*144	SH194*144	SH514*4*144	SH564*4*144	
		Custom	SH164*XXXX	SH194*XXXX	SH514*4*XXXX	SH564*4*XXXX	SH174*XXX
		36	SH165*36	SH195*36	SH515*5*36	SH565*5*36	
① ⑤ ② ④ ③	8A	72	SH165*72	SH195*72	SH515*5*72	SH565*5*72	SH175*12
	600V	144	SH165*144	SH195*144	SH515*5*144	SH565*5*144	
		Custom	SH165*XXXX	SH195*XXXX	SH515*5*XXXX	SH565*5*XXXX	SH175*XXX
		36	SH166*36	SH196*36	SH516*6*36	SH566*6*36	
① ⑤ ② ⑥ ④ ③	8A	72	SH166*72	SH196*72	SH516*6*72	SH566*6*72	SH176*12
	600V	144	SH166*144	SH196*144	SH516*6*144	SH566*6*144	
		Custom	SH166*XXXX	SH196*XXXX	SH516*6*XXXX	SH566*6*XXXX	SH176*XXX

"*" - Indicates Gender "P" = Male (Pins) or "S" = Female (Sockets).
XXXX – Indicates "overall length / cable length" in inches.
For mechanical, electrical and wiring sequence see pages 13-15.

* Please visit the product pages on our website for the most up-to-date product information

SENSOR-LINK
MINI-MIZER® "A" Size LED Cordsets

MOLDED CONNECTOR ASSEMBLIES

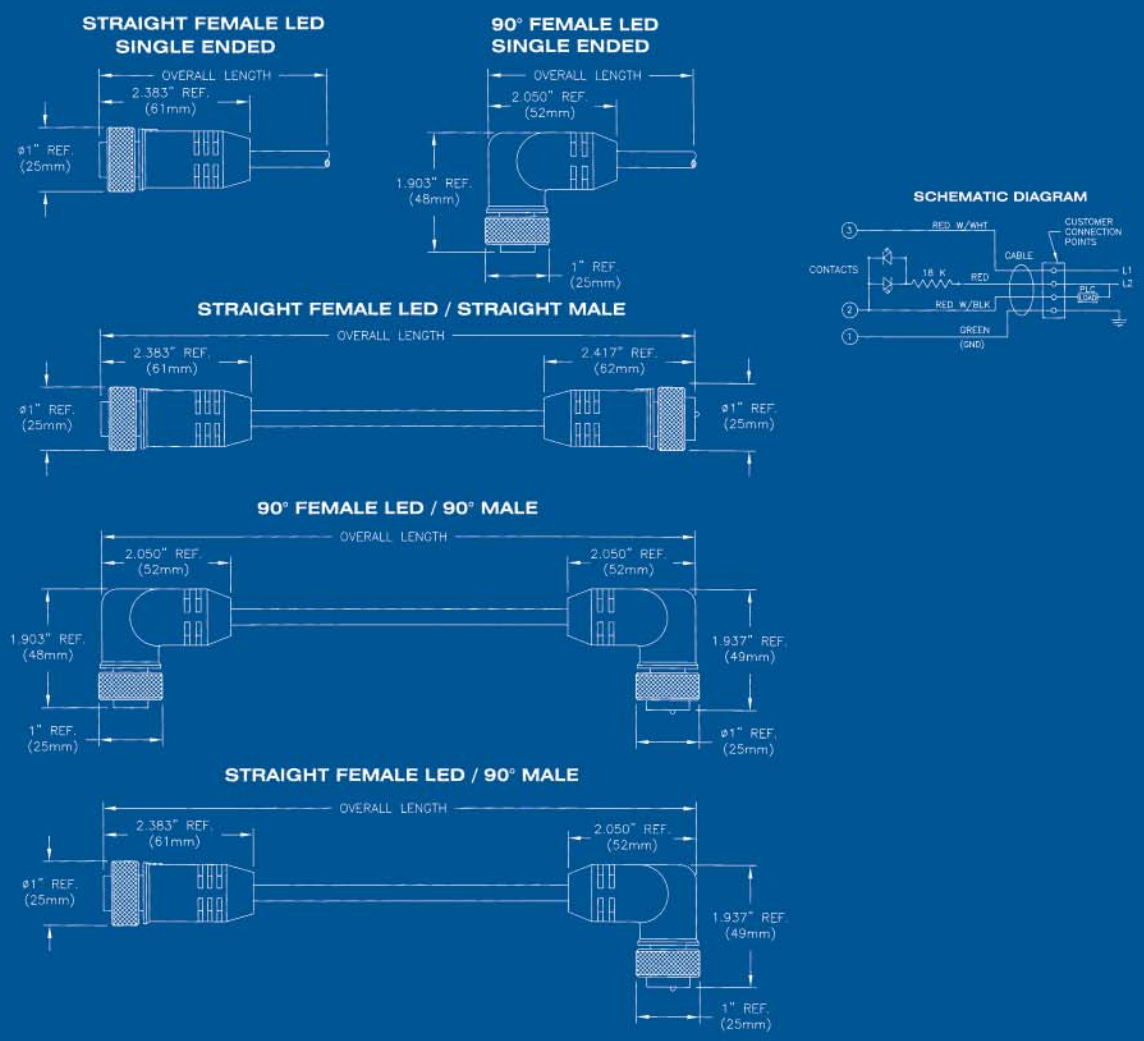

Face View Female	Rating	Overall Length Inches	Straight Female LED Single Ended	90° Female LED Single Ended	Straight Female LED/ Straight Male*	90° Female LED/ 90° Male*	Straight Female LED/ 90° Male*
		36	163SL36	183SL36	563S4PL36	543S4PL36	553S4PL36
	3A	72	163SL72	183SL72	563S4PL72	543S4PL72	553S4PL72
	120V	144	163SL144	183SL144	563S4PL144	543S4PL144	553S4PL144
		Custom	163SLXXXX	183SLXXXX	563S4PLXXXX	543S4PLXXXX	553S4PLXXXX

*On side "B", the male insert has 4 positions.
XXXX – Indicates "overall length" in inches.
For mechanical and electrical specifications see pages 14 & 15.
90° assemblies have key position at 12 o'clock.

* Please visit the product pages on our website for the most up-to-date product information

SENSOR-LINK MINI-MIZER®

MOLDED CONNECTOR ASSEMBLIES

STANDARD MINI-MIZER WIRING SEQUENCE

Panel Mounts and Cable Assemblies Conductor Color Code per Contact Position:

INDUSTRIAL "A & C" Size

2 CONTACTS

1.	WHT
2.	BLK

3 CONTACTS

1.	(GROUND) GRN
2.	BLK
3.	WHT

4 CONTACTS

1.	BLK
2.	WHT
3.	RED
4.	(GROUND) GRN

5 CONTACTS

1.	WHT
2.	RED
3.	(GROUND) GRN
4.	ORG
5.	BLK

6 CONTACTS

1.	WHT
2.	RED
3.	(GROUND) GRN
4.	ORG
5.	BLK
6.	BLU

9 CONTACTS

1.	ORG
2.	BLU
3.	RED/BLK
4.	GRN/BLK
5.	WHT
6.	RED
7.	(GROUND) GRN
8.	WHT/BLK
9.	BLK

10 CONTACTS

1.	ORG
2.	BLU
3.	WHT/BLK
4.	RED/BLK
5.	GRN/BLK
6.	ORG/BLK
7.	RED
8.	(GROUND) GRN
9.	BLK
10.	WHT

12 CONTACTS

1.	ORG
2.	BLU
3.	WHT/BLK
4.	RED/BLK
5.	GRN/BLK
6.	ORG/BLK
7.	BLU/BLK
8.	BLK/WHT
9.	(GROUND) GRN
10.	RED
11.	WHT
12.	BLK

19 CONTACTS

1.	VIO
2.	RED
3.	GRY
4.	RED/BLU
5.	BLU*
6.	GRN
7.	BRN*
8.	WHT/GRN
9.	WHT/YEL
10.	WHT/GRY
11.	BLK
12.	(GROUND) GRN/YEL*
13.	YEL/BRN
14.	BRN/GRN
15.	WHT
16.	YEL/BRN
17.	PNK
18.	GRY/BRN
19.	GRY/PNK

* 18 AWG wires
(other wires are 22 AWG)

AUTOMOTIVE "A" Size

3 CONTACTS

1.	(GROUND) GRN
2.	RED 2
3.	RED 3

4 CONTACTS

1.	RED 1
2.	RED 2
3.	RED 3
4.	(GROUND) GRN

5 CONTACTS

1.	RED 1
2.	RED 2
3.	(GROUND) GRN
4.	RED 4
5.	RED 5

For Automotive Color Code Insert "**A**" 164P**A**36

INTERNATIONAL "A" Size

2 CONTACTS

1.	BRN
2.	BLU

3 CONTACTS

1.	BLK
2.	BRN
3.	BLU

3 CONTACTS*

1.	GRN/YEL
2.	BRN
3.	BLU

4 CONTACTS

1.	BLK
2.	BLU
3.	BRN
4.	WHT

5 CONTACTS

1.	BLK
2.	BLU
3.	GRN/YEL
4.	BRN
5.	WHT

For International Color Code Insert "**I**" 164P**I**36

*For Second International Color Code Use "**IA**" 164P**IA**36

* Please visit the product pages on our website for the most up-to-date product information

SENSOR-LINK MINI-MIZER®

MOLDED CONNECTOR ASSEMBLIES

SENSOR LINK PRODUCT LINE

MINI-MIZER® SPECIFICATIONS

STANDARD PANEL MOUNTS:
- 16 AWG, 105C, 600V, PVC Hook-up Wire
- EPTR "Santoprene" Insert
- Lead Length 12 In.
- Epoxy Filled

STANDARD CABLE ASSEMBLIES:
- 16 AWG, PVC Yellow Jacketed Cable
- Insert Material
  - Polyurethane ("A" Size)
  - PVC ("C" Size)
- PVC Overmold
- Length 3, 6 and 12 Ft.

  Options
  - 16 AWG, Polyurethane Yellow Jacketed Cable
    For Polyurethane Cable add suffix "U"
  - 16 AWG, PVC & Polyurethane Yellow Jacketed Shielded Cable
    For Shielded Cable add suffix "S"
- Lengths other than standard
- DeviceNet Gray

  Add suffix "D1": Thin

  Add suffix "D2": Thick

Y SPLITTER ASSEMBLIES:
- 18 AWG, Polyurethane Yellow Jacketed Cable
- Polyurethane Insert
- Polyurethane Overmold

TRI CONNECTOR:
- 18 AWG Hook-up Wires
- Polyurethane Insert
- Polyurethane Overmold

  Options
  - DeviceNet Gray

  Add suffix "D1": Thin

  Add suffix "D2": Thick

DUAL CONNECTOR WITH CABLE:
- 18 AWG, Polyurethane Yellow Jacketed Cable
- Polyurethane Insert
- Polyurethane Overmold

TERMINATOR:
- Resistor 1/4 Watt 121 Ohm 1%
- Polyurethane Insert
- Polyurethane Overmold

LED CORDSET:
- 2 High Intensity (700-1,000 mcd) Extended Life Yellow LEDs. (Typical life @ ambient temperature is 100,000 hours)
- 18 AWG, PVC Yellow Jacketed Cable
- PVC Insert
- PVC, Clear Overmold (LED Side Only)

  Options
  - 18 AWG, Polyurethane Yellow Jacketed Cable
  - Polyurethane, Clear Overmold (LED Side Only)

* Please visit the product pages on our website for the most up-to-date product information

SENSOR LINK PRODUCT LINE

MINI-MIZER® SPECIFICATIONS

ELECTRICAL RATING:

VOLTAGE: 600V (NON-LED ASSEMBLIES)
120V (LED ASSEMBLIES)

CABLE ASSEMBLIES:

COUPLING NUT: Anodized Aluminum (Optional Nylon and Stainless Steel) Consult Factory

CONTACTS: Copper Alloy, Gold-plated

INSERT: Polyurethane ("A" Size)
PVC ("C" Size)

MOLDED HEADS: PVC or PUR per Cable Jacket Material

CABLE: 16 AWG: PVC Insulated, Fine Stranded Copper Conductors, Yellow Oil Resistant PVC Jacketed
600V, STO, 105°C.
18 AWG, 300V, 105°C for Y-splitter & Dual Connector with Cable
UL Recognized, CSA Certified

PANEL MOUNT ASSEMBLIES:

SHELLS: Anodized Aluminum (Optional Nylon and Stainless Steel) Consult Factory

CONTACTS: Copper Alloy, Gold-plated

INSERTS: Ethylene Propylene Thermoplastic Rubber "Santoprene"

WIRE: 16 AWG PVC Insulated, 600V
UL Recognized, CSA Certified

ENVIRONMENTAL:

PROTECTION: NEMA 6P, IP67 & IP68

OPERATING AMBIENT: -20° to 80°C

CERTIFICATIONS:

UL: UL Recognized, File No. E150822

CSA: CSA Certified, FILE No. 181200

EMI/RFI SHIELDING:

Meets or Exceeds IEC Directives:

IEC 1000-4-2	ESD, 5KV to 15KV in 2.5KV Steps
IEC 1000-4-3	RFI Immunity, 10V/m
IEC 1000-4-4	Fast Transient, 2K
IEC 1000-4-5	Surge, DC Immunity, 3.1KV
EN50141	Induced RF Immunity, 10V/m

* Please visit the product pages on our website for the most up-to-date product information

SENSOR-LINK
AC METAL MICRO-MIZER®
MOLDED CONNECTOR ASSEMBLIES

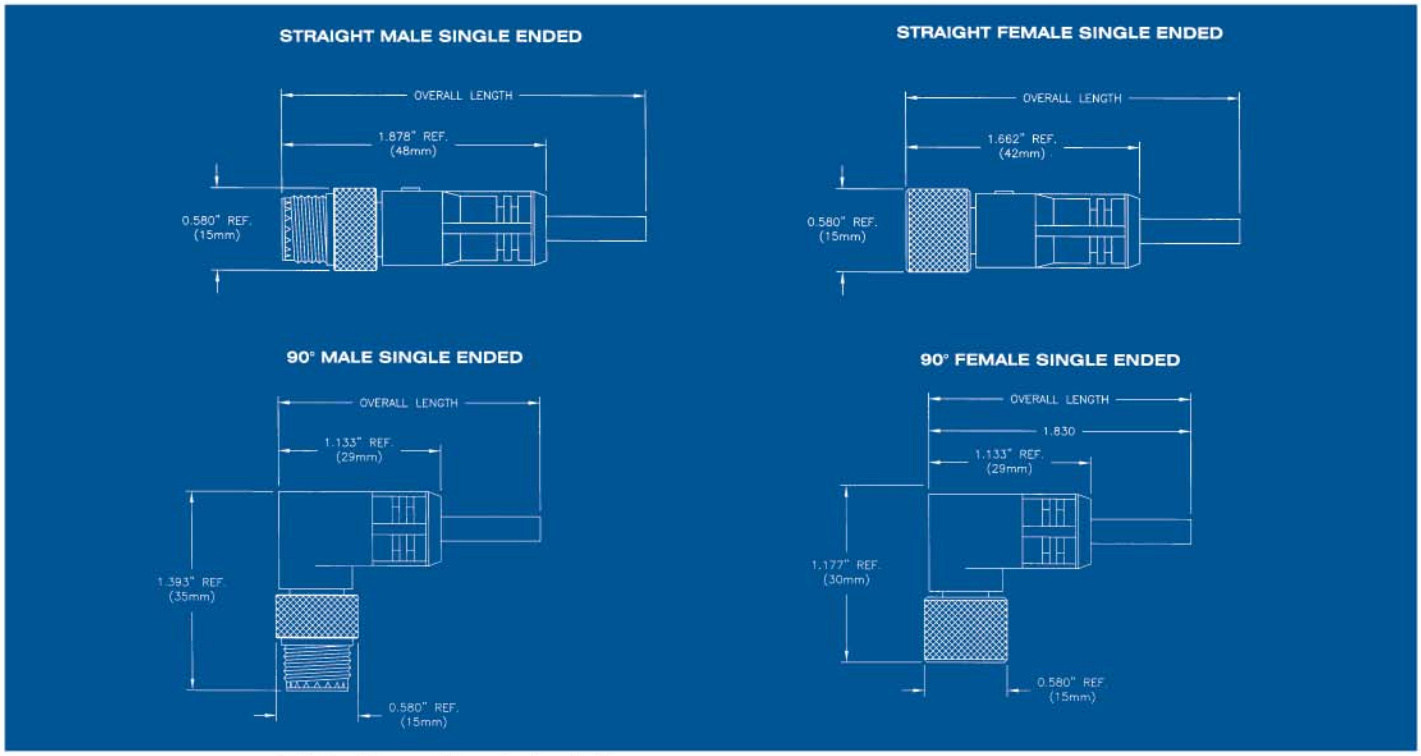

Anti-vibration coupling nuts standard.

Face View Male	Rating	Overall Length Inches	Straight Male Single Ended	Straight Female Single Ended	90° Male Single Ended	90° Female Single Ended
	3A 300V	36	402P36	402S36	462P36	462S36
		72	402P72	402S72	462P72	462S72
		144	402P144	402S144	462P144	462S144
		Custom	402PXXXX	402SXXXX	462PXXXX	462SXXXX
	3A 300V	36	403P36	403S36	463P36	463S36
		72	403P72	403S72	463P72	463S72
		144	403P144	403S144	463P144	463S144
		Custom	403PXXXX	403SXXXX	463PXXXX	463SXXXX
	3A 300V	36	404P36	404S36	464P36	464S36
		72	404P72	404S72	464P72	464S72
		144	404P144	404S144	464P144	464S144
		Custom	404PXXXX	404SXXXX	464PXXXX	464SXXXX
	3A 300V	36	405P36	405S36	465P36	465S36
		72	405P72	405S72	465P72	465S72
		144	405P144	405S144	465P144	465S144
		Custom	405PXXXX	405SXXXX	465PXXXX	465SXXXX
	3A 300V	36	406P36	406S36	466P36	466S36
		72	406P72	406S72	466P72	466S72
		144	406P144	406S144	466P144	466S144
		Custom	406PXXXX	406SXXXX	466PXXXX	466SXXXX

XXXX – Indicates "overall length" in inches.
For mechanical, electrical and wiring sequence see pages 28 & 29.
90° assemblies have major key position at 6 o'clock (in line with the cable).

* Please visit the product pages on our website for the most up-to-date product information

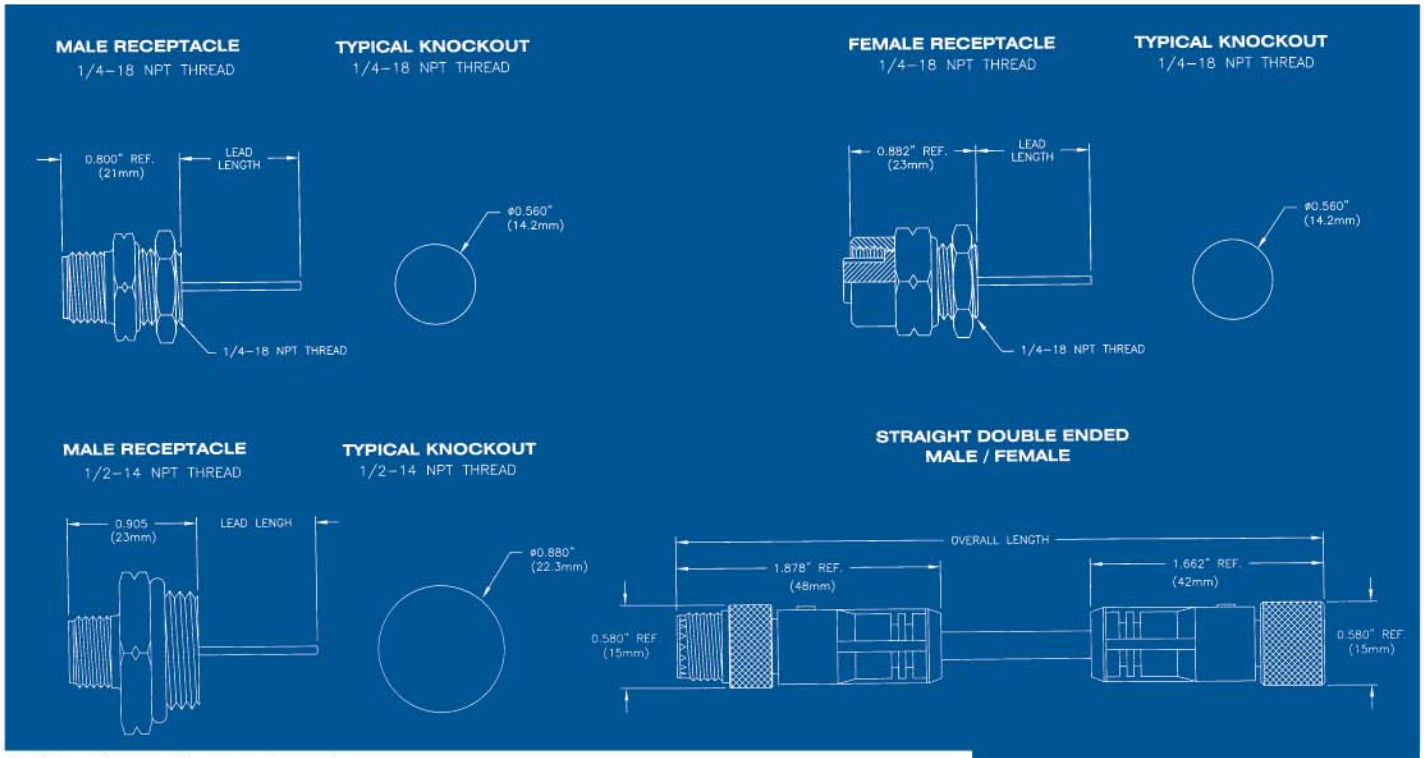

Anti-vibration coupling nuts standard.

Receptacle Male 1/4 - 18 NPT 12 Inch Leads	Receptacle Female 12 Inch Leads	Receptacle Male 1/2 - 14 NPT 12 Inch Leads	Straight Male /Male Double Ended	Straight Female /Female Double Ended	Straight Male /Female Double Ended
			472P2P36	472S2S36	472P2S36
412P12	412S12	412PA12	472P2P72	472S2S72	472P2S72
			472P2P144	472S2S144	472P2S144
412PXXX	412SXXX	412PAXXX	472P2PXXXX	472S2SXXXX	472P2SXXXX
			473P3P36	473S3S36	473P3S36
413P12	413S12	413PA12	473P3P72	473S3S72	473P3S72
			473P3P144	473S3S144	473P3S144
413PXXX	413SXXX	413PAXXX	473P3PXXXX	473S3SXXXX	473P3SXXXX
			474P4P36	474S4S36	474P4S36
414P12	414S12	414PA12	474P4P72	474S4S72	474P4S72
			474P4P144	474S4S144	474P4S144
414PXXX	414SXXX	414PAXXX	474P4PXXXX	474S4SXXXX	474P4SXXXX
			475P5P36	475S5S36	475P5S36
415P12	415S12	415PA12	475P5P72	475S5S72	475P5S72
			475P5P144	475S5S144	475P5S144
415PXXX	415SXXX	415PAXXX	475P5PXXXX	475S5SXXXX	475P5SXXXX
			476P6P36	476S6S36	476P6S36
416P12	416S12	416PA12	476P6P72	476S6S72	476P6S72
			476P6P144	476S6S144	476P6S144
416PXXX	416SXXX	416PAXXX	476P6PXXXX	476S6SXXXX	476P6SXXXX

XXXX – Indicates "overall length / lead length" in inches.
For mechanical, electrical and wiring sequence see pages 28 & 29.

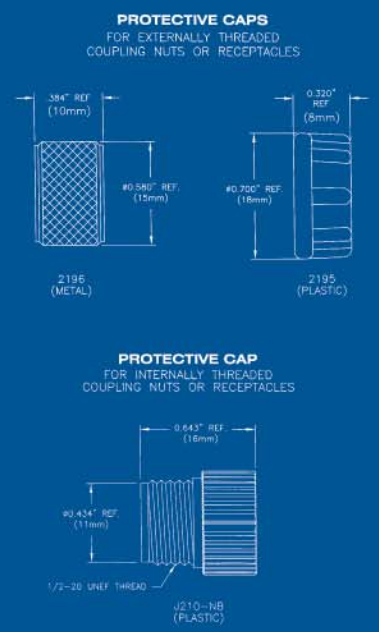

* Please visit the product pages on our website for the most up-to-date product information

SENSOR-LINK
AC METAL MICRO-MIZER®
MOLDED CONNECTOR ASSEMBLIES

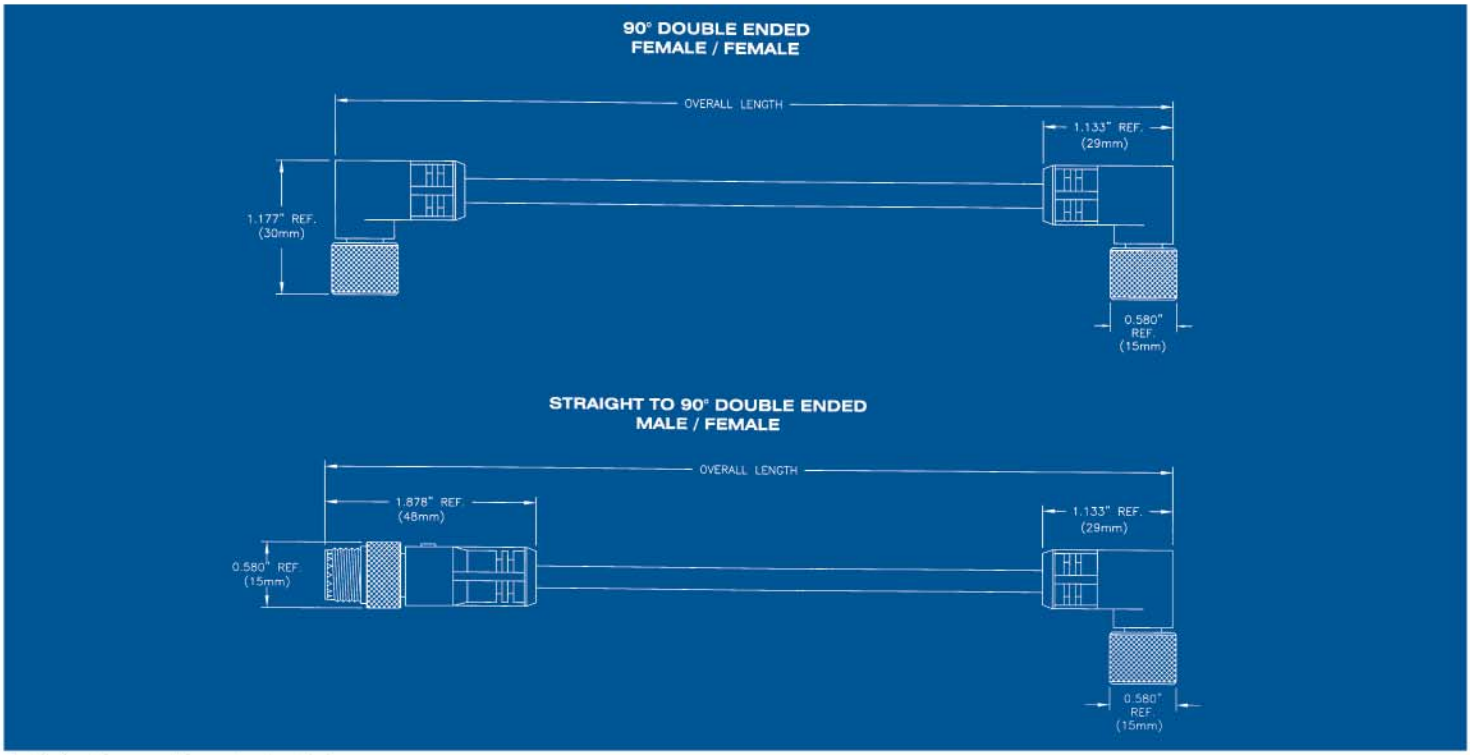

Anti-vibration coupling nuts standard.

Face View Male	Rating	Overall Length Inches	90° Male/Male Double Ended	90° Female/Female Double Ended	90° Male/Female Double Ended	Straight to 90° Male/Female Double Ended	Straight to 90° Female/Male Double Ended
	3A 300V	36	452P2P36	452S2S36	452P2S36	482P2S36	482S2P36
		72	452P2P72	452S2S72	452P2S72	482P2S72	482S2P72
		144	452P2P144	452S2S144	452P2S144	482P2S144	482S2P144
		Custom	452P2PXXXX	452S2SXXXX	452P2SXXXX	482P2SXXXX	482S2PXXXX
	3A 300V	36	453P3P36	453S3S36	453P3S36	483P3S36	483S3P36
		72	453P3P72	453S3S72	453P3S72	483P3S72	483S3P72
		144	453P3P144	453S3S144	453P3S144	483P3S144	483S3P144
		Custom	453P3PXXXX	453S3SXXXX	453P3SXXXX	483P3SXXXX	483S3PXXXX
	3A 300V	36	454P4P36	454S4S36	454P4S36	484P4S36	484S4P36
		72	454P4P72	454S4S72	454P4S72	484P4S72	484S4P72
		144	454P4P144	454S4S144	454P4S144	484P4S144	484S4P144
		Custom	454P4PXXXX	454S4SXXXX	454P4SXXXX	484P4SXXXX	484S4PXXXX
	3A 300V	36	455P5P36	455S5S36	455P5S36	485P5S36	485S5P36
		72	455P5P72	455S5S72	455P5S72	485P5S72	485S5P72
		144	455P5P144	455S5S144	455P5S144	485P5S144	485S5P144
		Custom	455P5PXXXX	455S5SXXXX	455P5SXXXX	485P5SXXXX	485S5PXXXX
	3A 300V	36	456P6P36	456S6S36	456P6S36	486P6S36	486S6P36
		72	456P6P72	456S6S72	456P6S72	486P6S72	486S6P72
		144	456P6P144	456S6S144	456P6S144	486P6S144	486S6P144
		Custom	456P6PXXXX	456S6SXXXX	456P6SXXXX	486P6SXXXX	486S6PXXXX

XXXX – Indicates "overall length" in inches.
For mechanical, electrical and wiring sequence see pages 28 & 29.
90° assemblies have major key position at 6 o'clock (in line with the cable).

SENSOR-LINK
AC METAL MICRO-MIZER®

MOLDED CONNECTOR ASSEMBLIES

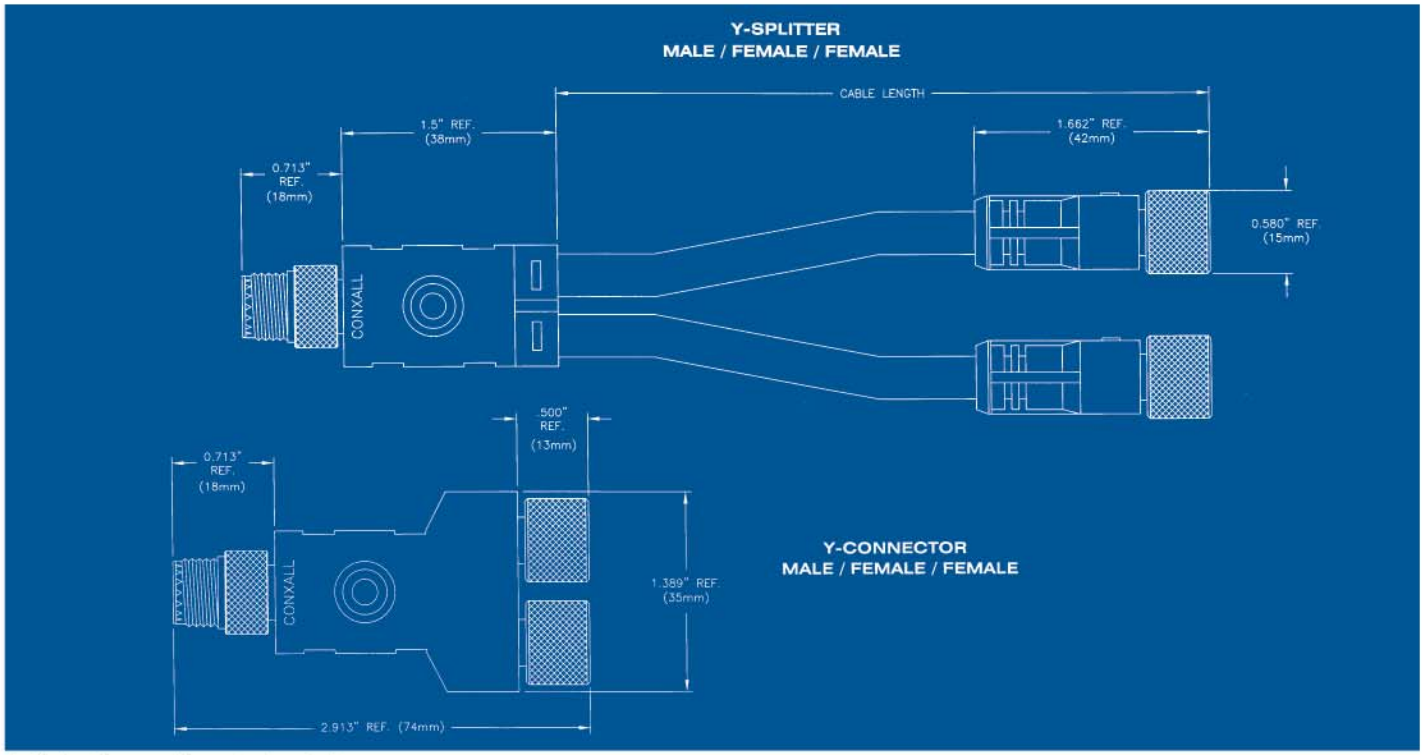

Anti-vibration coupling nuts standard.

Face View Male	Rating	Wiring Diagram	Y-Splitter Female /Female Female	Y-Splitter Male /Female Female	Y-Connector Female /Female Female	Y-Connector Male /Female Female
① ②	3A 300V		492S2S2S12 492S2S2SXXX	492P2S2S12 492P2S2SXXX	422S2S2S	422P2S2S
③ ② ①	3A 300V		493S3S3S12 493S3S3SXXX	493P3S3S12 493P3S3SXXX	423S3S3S	423P3S3S
② ③ ① ④	3A 300V		494S4S4S12 494S4S4SXXX	494P4S4S12 494P4S4SXXX	424S4S4S	424P4S4S
① ⑤ ② ④ ③	3A 300V		495S5S5S12 495S5S5SXXX	495P5S5S12 495P5S5SXXX	425S5S5S	425P5S5S
① ⑤ ② ⑥ ④ ③	3A 300V		496S6S6S12 496S6S6SXXX	496P6S6S12 496P6S6SXXX	426S6S6S	426P6S6S

XXX – Indicates "cable length" in inches, other than standard 12 inch length.
For mechanical, electrical and wiring sequence see pages 28 & 29.
For insert combinations not shown — consult factory.

* Please visit the product pages on our website for the most up-to-date product information

SENSOR-LINK
DC METAL MICRO-MIZER®

MOLDED CONNECTOR ASSEMBLIES

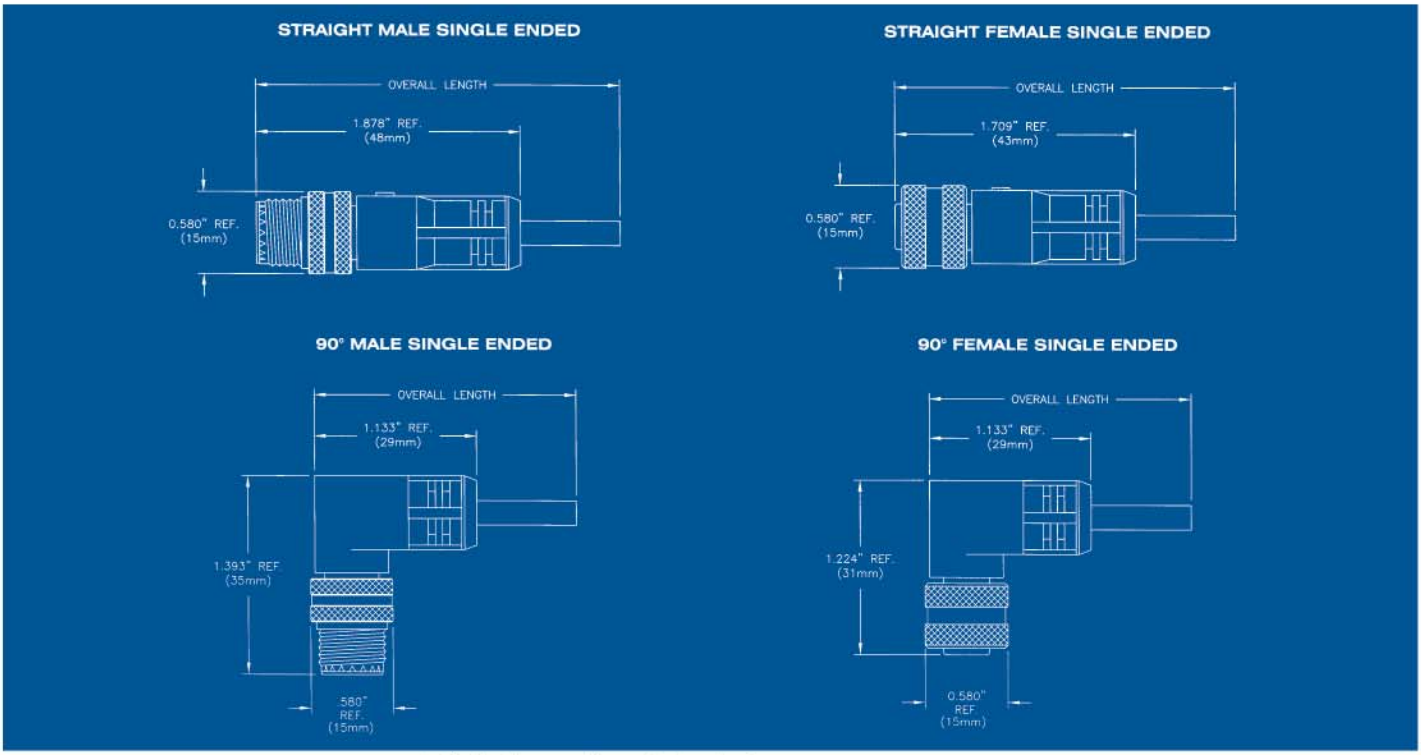

Anti-vibration coupling nuts standard.

Face View Male	Rating	Overall Length Meters	Straight Male Single Ended	Straight Female Single Ended	90° Male Single Ended	90° Female Single Ended
	3A 300V	1	302P1	302S1	342P1	342S1
		2	302P2	302S2	342P2	342S2
		4	302P4	302S4	342P4	342S4
		Custom	302PXX	302SXX	342PXX	342SXX
	3A 300V	1	303P1	303S1	343P1	343S1
		2	303P2	303S2	343P2	343S2
		4	303P4	303S4	343P4	343S4
		Custom	303PXX	303SXX	343PXX	343SXX
	3A 300V	1	304P1	304S1	344P1	344S1
		2	304P2	304S2	344P2	344S2
		4	304P4	304S4	344P4	344S4
		Custom	304PXX	304SXX	344PXX	344SXX
	3A 300V	1	305P1	305S1	345P1	345S1
		2	305P2	305S2	345P2	345S2
		4	305P4	305S4	345P4	345S4
		Custom	305PXX	305SXX	345PXX	345SXX
	2A 125V	1	308P1	308S1	348P1	348S1
		2	308P2	308S2	348P2	348S2
		4	308P4	308S4	348P4	348S4
		Custom	308PXX	308SXX	348PXX	348SXX

Consult Factory for 6 & 7 Pole

XX – Indicates "overall length" in meters.
For mechanical, electrical and wiring sequence see pages 28 & 29.
90° assemblies have key position at 45 degrees.

* Please visit the product pages on our website for the most up-to-date product information

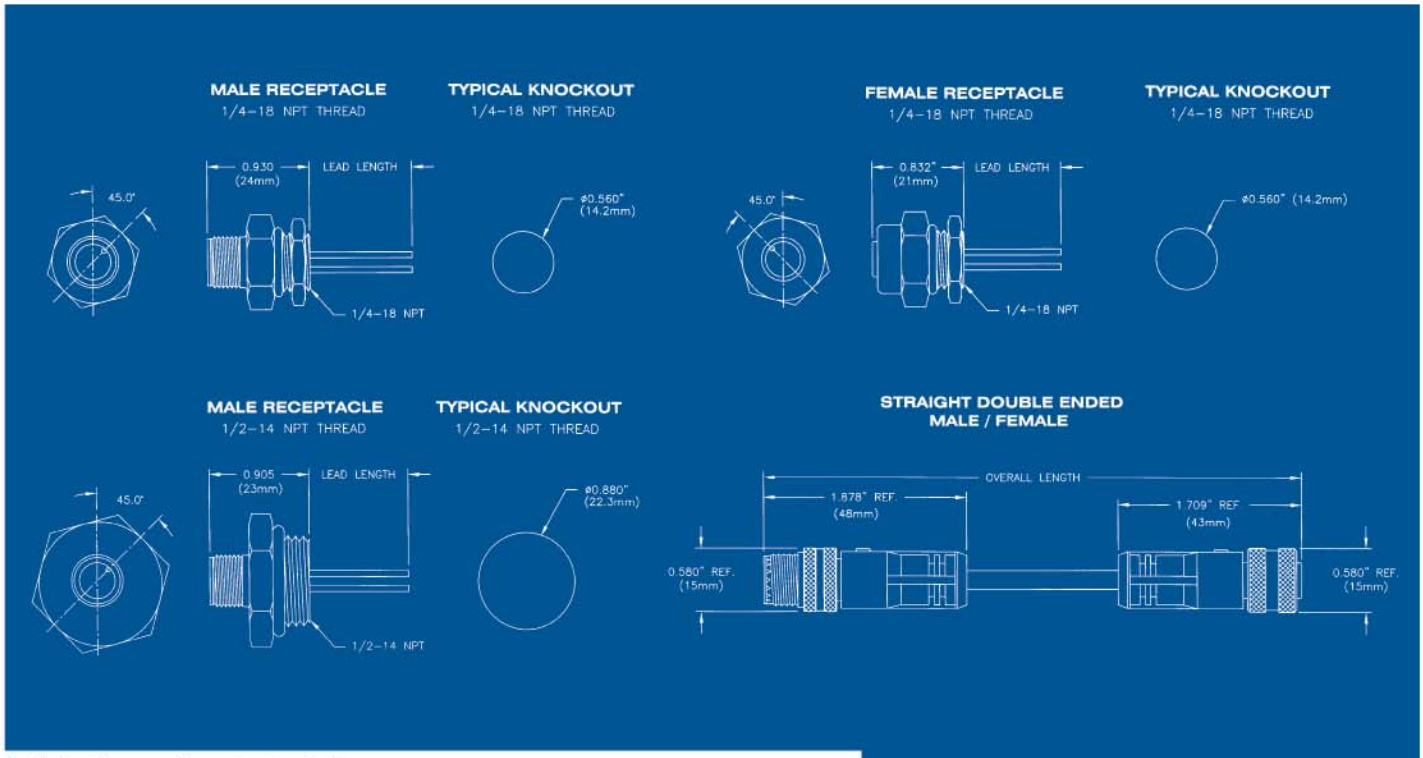

Anti-vibration coupling nuts standard.

Receptacle Male 1/4 - 18 NPT .3 Meter Leads	Receptacle Female .3 Meter Leads	Receptacle Male 1/2 - 14 NPT .3 Meter Leads	Straight Male /Male Double Ended	Straight Female /Female Double Ended	Straight Male /Female Double Ended
			372P2P1	372S2S1	372P2S1
312P.3	312S.3	312PA.3	372P2P2	372S2S2	372P2S2
			372P2P4	372S2S4	372P2S4
312PXX	31SXX	312PAXX	372P2PXX	372S2SXX	372P2SXX
			373P3P1	373S3S1	373P3S1
313P.3	313S.3	313PA.3	373P3P2	373S3S2	373P3S2
			373P3P4	373S3S4	373P3S4
313PXX	313SXX	313PAXX	373P3PXX	373S3SXX	373P3SXX
			374P4P1	374S4S1	374P4S1
314P.3	314S.3	314PA.3	374P4P2	374S4S2	374P4S2
			374P4P4	374S4S4	374P4S4
314PXX	314SXX	314PAXX	374P4PXX	374S4SXX	374P4SXX
			375P5P1	375S5S1	375P5S1
315P.3	315S.3	315PA.3	375P5P2	375S5S2	375P5S2
			375P5P4	375S5S4	375P5S4
315PXX	315SXX	315PAXX	375P5PXX	375S5SXX	375P5SXX
			378P8P1	378S8S1	378P8S1
318P.3	318S.3	318PA.3	378P8P2	378S8S2	378P8S2
			378P8P4	378S8S4	378P8S4
318PXX	318SXX	318PAXX	378P8PXX	378S8SXX	378P8SXX

PROTECTIVE CAPS
FOR EXTERNALLY THREADED COUPLING NUTS OR RECEPTACLES

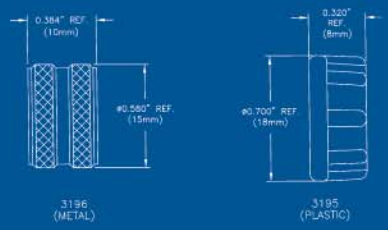

PROTECTIVE CAP
FOR INTERNALLY THREADED COUPLING NUTS OR RECEPTACLES

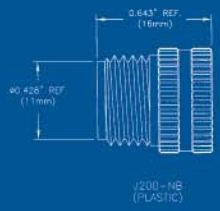

XX – Indicates "overall length / lead length" in meters.
For mechanical, electrical and wiring sequence see pages 28 & 29.

* Please visit the product pages on our website for the most up-to-date product information

SENSOR-LINK
DC METAL MICRO-MIZER®

MOLDED CONNECTOR ASSEMBLIES

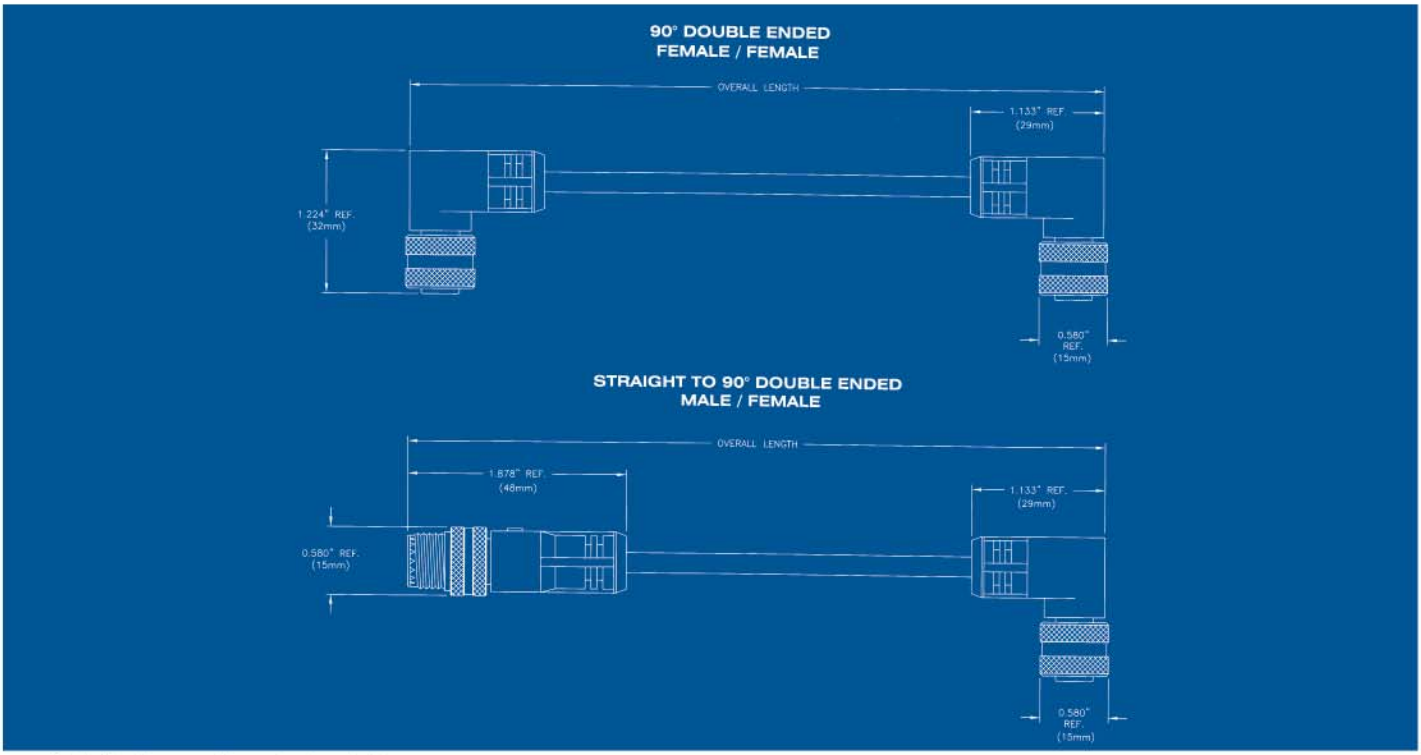

Anti-vibration coupling nuts standard.

Face View Male	Rating	Overall Length Meters	90° Male /Male Double Ended	90° Female /Female Double Ended	90° Male /Female Double Ended	Straight to 90° Male /Female Double Ended	Straight to 90° Female /Male Double Ended
	3A 300V	1	362P2P1	362S2S1	362P2S1	352P2S1	352S2P1
		2	362P2P2	362S2S2	362P2S2	352P2S2	352S2P2
		4	362P2P4	362S2S4	362P2S4	352P2S4	352S2P4
		Custom	362P2PXX	362S2SXX	362P2SXX	352P2SXX	352S2PXX
	3A 300V	1	363P3P1	363S3S1	363P3S1	353P3S1	353S3P1
		2	363P3P2	363S3S2	363P3S2	353P3S2	353S3P2
		4	363P3P4	363S3S4	363P3S4	353P3S4	353S3P4
		Custom	363P3PXX	363S3SXX	363P3SXX	353P3SXX	353S3PXX
	3A 300V	1	364P4P1	364S4S1	364P4S1	354P4S1	354S4P1
		2	364P4P2	364S4S2	364P4S2	354P4S2	354S4P2
		4	364P4P4	364S4S4	364P4S4	354P4S4	354S4P4
		Custom	364P4PXX	364S4SXX	364P4SXX	354P4SXX	354S4PXX
	3A 300V	1	365P5P1	365S5S1	365P5S1	355P5S1	355S5P1
		2	365P5P2	365S5S2	365P5S2	355P5S2	355S5P2
		4	365P5P4	365S5S4	365P5S4	355P5S4	355S5P4
		Custom	365P5PXX	365S5SXX	365P5SXX	355P5SXX	355S5PXX
	2A 125V	1	368P8P1	368S8S1	368P8S1	358P8S1	358S8P1
		2	368P8P2	368S8S2	368P8S2	358P8S2	358S8P2
		4	368P8P4	368S8S4	368P8S4	358P8S4	358S8P4
		Custom	368P8PXX	368S8SXX	368P8SXX	358P8SXX	358S8PXX

Consult Factory for 6 & 7 Pole

XX – Indicates "overall length" in meters.
For mechanical, electrical and wiring sequence see pages 28 & 29.
90° assemblies have key position at 45 degrees.

* Please visit the product pages on our website for the most up-to-date product information

SENSOR-LINK
DC METAL MICRO-MIZER®

MOLDED CONNECTOR ASSEMBLIES

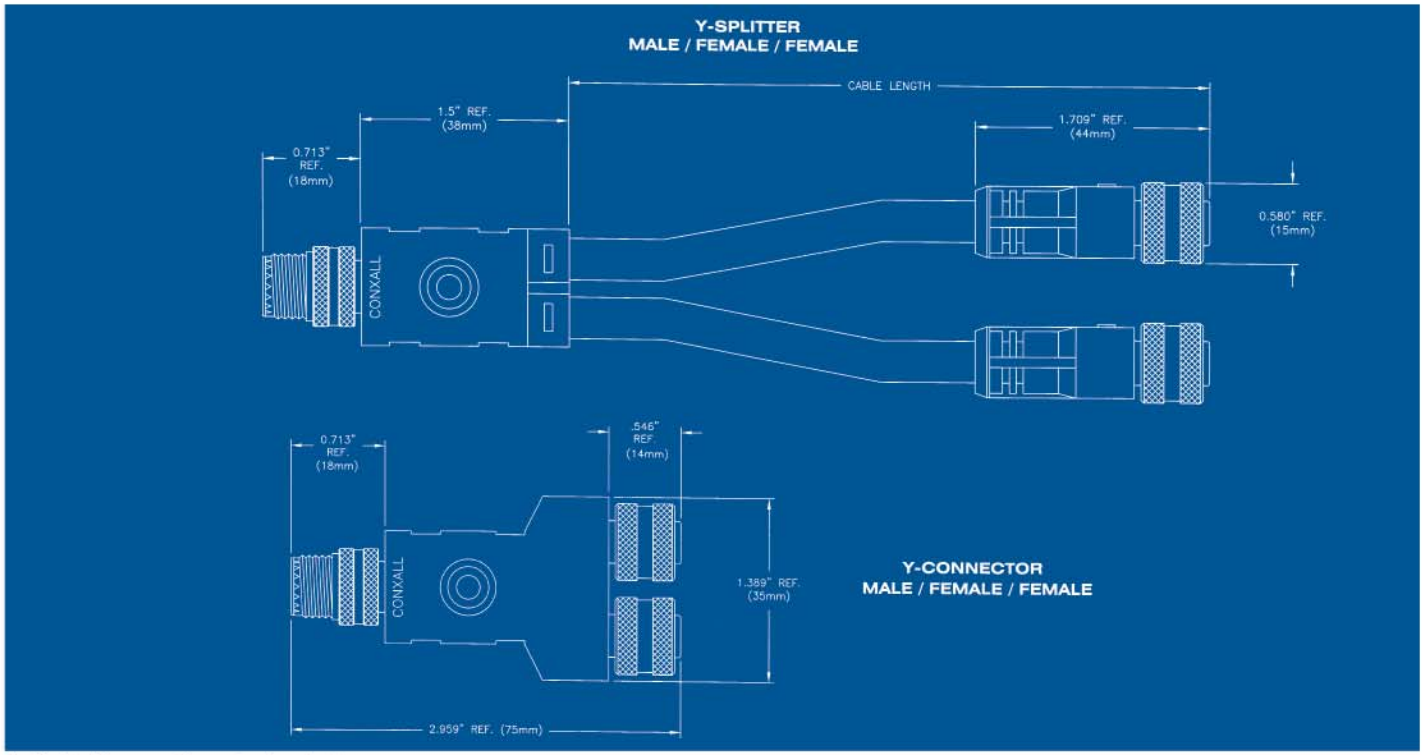

Anti-vibration coupling nuts standard.

Face View Male	Rating	Wiring Diagram	Y-Splitter Female /Female Female	Y-Splitter Male /Female Female	Y-Connector Female /Female Female	Y-Connector Male /Female Female
	3A 300V	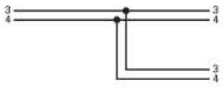	392S2S2S.3 392S2S2SXX	392P2S2S.3 392P2S2SXX	322S2S2S	322P2S2S
	3A 300V	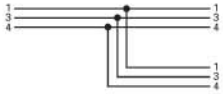	393S3S3S.3 393S3S3SXX	393P3S3S.3 393P3S3SXX	323S3S3S	323P3S3S
	3A 300V	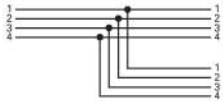	394S4S4S.3 394S4S4SXX	394P4S4S.3 394P4S4SXX	324S4S4S	324P4S4S
	3A 300V	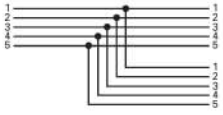	395S5S5S.3 395S5S5SXX	395P5S5S.3 395P5S5SXX	325S5S5S	325P5S5S
 Consult Factory for 6 & 7 Pole	2A 125V	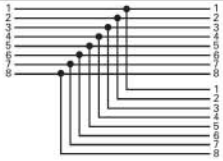	398S8S8S.3 398S8S8SXX	398P8S8S.3 398P8S8SXX	328S8S8S	328P8S8S

XX – Indicates "cable length" in meters, other than standard .3 meter length.
For mechanical, electrical and wiring sequence see pages 28 & 29.
For insert combinations not shown — consult factory.

* Please visit the product pages on our website for the most up-to-date product information

SINGLE KEY
PLASTIC MICRO-MIZER®

MOLDED CONNECTOR ASSEMBLIES

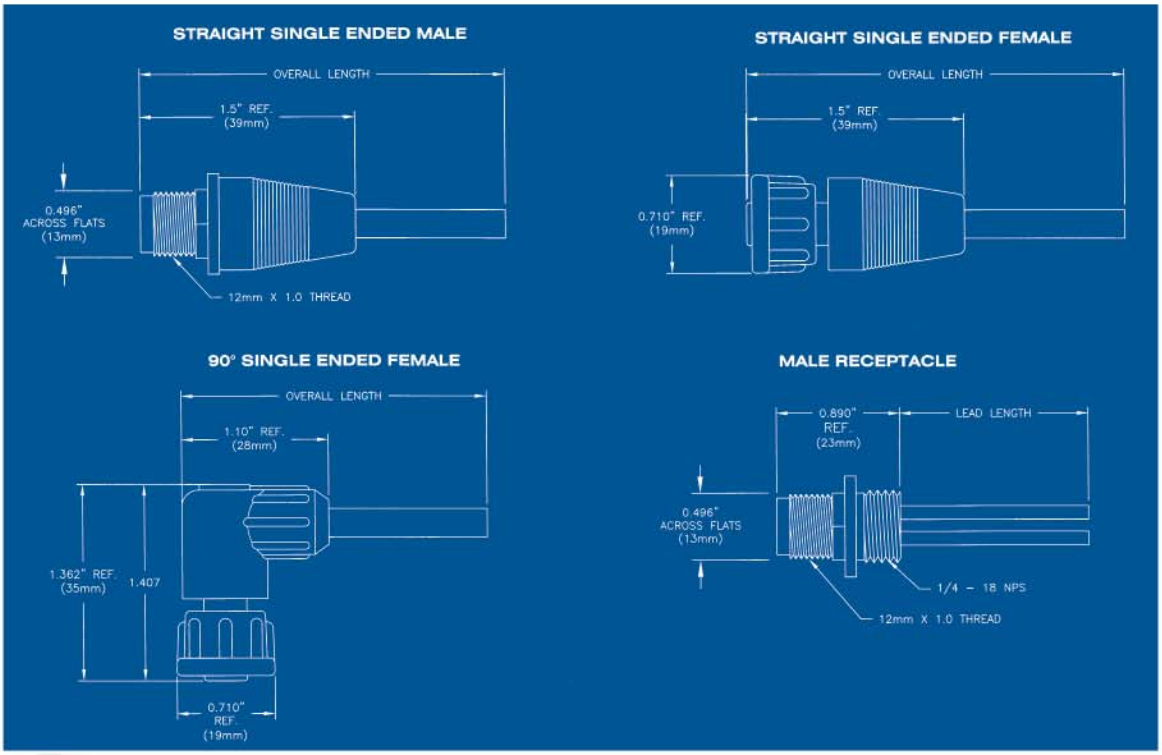

Face View Male	Rating	Overall Length Meters	Straight Male Single Ended	Straight Female Single Ended	90° Female Single Ended	Receptacle Male .3 Meter Leads
	3A 300V	1	202P1	202S1	232S1	
		2	202P2	202S2	232S2	212P.3
		4	202P4	202S4	232S4	
		Custom	202PXX	202SXX	232SXX	21PXX
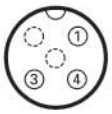	3A 300V	1	203P1	203S1	233S1	
		2	203P2	203S2	233S2	213P.3
		4	203P4	203S4	233S4	
		Custom	203PXX	203SXX	233SXX	213PXX
	3A 300V	1	204P1	204S1	234S1	
		2	204P2	204S2	234S2	214P.3
		4	204P4	204S4	234S4	
		Custom	204PXX	204SXX	234SXX	214PXX
	3A 300V	1	205P1	205S1	235S1	
		2	205P2	205S2	235S2	215P.3
		4	205P4	205S4	235S4	
		Custom	205PXX	205SXX	235SXX	215PXX

XX – Indicates "overall length / lead length" in meters.
For mechanical, electrical and wiring sequence see pages 28 & 29.

* Please visit the product pages on our website for the most up-to-date product information

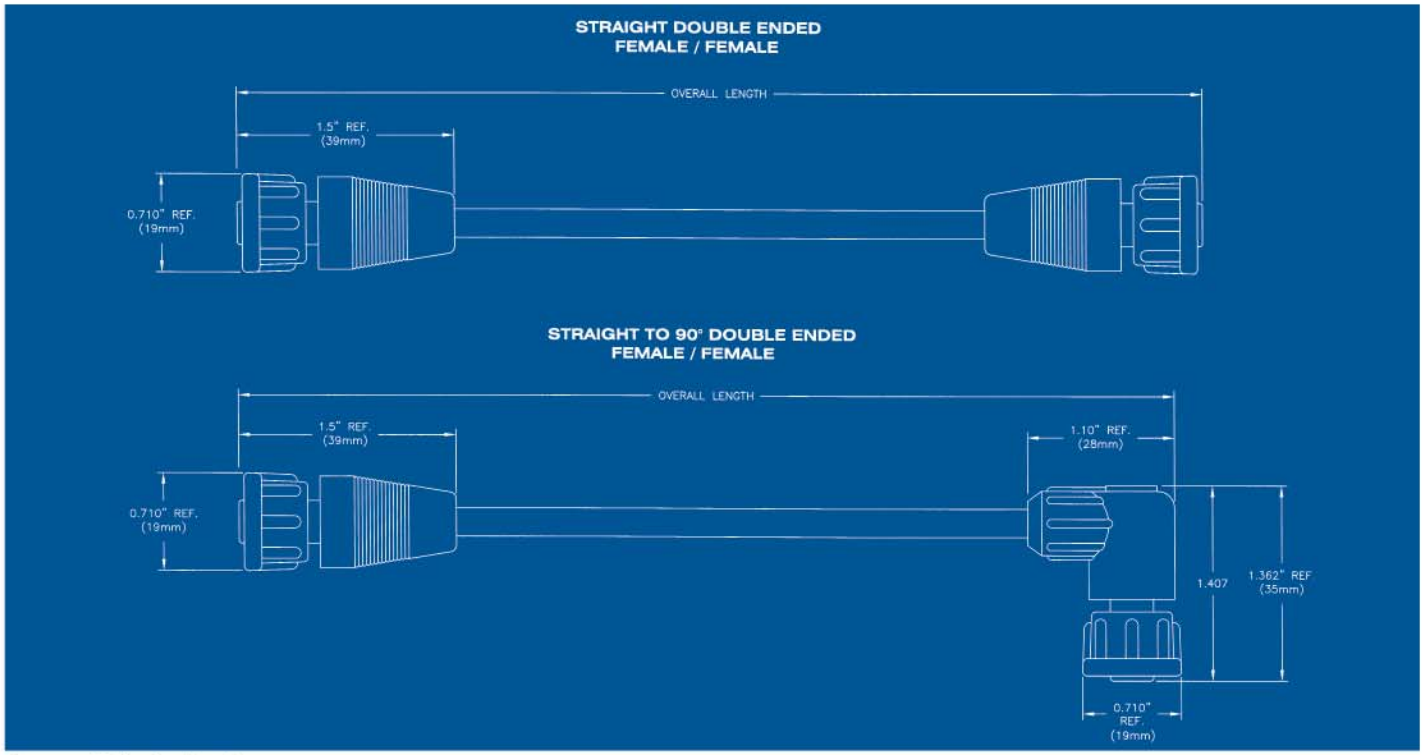

See page 19 for Sealing Covers.

Straight Female /Female Double Ended	Straight Male /Female Double Ended	Straight Male /Male Double Ended	90° Female /Female Double Ended	Straight to 90° Female /Female Double Ended	Straight to 90° Male /Female Double Ended
242S2S1	242P2S1	242P2P1	262S2S1	272S2S1	272P2S1
242S2S2	242P2S2	242P2P2	262S2S2	272S2S2	272P2S2
242S2S4	242P2S4	242P2P4	262S2S4	272S2S4	272P2S4
242S2SXX	242P2SXX	242P2PXX	262S2SXX	272S2SXX	272P2SXX
243S3S1	243P3S1	243P3P1	263S3S1	273S3S1	273P3S1
243S3S2	243P3S2	243P3P2	263S3S2	273S3S2	273P3S2
243S3S4	243P3S4	243P3P4	263S3S4	273S3S4	273P3S4
243S3SXX	243P3SXX	243P3PXX	263S3SXX	273S3SXX	273P3SXX
244S4S1	244P4S1	244P4P1	264S4S1	274S4S1	274P4S1
244S4S2	244P4S2	244P4P2	264S4S2	274S4S2	274P4S2
244S4S4	244P4S4	244P4P4	264S4S4	274S4S4	274P4S4
244S4SXX	244P4SXX	244P4PXX	264S4SXX	274S4SXX	274P4SXX
245S5S1	245P5S1	245P5P1	265S5S1	275S5S1	275P5S1
245S5S2	245P5S2	245P5P2	265S5S2	275S5S2	275P5S2
245S5S4	245P5S4	245P5P4	265S5S4	275S5S4	275P5S4
245S5SXX	245P5SXX	245P5PXX	265S5SXX	275S5SXX	275P5SXX

XX – Indicates "overall length" in meters.
For mechanical, electrical and wiring sequence see pages 28 & 29.

* Please visit the product pages on our website for the most up-to-date product information

SENSOR-LINK
DC METAL MICRO-MIZER® EMI/RFI SHIELDED
MOLDED CONNECTOR ASSEMBLIES

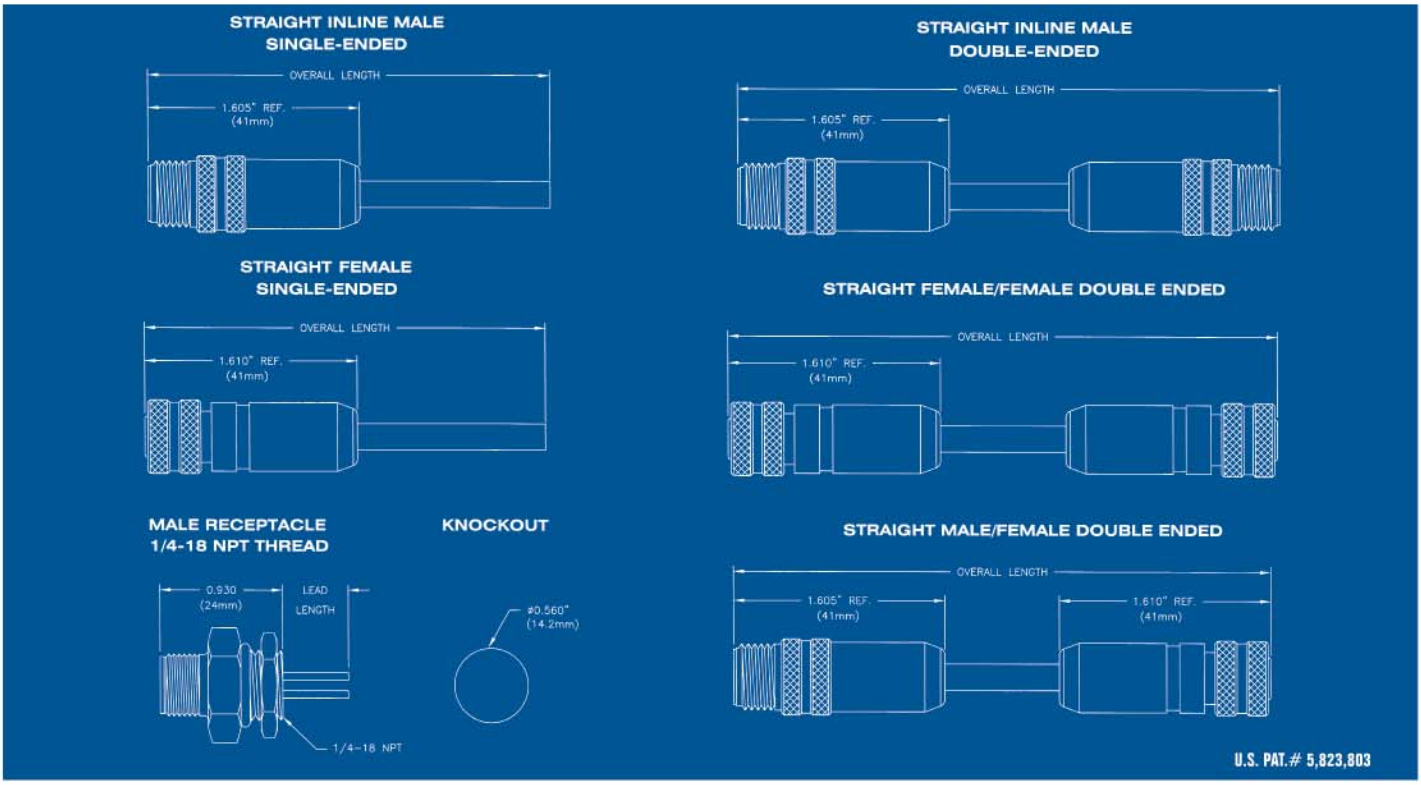

Face View Male	Rating	Overall Length Meters	Straight Inline Male Single Ended	Straight Female Single Ended	Straight Inline Male Double Ended	Straight Female/Female Double Ended	Straight Male/Female Double Ended	Receptacle Male .3 Meter Leads
	3A 300V	1	SH302P*1	SH302S1	SH372P2P*1	SH372S2S1	SH372P2S*1	SH312P.3
		2	SH302P*2	SH302S2	SH372P2P*2	SH372S2S2	SH372P2S*2	
		4	SH302P*4	SH302S4	SH372P2P*4	SH372S2S4	SH372P2S*4	
		Custom	SH302P*XX	SH302SXX	SH372P2P*XX	SH372S2SXX	SH372P2S*XX	SH312PXX
	3A 300V	1	SH303P*1	SH303S1	SH373P3P*1	SH373S3S1	SH373P3S*1	SH313P.3
		2	SH303P*2	SH303S2	SH373P3P*2	SH373S3S2	SH373P3S*2	
		4	SH303P*4	SH303S4	SH373P3P*4	SH373S3S4	SH373P3S*4	
		Custom	SH303P*XX	SH303SXX	SH373P3P*XX	SH373S3SXX	SH373P3S*XX	SH313PXX
	3A 300V	1	SH304P*1	SH304S1	SH374P4P*1	SH374S4S1	SH374P4S*1	SH314P.3
		2	SH304P*2	SH304S2	SH374P4P*2	SH374S4S2	SH374P4S*2	
		4	SH304P*4	SH304S4	SH374P4P*4	SH374S4S4	SH374P4S*4	
		Custom	SH304P*XX	SH304SXX	SH374P4P*XX	SH374S4SXX	SH374P4S*XX	SH314PXX
	3A 300V	1	SH305P*1	SH305S1	SH375P5P*1	SH375S5S1	SH375P5S*1	SH315P.3
		2	SH305P*2	SH305S2	SH375P5P*2	SH375S5S2	SH375P5S*2	
		4	SH305P*4	SH305S4	SH375P5P*4	SH375S5S4	SH375P5S*4	
		Custom	SH305P*XX	SH305SXX	SH375P5P*XX	SH375S5SXX	SH375P5S*XX	SH315PXX
Consult Factory for 6 & 7 Pole	2A 125V	1	SH308P*1	SH308S1	SH378P8P*1	SH378S8S1	SH378P8S*1	SH318P.3
		2	SH308P*2	SH308S2	SH378P8P*2	SH378S8S2	SH378P8S*2	
		4	SH308P*4	SH308S4	SH378P8P*4	SH378S8S4	SH378P8S*4	
		Custom	SH308P*XX	SH308SXX	SH378P8P*XX	SH378S8SXX	SH378P8S*XX	SH318PXX

XX – Indicates "overall length" in meters.
For mechanical, electrical and wiring sequence see pages 28 & 29.
* Insert an "R" for Rotating Male Coupling Nut. (Blank is standard for fixed nut.)

SENSOR-LINK
DC METAL MICRO-MIZER® LED CORDSETS

MOLDED CONNECTOR ASSEMBLIES

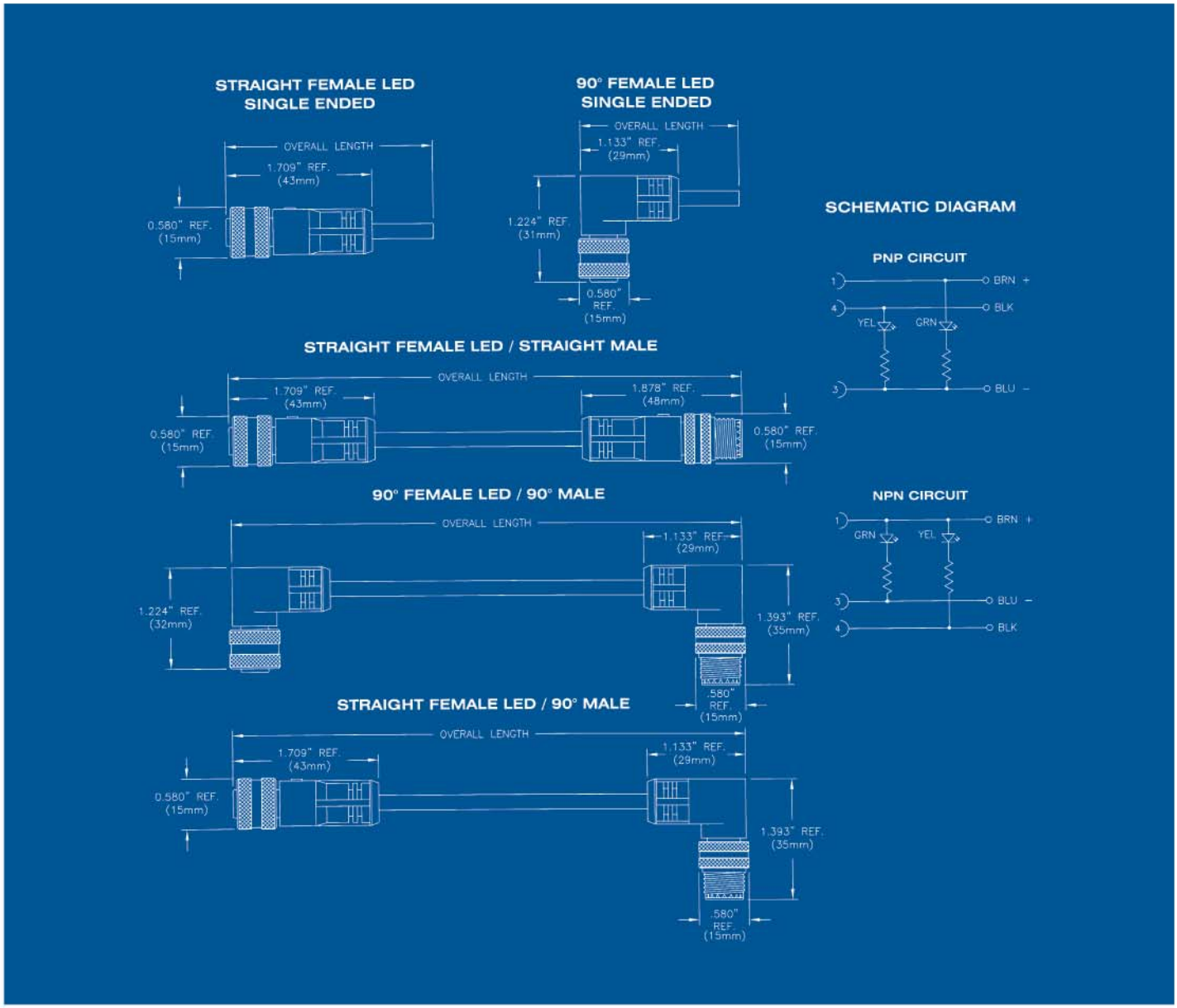

Face View Female	Circuit Type	Rating	Overall Length Meters	Straight Inline Male Single Ended	Straight Female Single Ended	Straight Inline Male Double Ended	Straight Female/Female Double Ended	Straight Male/Female Double Ended
	PNP	3A	1	303SL1PNP	343SL1PNP	373S4PL1PNP	363S4PL1PNP	353S4PL1PNP
			2	303SL2PNP	343SL2PNP	373S4PL2PNP	363S4PL2PNP	353S4PL2PNP
		10 to 30V DC	4	303SL4PNP	343SL4PNP	373S4PL4PNP	363S4PL4PNP	353S4PL4PNP
			Custom	303SLXXPNP	343SLXXPNP	373S4PLXXPNP	363S4PLXXPNP	353S4PLXXPNP
	NPN	3A	1	303SL1NPN	343SL1NPN	373S4PL1NPN	363S4PL1NPN	353S4PL1NPN
			2	303SL2NPN	343SL2NPN	373S4PL2NPN	363S4PL2NPN	353S4PL2NPN
		10 to 30V DC	4	303SL4NPN	343SL4NPN	373S4PL4NPN	363S4PL4NPN	353S4PL4NPN
			Custom	303SLXXNPN	343SLXXNPN	373S4PLXXNPN	363S4PLXXNPN	353S4PLXXNPN

XX – Indicates "overall length" in meters.
Note: Only three of the four positions of the insert are being utilized. Position 2 is a "dummy" contact.
For mechanical and electrical specifications see pages 28 & 29.
90° assemblies have key position at 45 degrees.

* Please visit the product pages on our website for the most up-to-date product information

SENSOR-LINK MICRO-MIZER®

MOLDED CONNECTOR ASSEMBLIES

STANDARD MINI-MIZER WIRING SEQUENCE

Panel Mounts and Cable Assemblies Conductor Color Code per Contact Position:

DC

2 CONTACTS

3.	BRN
4.	BLU

3 CONTACTS

1.	BRN
3.	BLU
4.	BLK

4 CONTACTS

1.	BRN
2.	WHT
3.	BLU
4.	BLK

5 CONTACTS

1.	BRN
2.	WHT
3.	BLU
4.	BLK
5.	GRY

8 CONTACTS

1.	WHT
2.	BRN
3.	GRN
4.	YEL
5.	GRY
6.	PINK
7.	BLU
8.	RED

AC

2 CONTACTS

1.	BRN
2.	BLU

3 CONTACTS

1.	GRN
2.	RED/BLK
3.	RED/WHT

4 CONTACTS

1.	RED/BLK
2.	RED/WHT
3.	RED
4.	GRN

5 CONTACTS

1.	RED/WHT
2.	RED
3.	GRN
4.	RED/YEL
5.	RED/BLK

6 CONTACTS

1.	RED/WHT
2.	RED
3.	GRN
4.	RED/YEL
5.	RED/BLK
6.	RED/BLU

SENSOR LINK PRODUCT LINE — MICRO-MIZER® SPECIFICATIONS

STANDARD PANEL MOUNTS:

- 22 AWG, 80°C, 300V, PVC Hook-up Wire
- Nylon Insert
- Lead Length 12 In.
- Epoxy Filled

STANDARD AC & DC METAL:

- 22 AWG, PVC Yellow Jacketed Cable
- Nylon Insert (Black for AC, Yellow for DC)
- PVC, Yellow Overmold
- Length 3, 6 and 12 Ft. for AC 1, 2 and 4 Meters for DC

  Options
  - 22 AWG, Polyurethane Yellow Jacketed Cable
    For polyurethane cable add suffix "U"
  - 22 AWG, PVC & Polyurethane Yellow Jacketed Shielded Cable
    For Shielded Cable add suffix "S"
- Lengths other than standard

STANDARD SINGLE KEY PLASTIC:

- 22 AWG, PVC Yellow Jacketed Cable
- Nylon, Black Insert
- PVC, Black Overmold
- Length 1, 2 and 4 Meters

  Options
  - 22 AWG, Polyurethane Yellow Jacketed Cable
    For polyurethane cable add suffix "U"
  - 22 AWG, PVC & Polyurethane Yellow Jacketed Shielded Cable
    For Shielded Cable add suffix "S"
- Lengths other than standard

Y-SPLITTER ASSEMBLIES:

- 22 AWG, PVC Yellow Jacketed Cable
- Nylon Insert
- PVC Overmold

  Options
  - 22 AWG, Polyurethane Yellow Jacketed Cable

DC LED CORDSETS:

- 1 Green & 1 Yellow Extended Life LEDs (Typical life @ abmient temperature is 100,000 hours.)
- PNP or NPN
- 22 AWG, PVC Yellow Jacketed Cable
- Nylon Insert
- PVC, Clear Overmold

  Options
  - 22 AWG, Polyurethane Yellow Jacketed Cable
  - Polyurethane, Clear Overmold

* Please visit the product pages on our website for the most up-to-date product information

SENSOR LINK PRODUCT LINE

MICRO-MIZER® AC/DC METAL AND PLASTIC

ELECTRICAL RATING

VOLTAGE: **Metal/Plastic** (Non-LED Assemblies) - 300V
Metal (LED Assemblies) - 10-30V DC

CABLE ASSEMBLIES

COUPLING NUT: **Metal-**Anodized Aluminum
Plastic-Nylon
Optional-Nickel-plated Brass or Stainless Steel (Consult Factory)

CONTACTS: **Metal/Plastic-**Copper Alloy, Gold-plated

INSERT: **Metal/Plastic-**Nylon

MOLDED HEADS: **Metal/Plastic-**PVC

O-RINGS: **Metal/Plastic-**Viton

CABLE: **Metal/Plastic-**22 AWG: PVC Insulated, Fine Stranded Copper Conductors, Yellow Oil Resistant PVC Jacketed 300V, ST, 105°C. UL Recognized, CSA Certified

PANEL MOUNT ASSEMBLIES

SHELLS: **Metal-**Anodized Aluminum
Plastic-Nylon
Optional-Nickel-plated Brass (Consult Factory)

CONTACTS: **Metal/Plastic-**Copper Alloy, Gold-plated

INSERTS: **Metal-**Nylon

WIRE: **Metal/Plastic-**22 AWG PVC Insulated, 300V UL Recognized, CSA Certified

ENVIRONMENTAL

PROTECTION: **Metal/Plastic-**NEMA 6P, IP67 & IP68

OPERATING AMBIENT: **Metal/Plastic-**-20° to 80°C

CERTIFICATIONS

UL: **Metal/Plastic-**UL Recognized, File No. E150822

cUL: **Metal/Plastic-**Canadian UL Recognized, File No. E150822

CSA: **Metal/Plastic-**CSA Certified File No. 181200

* Please visit the product pages on our website for the most up-to-date product information

SENSOR-LINK NANO-MIZER®

MOLDED CONNECTOR ASSEMBLIES

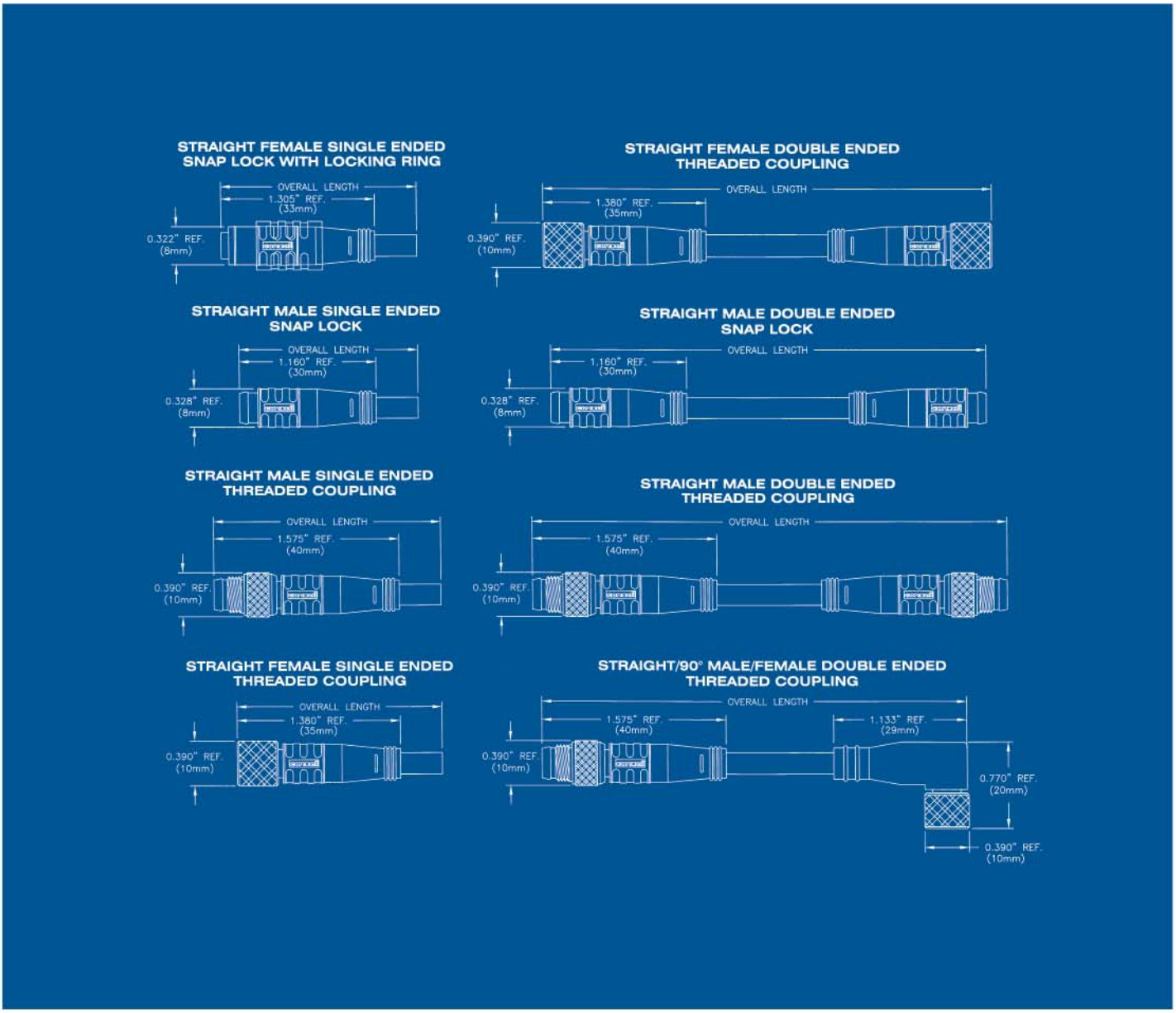

Coupling Options			Snap Lock Threaded	Snap Lock w/Ring Snap Lock Threaded	Snap Lock w/Ring Snap Lock Threaded			Snap Lock Threaded
Face View Male	Rating	Overall Length Meters	Straight Male Single Ended	Straight Female Single Ended	90° Female Single Ended	Receptacle Male .3 Meter Lead	Receptacle Female .3 Meter Lead	Straight Male/Male Double Ended
	4 A 300V	2	603P*2	603S*2*	653S*2*			673P3P*2
		5	603P*5	603S*5*	653S*5*	613P.3	613S.3	673P3P*5
		6	603P*6	603S*6*	653S*6*			673P3P*6
		Custom	603P*XX	603S*XX*	653S*XX*	613PXX	613SXX	673P3P*XX
	4 A 300V	2	604P*2	604S*2*	654S*2*			674P4P*2
		5	604P*5	604S*5*	654S*5*	614P.3	614S.3	674P4P*5
		6	604P*6	604S*6*	654S*6*			674P4P*6
		Custom	604P*XX	604S*XX*	654S*XX*	614PXX	614SXX	674P4P*XX

For mechanical, electrical and wiring sequence see page 33.

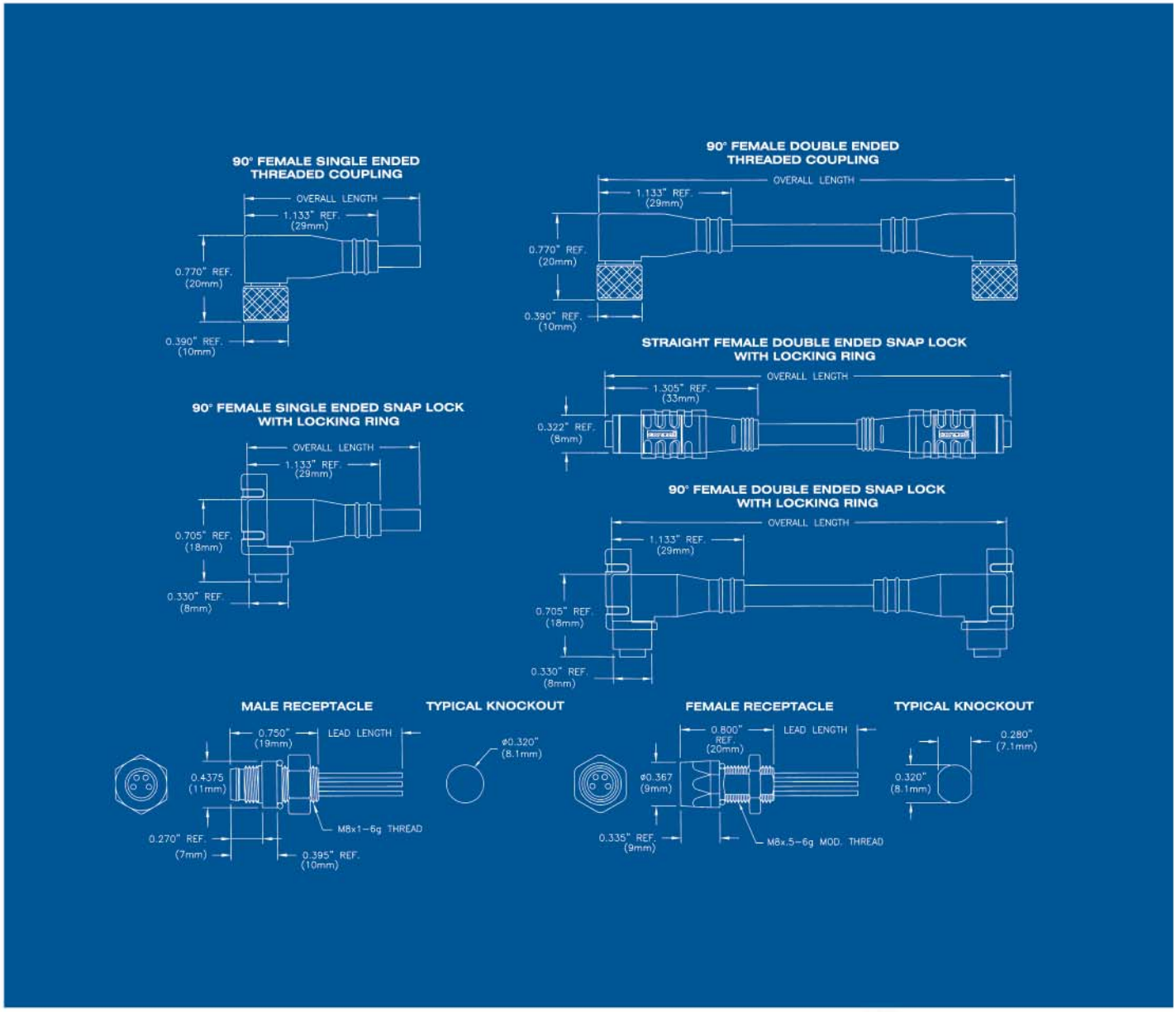

Snap Lock w/Ring	Snap Lock w/Ring	Snap Lock w/Ring	Snap Lock w/Ring	Snap Lock w/Ring
Snap Lock	Snap Lock	Snap Lock	Snap Lock	Snap Lock
Threaded	Threaded	Threaded	Threaded	Threaded
Straight Female/Female Double Ended	Straight Female/Male Double Ended	90° Female/Female Double Ended	Straight to 90° Female/Female Double Ended`	Straight to 90° Male/Female Double Ended
673S3S*2*	673S3P*2*	663S3S*2*	683S3S*2*	683P3S*2*
673S3S*5*	673S3P*5*	663S3S*5*	683S3S*5*	683P3S*5*
673S3S*6*	673S3P*6*	663S3S*6*	683S3S*6*	683P3S*6*
673S3S*XX*	673S3P*XX*	663S3S*XX*	683S3S*XX*	683P3S*XX*
674S4S*2*	674S4P*2*	664S4S*2*	684S4S*2*	684P4S*2*
674S4S*5*	674S4P*5*	664S4S*5*	684S4S*5*	684P4S*5*
674S4S*6*	674S4P*6*	664S4S*6*	684S4S*6*	684P4S*6*
674S4S*XX*	674S4P*XX*	664S4S*XX*	684S4S*XX*	684P4S*XX*

Coupling Code Example:
604SS2L = Snap Lock with Locking Ring
604SS2 = Snap Lock without Locking Ring
604ST2 = Threaded

Note: XX - Indicates "overall length / lead length" in meters

Ordering Code Example:
683P3S * XX *

Optional
L = Locking Ring

Length in Meters

S = Snap Lock
T = Threaded

* Please visit the product pages on our website for the most up-to-date product information

SENSOR-LINK NANO-MIZER® EMI/RFI SHIELDED

MOLDED CONNECTOR ASSEMBLIES

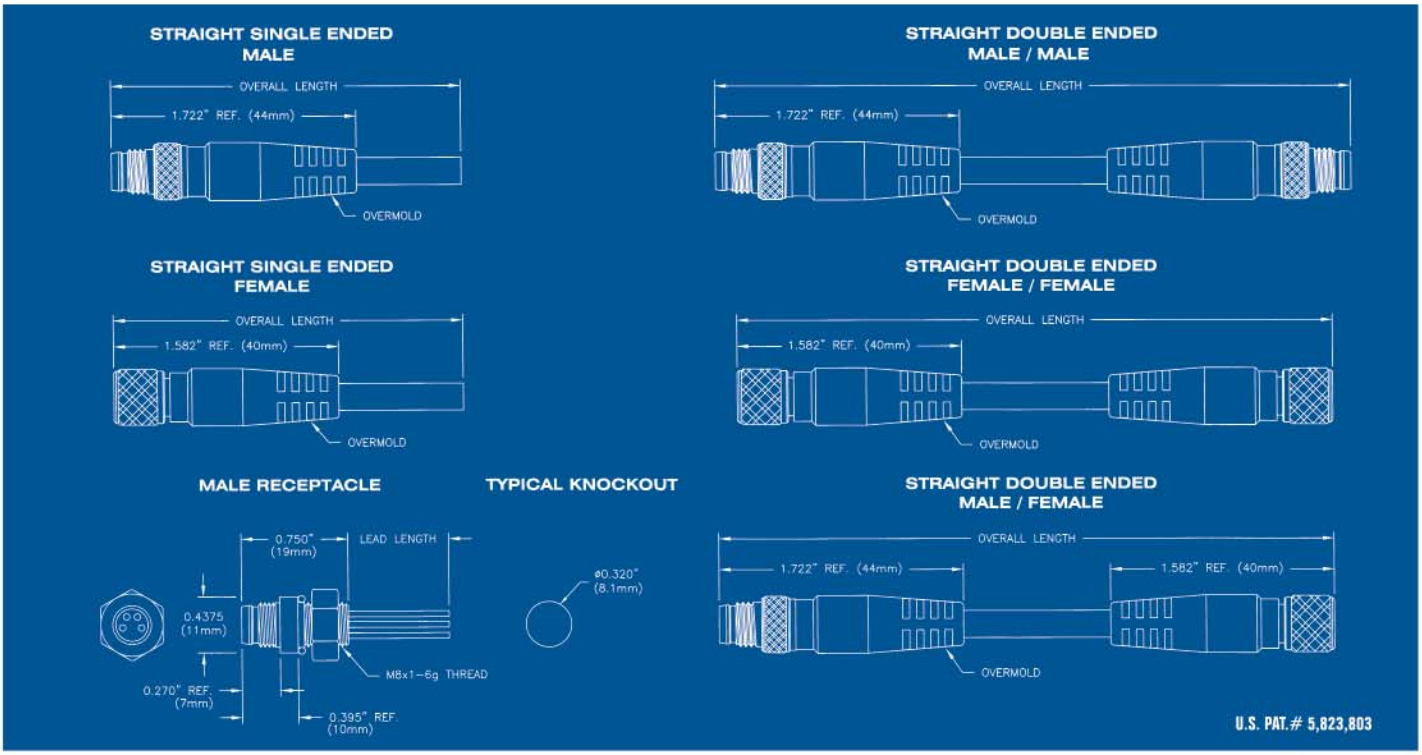

Face View Male	Rating	Overall Length Meters	Straight Inline Male Single Ended	Straight Female Single Ended	Straight Inline Male Double Ended	Straight Female/Female Double Ended	Straight Female/Male Double Ended	Receptacle Male .3 Meter Leads
		2	SH603PT2	SH603ST2	SH673P3PT2	SH673S3ST2	SH673S3PT2	
④ ① ③	4A	5	SH603PT5	SH603ST5	SH673P3PT5	SH673S3ST5	SH673S3PT5	SH613P.3
	125V	6	SH603PT6	SH603ST6	SH673P3PT6	SH673S3ST6	SH673S3PT6	
		Custom	SH603PTXX	SH603STXX	SH673P3PTXX	SH673S3STXX	SH673S3PTXX	SH613PXX
		2	SH604PT2	SH604ST2	SH674P4PT2	SH674S4ST2	SH674S4PT2	
② ④ ① ③	4A	5	SH604PT5	SH604ST5	SH674P4PT5	SH674S4ST5	SH674S4PT5	SH614P.3
	125V	6	SH604PT6	SH604ST6	SH674P4PT6	SH674S4ST6	SH674S4PT6	
		Custom	SH604PTXX	SH603STXX	SH674P4PTXX	SH674S4STXX	SH674S4PTXX	SH614PXX

For mechanical, electrical and wiring sequence see page 33.

* Please visit the product pages on our website for the most up-to-date product information

SENSOR-LINK NANO-MIZER®

MOLDED CONNECTOR ASSEMBLIES

SENSOR LINK PRODUCT LINE NANO-MIZER® SPECIFICATIONS

ELECTRICAL RATING

VOLTAGE: 300V, 4 Amps (Non-Shielded);
125V, 4 Amps (Shielded)

CABLE ASSEMBLIES

COUPLING NUT: Nickel Plated Brass

CONTACTS: Copper Alloy, Gold-Plated

INSERT: G.F. Nylon

MOLDED HEADS: PVC

O-RINGS: Viton

CABLE: .25mm^2 (or approximately 24 AWG) PVC Insulated,Fine Stranded Copper Conductors, Yellow Oil Resistant PVC Jacketed 300V, ST, 105°C. UL Recognized, CSA Certified

PANEL MOUNT ASSEMBLIES

SHELLS: Nickel plated brass

CONTACTS: Copper Alloy Gold-Plated

INSERTS: G.F. Nylon

WIRE: 24 AWG PVC Insulated, 300V UL Recognized, CSA Certified

ENVIRONMENTAL

PROTECTION: NEMA 6P, IP67 & IP68

OPERATING AMBIENT: -20° to 105°C

CERTIFICATIONS

UL: UL Recognized, File No. E-150822

CSA: CSA Certified File No.181200

STANDARD NANO-MIZER WIRING SEQUENCE

Panel Mounts and Cable Assemblies Conductor Color Code per Contact Position:

3 CONTACTS

1.	BRN
3.	BLU
4.	BLK

4 CONTACTS

1.	BRN
2.	WHT
3.	BLU
4.	BLK

* Please visit the product pages on our website for the most up-to-date product information

SENSOR-LINK
DIE BLOCK CONNECTORS

MOLDED CONNECTOR ASSEMBLIES

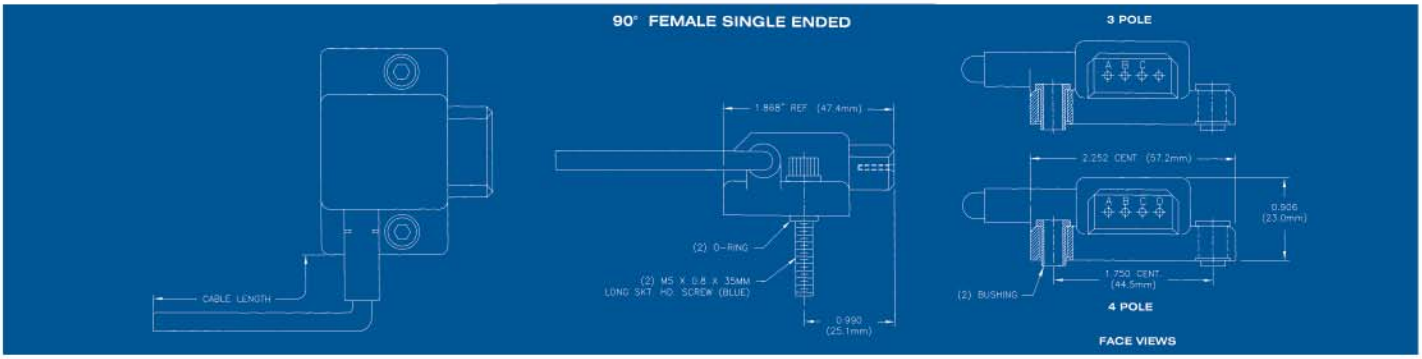

Rating	Cable Length Feet	3-Pole Yellow 90° Female Die Block	3-Pole Blue 90° Female Die Block	4-Pole Yellow 90° Female Die Block	4-Pole Blue 90° Female Die Block
7.5A	6	DBR3S3-6	DBR3S2-6	DBR4S3-6	DBR4S2-6
	10	DBR3S3-10	DBR3S2-10	DBR4S3-10	DBR4S2-10
300VAC	12	DBR3S3-12	DBR3S2-12	DBR4S3-12	DBR4S2-12
24VDC	20	DBR3S3-20	DBR3S2-20	DBR4S3-20	DBR4S2-20
	Custom	DBR3S3-XX	DBR3S2-XX	DBR4S3-XX	DBR4S2-XX

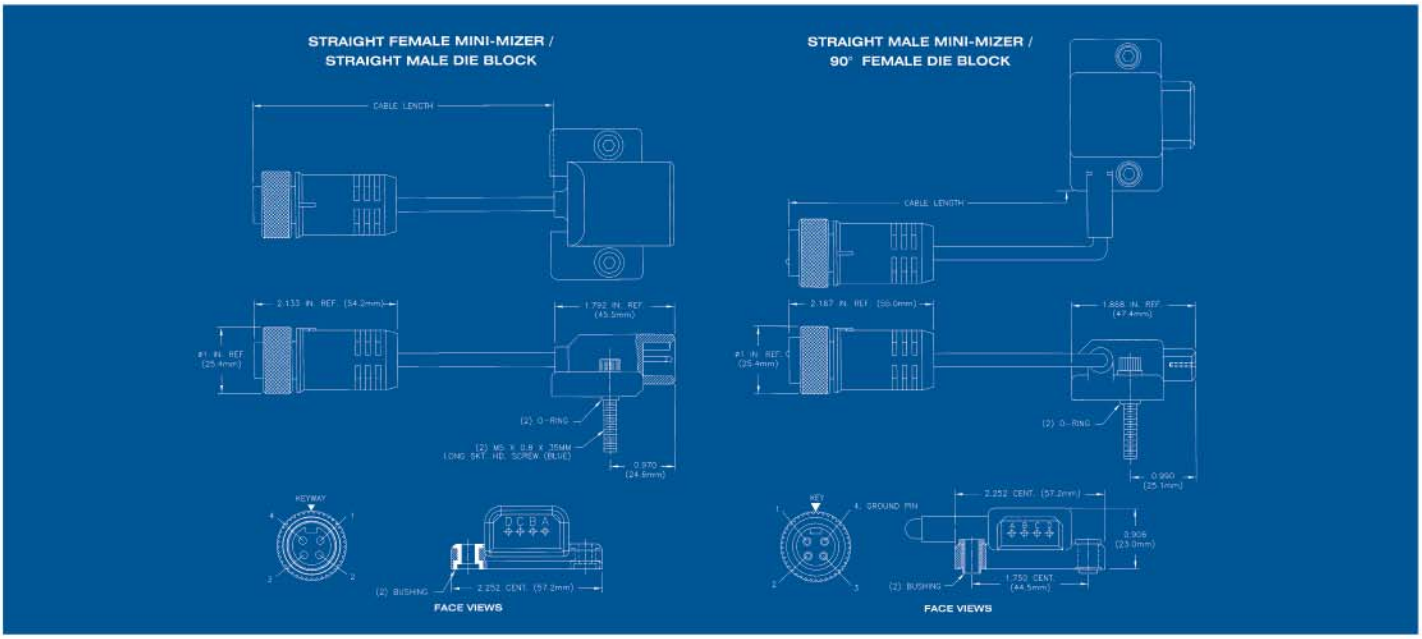

# Of Poles	Rating	Cable Length Feet	Yellow Straight Female Mini-Mizer to Straight Male Die Block	Blue Straight Female Mini-Mizer to Straight Male Die Block	Yellow Straight Male Mini-Mizer to 90° Female Die Block	Blue Straight Male Mini-Mizer to 90° Female Die Block
	7.5A	1	DB20S4SS4P3-1	DB20S4SS4P2-1	DB20S4PR4S3-1	DB20S4PR4S2-1
		2	DB20S4SS4P3-2	DB20S4SS4P2-2	DB20S4PR4S3-2	DB20S4PR4S2-2
	300VAC	3	DB20S4SS4P3-3	DB20S4SS4P2-3	DB20S4PR4S3-3	DB20S4PR4S2-3
4	24VDC	4	DB20S4SS4P3-4	DB20S4SS4P2-4	DB20S4PR4S3-4	DB20S4PR4S2-4
		6	DB20S4SS4P3-6	DB20S4SS4P2-6	DB20S4PR4S3-6	DB20S4PR4S2-6
		12	DB20S4SS4P3-12	DB20S4SS4P2-12	DB20S4PR4S3-12	DB20S4PR4S2-12
		Custom	DB20S4SS4P3-XX	DB20S4SS4P2-XX	DB20S4PR4S3-XX	DB20S4PR4S2-XX

XX - Indicates "Overall Length" in feet.
For mechanical, electrical and wiring sequence see page 37.

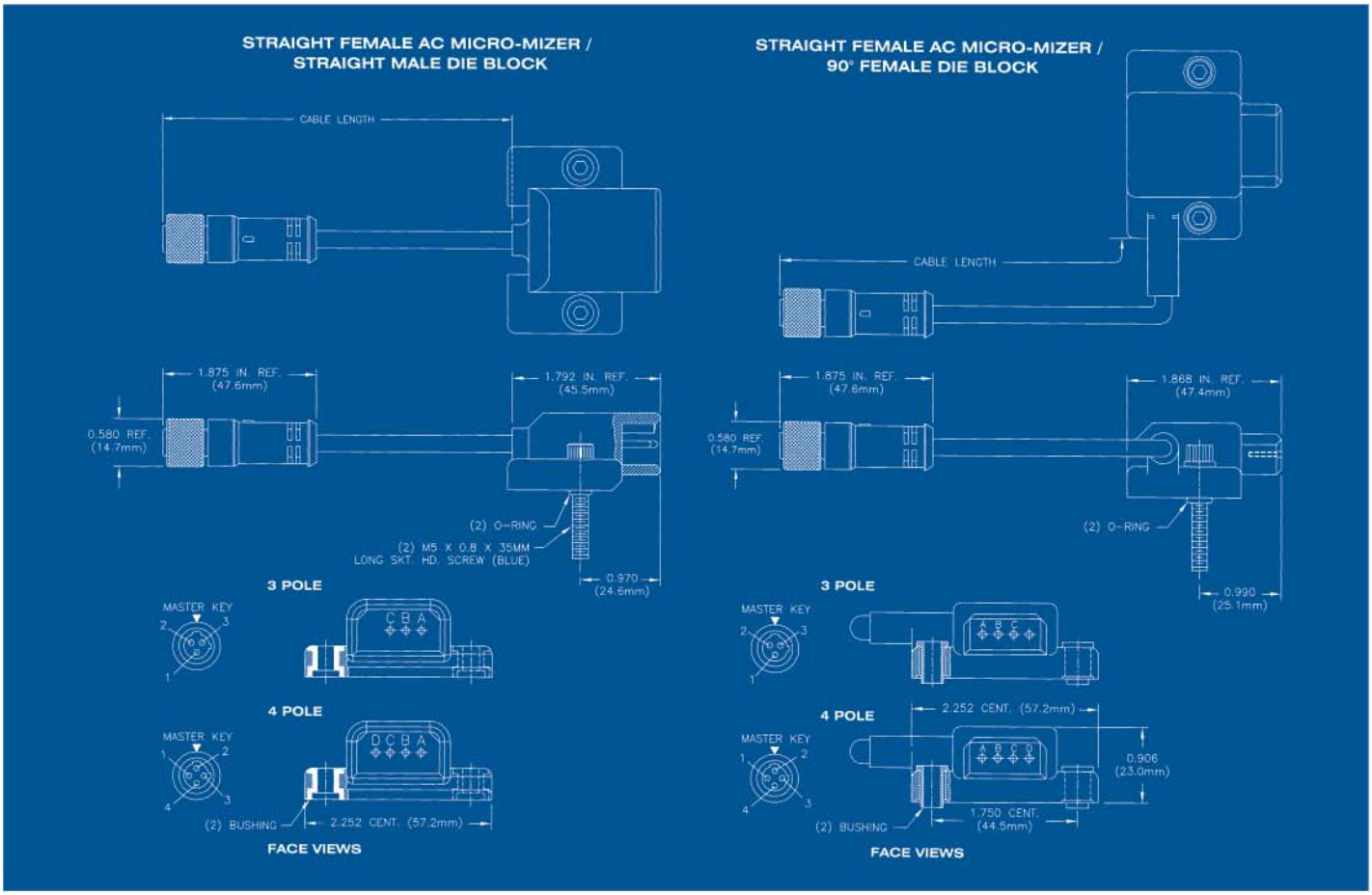

# Of Poles	Rating	Cable Length Feet	Yellow Straight Female AC Micro-Mizer to Straight Male Die Block	Red Straight Female AC Micro-Mizer to Straight Male Die Block	Yellow Straight Female AC Micro-Mizer to 90° Female Die Block	Red Straight Female AC Micro-Mizer to 90° Female Die Block
		1	DB40S3SS3P3-1	DB40S3SS3P1-1	DB40S3SR3S3-1	DB40S3SR3S1-1
	3A	2	DB40S3SS3P3-2	DB40S3SS3P1-2	DB40S3SR3S3-2	DB40S3SR3S1-2
		3	DB40S3SS3P3-3	DB40S3SS3P1-3	DB40S3SR3S3-3	DB40S3SR3S1-3
3	300VAC	4	DB40S3SS3P3-4	DB40S3SS3P1-4	DB40S3SR3S3-4	DB40S3SR3S1-4
	24VDC	6	DB40S3SS3P3-6	DB40S3SS3P1-6	DB40S3SR3S3-6	DB40S3SR3S1-6
		12	DB40S3SS3P3-12	DB40S3SS3P1-12	DB40S3SR3S3-12	DB40S3SR3S1-12
		Custom	DB40S3SS3P3-XX	DB40S3SS3P1-XX	DB40S3SR3S3-XX	DB40S3SR3S1-XX
		1	DB40S4SS4P3-1	DB40S4SS4P1-1	DB40S4SR4S3-1	DB40S4SR4S1-1
	3A	2	DB40S4SS4P3-2	DB40S4SS4P1-2	DB40S4SR4S3-2	DB40S4SR4S1-2
		3	DB40S4SS4P3-3	DB40S4SS4P1-3	DB40S4SR4S3-3	DB40S4SR4S1-3
4	300VAC	4	DB40S4SS4P3-4	DB40S4SS4P1-4	DB40S4SR4S3-4	DB40S4SR4S1-4
	24VDC	6	DB40S4SS4P3-6	DB40S4SS4P1-6	DB40S4SR4S3-6	DB40S4SR4S1-6
		12	DB40S4SS4P3-12	DB40S4SS4P1-12	DB40S4SR4S3-12	DB40S4SR4S1-12
		Custom	DB40S4SS4P3-XX	DB40S4SS4P1-XX	DB40S4SR4S3-XX	DB40S4SR4S1-XX

XX - Indicates "Overall Length" in feet.
For mechanical, electrical and wiring sequence see page 37.

SENSOR-LINK
DIE BLOCK CONNECTORS

MOLDED CONNECTOR ASSEMBLIES

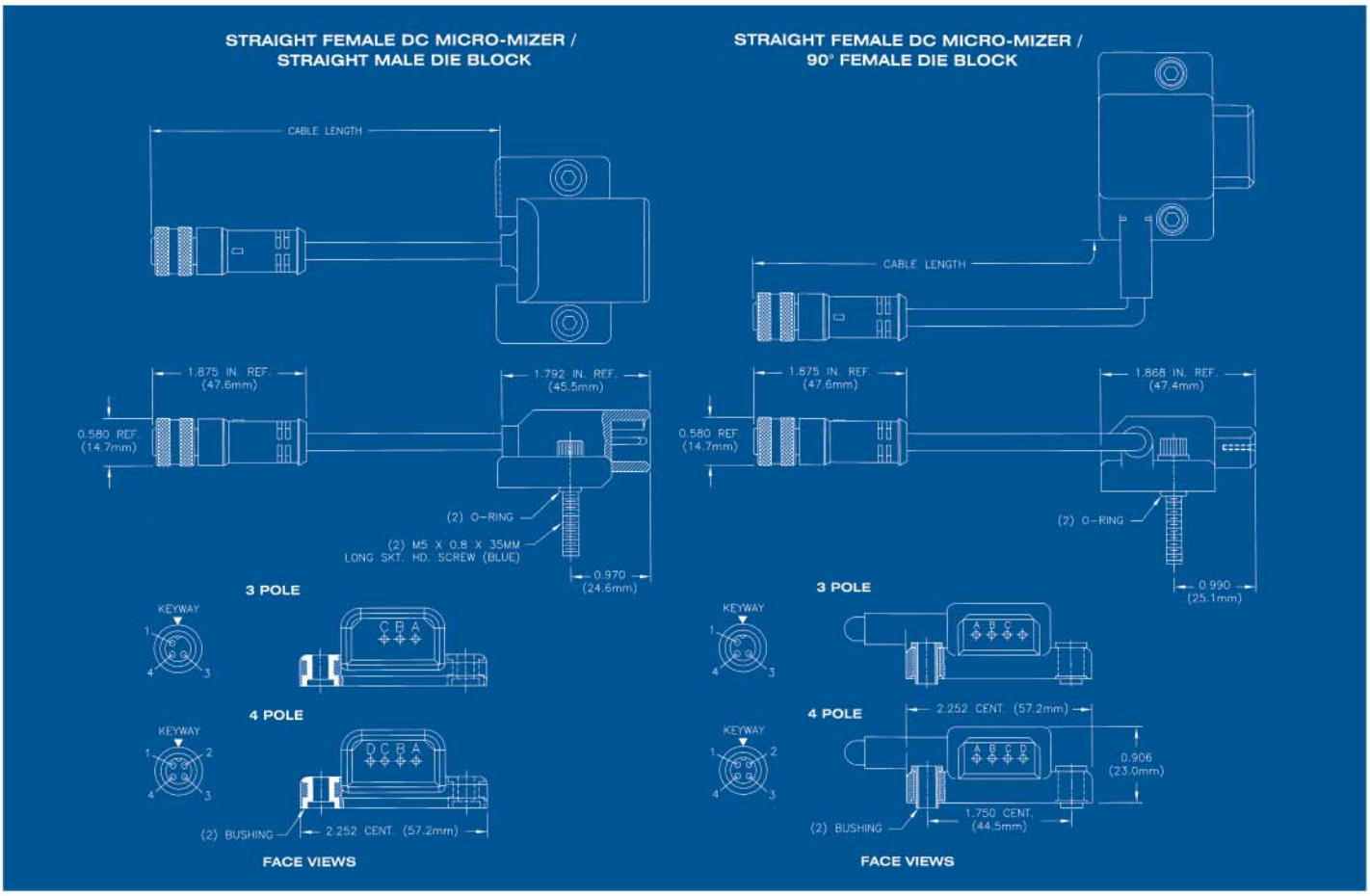

# Of Poles	Rating	Cable Length Feet	Yellow Straight Female DC Micro-Mizer to Straight Male Die Block	Blue Straight Female DC Micro-Mizer to Straight Male Die Block	Yellow Straight Female DC Micro-Mizer to 90° Female Die Block	Blue Straight Female DC Micro-Mizer to 90° Female Die Block
		1	DB30S3SS3P3-1	DB30S3SS3P2-1	DB30S3SR3S3-1	DB30S3SR3S2-1
	3A	2	DB30S3SS3P3-2	DB30S3SS3P2-2	DB30S3SR3S3-2	DB30S3SR3S2-2
		3	DB30S3SS3P3-3	DB30S3SS3P2-3	DB30S3SR3S3-3	DB30S3SR3S2-3
3	300VAC	4	DB30S3SS3P3-4	DB30S3SS3P2-4	DB30S3SR3S3-4	DB30S3SR3S2-4
	24VDC	6	DB30S3SS3P3-6	DB30S3SS3P2-6	DB30S3SR3S3-6	DB30S3SR3S2-6
		12	DB30S3SS3P3-12	DB30S3SS3P2-12	DB30S3SR3S3-12	DB30S3SR3S2-12
		Custom	DB30S3SS3P3-XX	DB30S3SS3P2-XX	DB30S3SR3S3-XX	DB30S3SR3S2-XX
		1	DB30S4SS4P3-1	DB30S4SS4P2-1	DB30S4SR4S3-1	DB30S4SR4S2-1
	3A	2	DB30S4SS4P3-2	DB30S4SS4P2-2	DB30S4SR4S3-2	DB30S4SR4S2-2
		3	DB30S4SS4P3-3	DB30S4SS4P2-3	DB30S4SR4S3-3	DB30S4SR4S2-3
4	300VAC	4	DB30S4SS4P3-4	DB30S4SS4P2-4	DB30S4SR4S3-4	DB30S4SR4S2-4
	24VDC	6	DB30S4SS4P3-6	DB30S4SS4P2-6	DB30S4SR4S3-6	DB30S4SR4S2-6
		12	DB30S4SS4P3-12	DB30S4SS4P2-12	DB30S4SR4S3-12	DB30S4SR4S2-12
		Custom	DB30S4SS4P3-XX	DB30S4SS4P2-XX	DB30S4SR4S3-XX	DB30S4SR4S2-XX

XX - Indicates "Overall Length" in feet.
For mechanical, electrical and wiring sequence see page 37.

* Please visit the product pages on our website for the most up-to-date product information

SENSOR-LINK
DIE BLOCK CONNECTORS

MOLDED CONNECTOR ASSEMBLIES

SENSOR LINK PRODUCT LINE
DIE BLOCK CONNECTORS SPECIFICATIONS

ELECTRICAL RATING

VOLTAGE: 300 VAC
24 VDC

MATERIALS

COUPLING NUT: Anodized Aluminum
CONTACTS: Copper Alloy, Gold-Plated
MOLDED HEADS: Polyurethane
O-RINGS: Viton
CABLE: 18 AWG, PVC Yellow Jacket Cable
BUSHINGS: Stainless Steel

STANDARD DIE BLOCK CONNECTOR WIRING SEQUENCE

Assembly Conductor Color Code per Contact Position:
(Below diagrams reflect Face View Female view)

Single Ended Die Block

3 Pole:

A	BRN
B	BLU
C	BLK

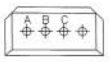

4 Pole:

A	RED/BLK
B	RED/WHT
C	RED
D	GRN

4-Pole Mini-Mizer to Die Block

1	RED/BLK	A	RED/BLK
2	RED/WHT	B	RED/WHT
3	RED	C	RED
4	GRN	D	GRN

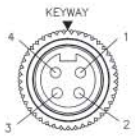

STANDARD DIE BLOCK CONNECTOR WIRING SEQUENCE (continued)

AC Micro-Mizer to Die Block

3 Pole:

1	GRN	A	GRN
2	RED/WHT	B	RED/WHT
3	RED/BLK	C	RED/BLK

("D" Position of a 3-pole female die block is molded open to accept a 4-pole mate.)

4 Pole:

1	RED/BLK	A	RED/BLK
2	RED/WHT	B	RED/WHT
3	RED	C	RED
4	GRN	D	GRN

DC Micro-Mizer to Die Block

3 Pole:

1	BRN	A	BRN
2	BLU	B	BLU
3	BLK	C	BLK

("D" Position of a 3-pole female die block is molded open to accept a 4-pole mate.)

4 Pole:

1	BRN	A	BLK
2	WHT	B	BLU
3	BLU	C	WHT
4	BLK	D	BRN

* Please visit the product pages on our website for the most up-to-date product information

SENSOR-LINK
MULTI-PORT "A" Size MINI-MIZER®

JUNCTION BOXES

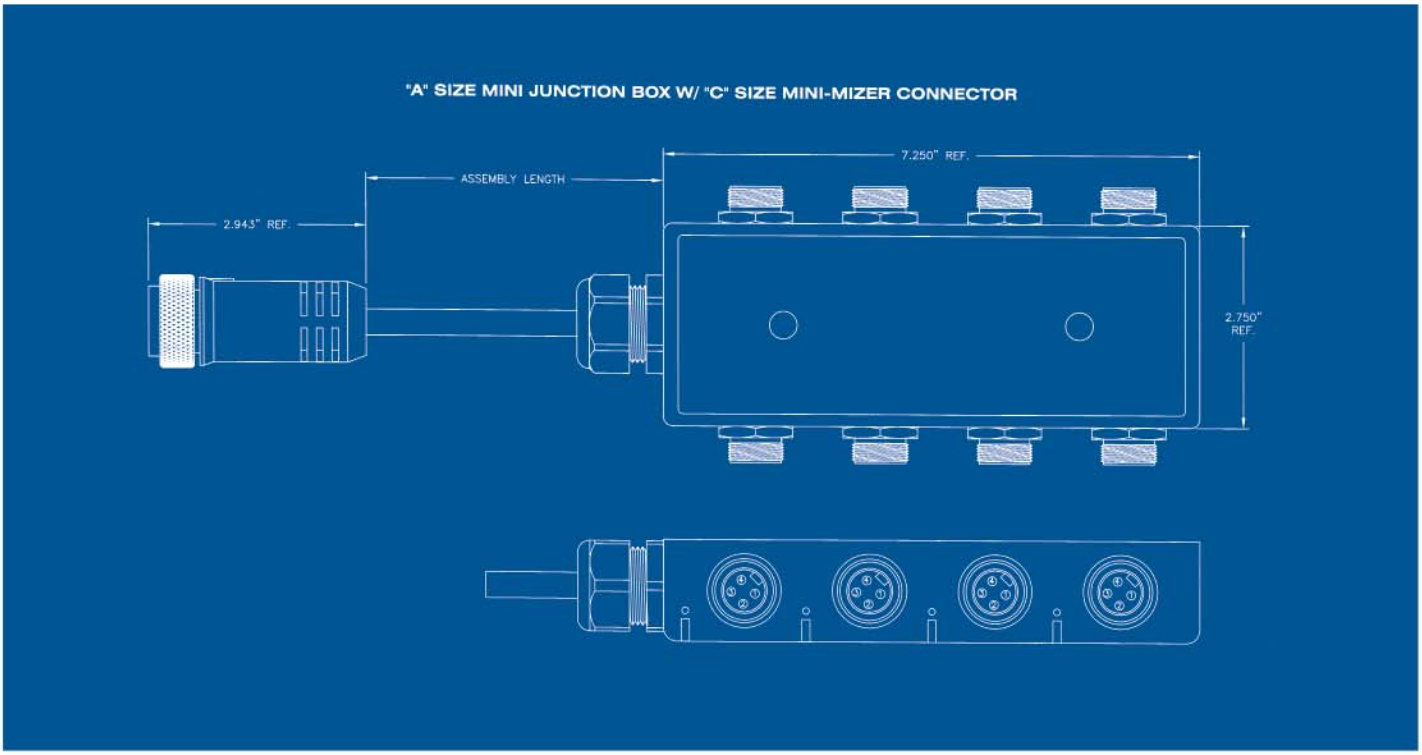

Junction Box P/N Sequence

JM 08 5S N M15 A 1

Number of Ports:

Number of Contacts per Port:

Port Thread Type
External
INternal

Type of Input
Box Mounted Connector
Number of Pin Contacts (2 thru 12)
OR
Box Mounted Cable
IXX - Cable Length in Inches

Wiring
11 – Series No Power LED & No Port LEDs
12 – Parallel No Power LED & No Port LEDs
13 – Series w/Power LED & No Port LEDs
14 – Parallel w/Power LED & No Port LEDs
15 – Series w/Power LED & Port LEDs
16 – Parallel w/Power LED & Port LEDs

Cable Mounted Connector Type
Blank – No Connector Provided
A – Mini A-Size (Same as # of Contacts in Ports)
B – Mini C-Size (12 for Standard, 19 for Twin)

* Please visit the product pages on our website for the most up-to-date product information

SENSOR-LINK
MULTI-PORT "A" Size MINI-MIZER®

JUNCTION BOXES

SENSOR LINK PRODUCT LINE

MULTI-PORT "A" Size MINI-MIZER® JUNCTION BOXES

FEATURES

- 2, 3, 4, 5, 6 pole "A" Size Mini-Mizer I/O ports.
- Available in 4, 6, & 8 ports.
- Internally or externally threaded ports.
- Home Run Connector or Home Run Cable.
- Home Run Connector available in "A" & "C" Size Mini-Mizer.
- 36, 72, or 144 inch standard cable lengths.
- Customer specified lengths available upon request.
- Wiring can be parallel or series.
- Assemblies are epoxy sealed.
- Available with or without LEDs
- Uses standard cables, "Y" connectors and splitters available from Conxall.
- Port environmental covers are available.

SPECIFICATIONS

- Junction Box is rated at 7 amps at 600 volts.
- Temperature rating: -20° C - +80° C.
- UL Recognized, File number E150822.
- Meets IP68 requirements.

MATERIALS

- Enclosure - PBT plastic
- Receptacle Shells - Anodized aluminum
- Consult factory for stainless steel or nickel plated brass receptacle shells.
- Contacts - Gold over nickel plated copper alloy
- Cable - 16 AWG, PVC Yellow Jacketed
- Connector Inserts - Santoprene

Consult factory for wiring diagrams.
Consult factory for customization.

* Please visit the product pages on our website for the most up-to-date product information

SENSOR-LINK
MULTI-PORT DC MICRO-MIZER®

JUNCTION BOXES

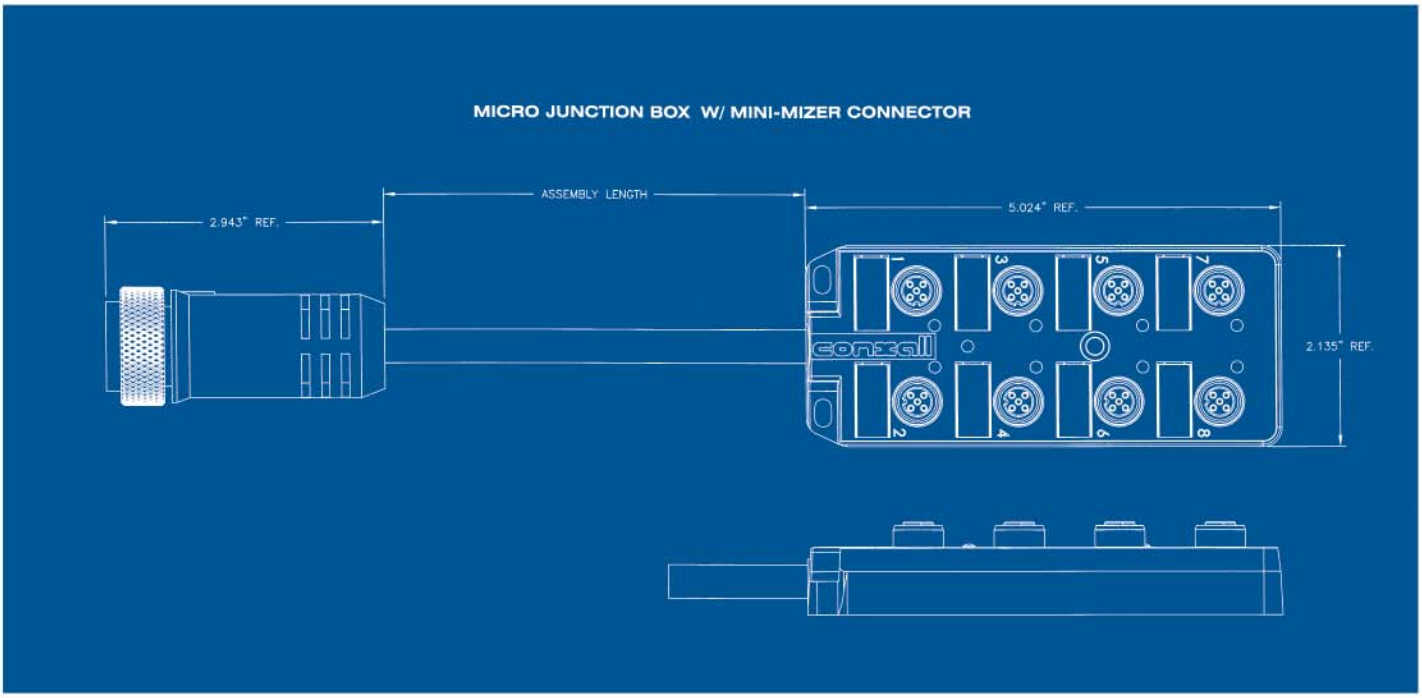

PNP CIRCUIT (current sinking) / NORMALLY OPEN OR NORMALLY CLOSED
(1 green LED per box - power indicator / 1 yellow LED per port - I/O indicator)

# OF PORTS	N/O - N/C	CABLE LENGTH	CONNECTOR	I/O PIN #	PART NUMBER
8	OPEN	1	NONE	4	JD085SNM15
8	OPEN	5	NONE	4	JD085SNM55
8	OPEN	10	NONE	4	JD085SNM105
8	OPEN	1	12 POLE MALE MINI	4	JD085SNM1B5
8	OPEN	5	12 POLE MALE MINI	4	JD085SNM5B5
8	OPEN	10	12 POLE MALE MINI	4	JD085SNM10B5
8	CLOSED	1	NONE	2	JD085SNM16
8	CLOSED	5	NONE	2	JD085SNM56
8	CLOSED	10	NONE	2	JD085SNM106
8	CLOSED	1	12 POLE MALE MINI	2	JD085SNM1B6
8	CLOSED	5	12 POLE MALE MINI	2	JD085SNM5B6
8	CLOSED	10	12 POLE MALE MINI	2	JD085SNM10B6

NPN CIRCUIT (current sourcing) / NORMALLY OPEN OR NORMALLY CLOSED
(1 green LED per box - power indicator / 1 yellow LED per port - I/O indicator)

# OF PORTS	N/O - N/C	CABLE LENGTH	CONNECTOR	I/O PIN #	PART NUMBER
8	OPEN	1	NONE	4	JD085SNM13
8	OPEN	5	NONE	4	JD085SNM53
8	OPEN	10	NONE	4	JD085SNM103
8	OPEN	1	12 POLE MALE MINI	4	JD085SNM1B3
8	OPEN	5	12 POLE MALE MINI	4	JD085SNM5B3
8	OPEN	10	12 POLE MALE MINI	4	JD085SNM10B3
8	CLOSED	1	NONE	2	JD085SNM14
8	CLOSED	5	NONE	2	JD085SNM54
8	CLOSED	10	NONE	2	JD085SNM104
8	CLOSED	1	12 POLE MALE MINI	2	JD085SNM1B4
8	CLOSED	5	12 POLE MALE MINI	2	JD085SNM5B4
8	CLOSED	10	12 POLE MALE MINI	2	JD085SNM10B4

TWIN WIRED PNP CIRCUIT (current sinking)
(1 green LED per box - power indicator / 2 yellow LED per port - I/O indicator)

# OF PORTS	CABLE LENGTH	CONNECTOR	I/O PIN #	PART NUMBER
8	1	NONE	2 & 4	JD085SNM18
8	5	NONE	2 & 4	JD085SNM58
8	10	NONE	2 & 4	JD085SNM108
8	1	19 POLE MALE MINI	2 & 4	JD085SNM1B8
8	5	19 POLE MALE MINI	2 & 4	JD085SNM5B8
8	10	19 POLE MALE MINI	2 & 4	JD085SNM10B8

TWIN WIRED NPN CIRCUIT (current sourcing)
(1 green LED per box - power indicator / 2 yellow LED per port - I/O indicator)

# OF PORTS	CABLE LENGTH	CONNECTOR	I/O PIN #	PART NUMBER
8	1	NONE	2 & 4	JD085SNM17
8	5	NONE	2 & 4	JD085SNM57
8	10	NONE	2 & 4	JD085SNM107
8	1	19 POLE MALE MINI	2 & 4	JD085SNM1B7
8	5	19 POLE MALE MINI	2 & 4	JD085SNM5B7
8	10	19 POLE MALE MINI	2 & 4	JD085SNM10B7

POWER LED ONLY - NORMALLY OPEN OR NORMALLY CLOSED
(1 green LED per box - power indicator / no port I/O LED indicator)

# OF PORTS	N/O - N/C	CABLE LENGTH	CONNECTOR	I/O PIN #	PART NUMBER
8	OPEN	1	NONE	4	JD085SNM19
8	OPEN	5	NONE	4	JD085SNM59
8	OPEN	10	NONE	4	JD085SNM109
8	OPEN	1	12 POLE MALE MINI	4	JD085SNM1B9
8	OPEN	5	12 POLE MALE MINI	4	JD085SNM5B9
8	OPEN	10	12 POLE MALE MINI	4	JD085SNM10B9
8	CLOSED	1	NONE	2	JD085SNM110
8	CLOSED	5	NONE	2	JD085SNM510
8	CLOSED	10	NONE	2	JD085SNM1010
8	CLOSED	1	12 POLE MALE MINI	2	JD085SNM1B10
8	CLOSED	5	12 POLE MALE MINI	2	JD085SNM5B10
8	CLOSED	10	12 POLE MALE MINI	2	JD085SNM10B10

NO LED - NORMALLY OPEN OR NORMALLY CLOSED
(no box LED power indicator / no port I/O LED indicator)

# OF PORTS	N/O - N/C	CABLE LENGTH	CONNECTOR	I/O PIN #	PART NUMBER
8	OPEN	1	NONE	4	JD085SNM11
8	OPEN	5	NONE	4	JD085SNM51
8	OPEN	10	NONE	4	JD085SNM101
8	OPEN	1	12 POLE MALE MINI	4	JD085SNM1B1
8	OPEN	5	12 POLE MALE MINI	4	JD085SNM5B1
8	OPEN	10	12 POLE MALE MINI	4	JD085SNM10B1
8	CLOSED	1	NONE	2	JD085SNM12
8	CLOSED	5	NONE	2	JD085SNM52
8	CLOSED	10	NONE	2	JD085SNM102
8	CLOSED	1	12 POLE MALE MINI	2	JD085SNM1B2
8	CLOSED	5	12 POLE MALE MINI	2	JD085SNM5B2
8	CLOSED	10	12 POLE MALE MINI	2	JD085SNM10B2

* Please visit the product pages on our website for the most up-to-date product information

SENSOR-LINK
MULTI-PORT DC MICRO-MIZER®

JUNCTION BOXES

SENSOR LINK PRODUCT LINE

MULTI-PORT DC MICRO-MIZER® JUNCTION BOXES

FEATURES

- 5 pole 12 mm DC Micro I/O ports.
- Blunt cut cable, 12 pole male connector or 19 pole male connector options.
- 1, 5, or 10 meter standard cable lengths.
- Customer specified lengths available upon request.
- PNP (current sinking) or NPN (current sourcing) options.
- Normally Open (pin #4) or Normally Closed (pin #2) wiring options.
- Port designation tabs included.
- Environmental port covers included.
- Assemblies are epoxy sealed.
- Available with 2 I/O LEDs per port, 1 I/O LED per port, power LED only, or no LEDs.
- Custom assemblies built to customer specifications upon request.
- Uses standard cables, Y connectors, and splitters available from Conxall.

SPECIFICATIONS

- Individual ports are rated at 4 amps at 30 volts.
- Junction box is rated at 12 amps at 30 volts.
- Temperature rating: -20° C - +80° C.
- UL Recognized, File number E150822.
- Meets IP68 requirements.

MATERIALS

- Enclosure - Modified PPO plastic
- Receptacle Shells - Nickel plated brass
- Consult factory for stainless steel receptacle shells.
- Contacts - Gold over nickel plated copper alloy
- Cable - 8 - #22 & 3 - #18 with PVC insulation and PUR jacket.
- Connector inserts - Nylon
- Port environmental covers - Nylon
- Port designation tabs - Styrene

Consult factory for wiring diagrams.
Consult factory for 4 or 6 port options.
Consult factory for 4, 6, or 8 Port AC version Junction Boxes.

NEW PRODUCTS

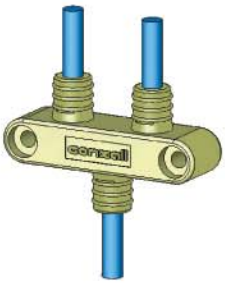

MICRO-MIZER® / NANO-MIZER® "T" & "Y" SPLITTERS

- Polyurethane Overmold
- Nickel plated brass coupling rings
- 4,5, or 8 positions available
- Available in series or parallel wiring
- With or without mounting tabs
- Various "T" configurations available
  - Micro-Mizer® male -to- Micro-Mizer® female with Micro-Mizer® female drop
  - Micro-Mizer® male -to- Micro-Mizer® female with Nano-Mizer® female drop
- Various "Y" configurations available
  - (1) Nano-Mizer® male -to- (2) Nano-Mizer® females
  - (1) Micro-Mizer® male -to- (2) Micro-Mizer® females

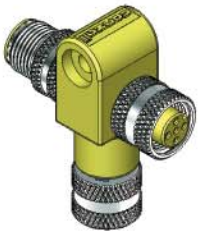

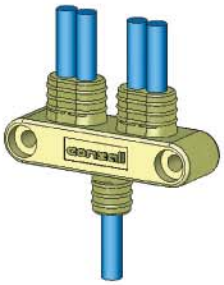

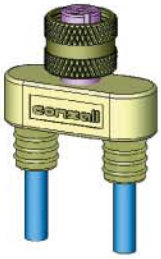

Компания «ЭлектроПласт» предлагает заключение долгосрочных отношений при поставках импортных электронных компонентов на взаимовыгодных условиях!

Наши преимущества:

- Оперативные поставки широкого спектра электронных компонентов отечественного и импортного производства напрямую от производителей и с крупнейших мировых складов;
- Поставка более 17-ти миллионов наименований электронных компонентов;
- Поставка сложных, дефицитных, либо снятых с производства позиций;
- Оперативные сроки поставки под заказ (от 5 рабочих дней);
- Экспресс доставка в любую точку России;
- Техническая поддержка проекта, помощь в подборе аналогов, поставка прототипов;
- Система менеджмента качества сертифицирована по Международному стандарту ISO 9001;
- Лицензия ФСБ на осуществление работ с использованием сведений, составляющих государственную тайну;
- Поставка специализированных компонентов (Xilinx, Altera, Analog Devices, Intersil, Interpoint, Microsemi, Aeroflex, Peregrine, Syfer, Eurofarad, Texas Instrument, Miteq, Cobham, E2V, MA-COM, Hittite, Mini-Circuits,General Dynamics и др.);

Помимо этого, одним из направлений компании «ЭлектроПласт» является направление «Источники питания». Мы предлагаем Вам помощь Конструкторского отдела:

- Подбор оптимального решения, техническое обоснование при выборе компонента;
- Подбор аналогов;
- Консультации по применению компонента;
- Поставка образцов и прототипов;
- Техническая поддержка проекта;
- Защита от снятия компонента с производства.

Как с нами связаться

Телефон: 8 (812) 309 58 32 (многоканальный)
Факс: 8 (812) 320-02-42
Электронная почта: org@eplast1.ru
Адрес: 198099, г. Санкт-Петербург, ул. Калинина, дом 2, корпус 4, литера А.