IMC-P111FX / IMC-P111P M12 Series

Industrial IEC 61850-3 Ethernet to fiber media converter with 1x10/100Base-T(X) M12 connector to 1x100Base-FX fiber or 1x100Base-FX SFP socket

Features

- Designed for Railway application and fully compliant with the requirement of IEC 61850-3 and IEEE 1613
- Leading EN50155-compliant Ethernet switch for rolling stock application
- Supports 1 port 10/100Base-T(X) auto-negotiation and auto-MDI/MDI-X
- Support Ethernet to fiber or Ethernet to SFP port
- Support **LFP (Link Fault Pass-through)** function
- Supports full/half duplex operation
- Supports store and forward transmission
- Supports relay output for power failed alarm
- Provided DIP-Switch to setting function
- Ultra-rugged enclosure M12 connector for toughest industrial usages
- High reliability and rigid IP-30 housing
- DIN-Rail and wall mounting enabled

Introduction

IMC-P111 M12 series is a cost-effective solution for the conversion between 10/100Base-T(X) M12 connector and 100Base-FX interface; it allows you to extend communication distance by optical fiber. IMC-P111 M12 series are designed for power substation application and rolling stock application, fully compliant with the requirement of IEC 61850-3 and IEEE 1613. IMC-P111 M12 series supports MDI/MDIX auto detection, so you don't need to use crossover wires. IMC-P111 M12 series Ethernet switch use M12 connectors to ensure tight, robust connections, and guarantee reliable operation against environmental disturbances, such as vibration and shock. IMC-P111 M12 series with wide operating temperature range from -40 ~ 85°C and accepts a wide voltage range power inputs, so it is suitable for harsh operating environments.

IMC-P111 M12 series also support the **LFP (Link Fault Pass-through)** feature. When one side of the link fails, the other side continues transmitting packets, and waiting for a response that never arrives from the disconnected side. Use the DIP-Switch to enable the LFP function, then IMC-P111 M12 series will force the link to shutdown as soon as noticed that the other link has failed, giving the application software a chance to react to the situation. Therefore, the IMC-P111

M12 series is reliable media converter and can satisfy most demand of power substation and rolling stock application.

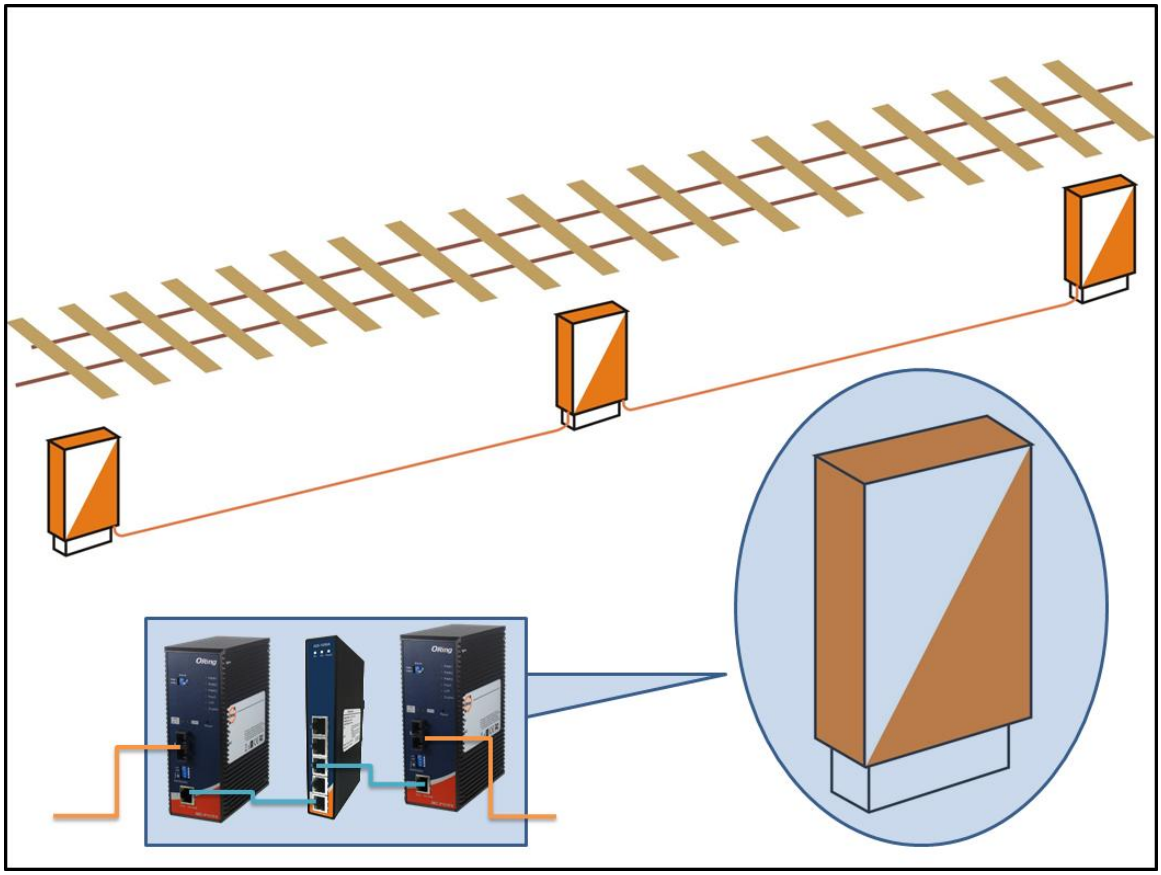

Dimension

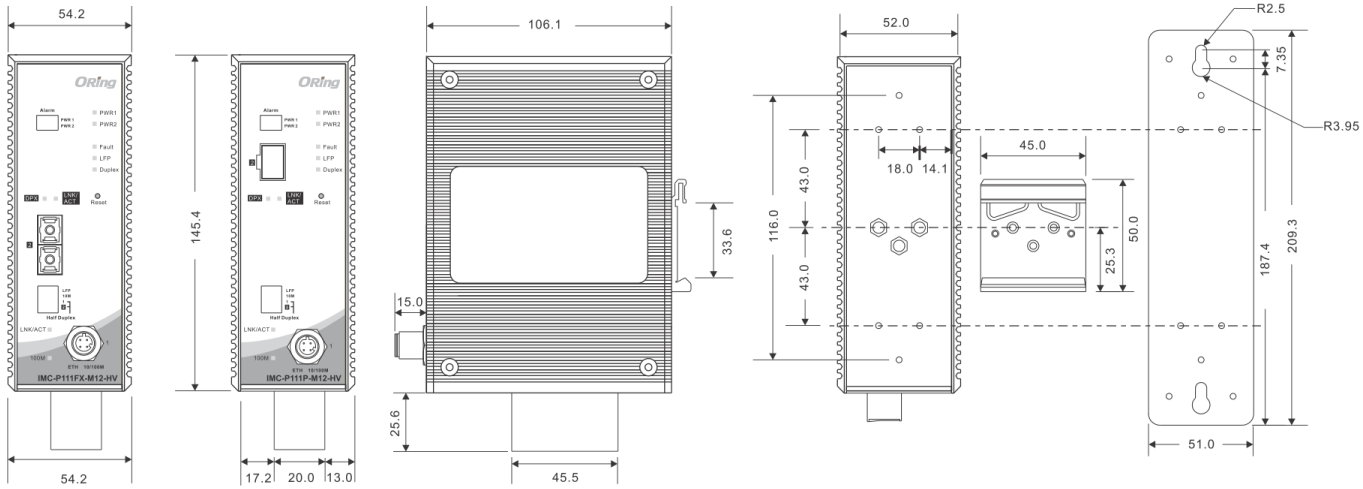

IMC-P111-M12-HV Series

Unit=mm

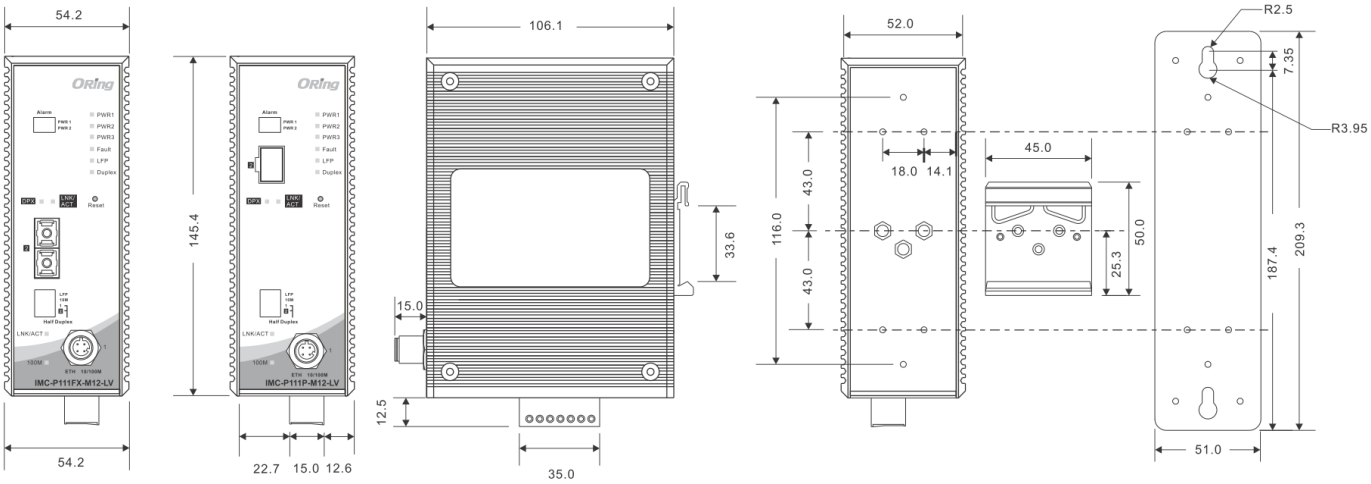

IMC-P111-M12-LV Series

Unit=mm

Specifications

ORing Media Converter Model		IMC-P111FX-MM-SC-M12	IMC-P111FX-SS-SC-M12	IMC-P111P-M12
Physical Ports				
10/100 Base-T(X) Port in RJ45 Auto MDI/MDIX		**1 (M12 A-coded)**	**1 (M12 A-coded)**	**1 (M12 A-coded)**
Fiber Port Specification	Fiber Ports Number	**1**	**1**	**-**
	Fiber Ports Standard	100Base-FX	100Base-FX	-
	Fiber Mode	Multi-mode	Single-mode	-
	Fiber Diameter (μm)	62.5/125 μm 50/125 μm	9/125 μm	**-**
	Fiber Optical Connector	SC	SC	**-**
	Typical Distance (Km)	2 Km	30 Km	**-**
	Wavelength (nm)	1310 nm	1310 nm	**-**
	Max. Output Optical Power (dbm)	-14 dbm	-8 dbm	**-**
	Min. Output Optical Power (dbm)	-23.5 dbm	-15 dbm	**-**
	Max. Input Optical Power (Saturation)	0 dbm	0 dbm	**-**
	Min. Input Optical Power (Sensitivity)	-31 dbm	-34 dbm	**-**
	Link Budget (db)	7.5 db	19 db	**-**
100Base-FX SFP port		**-**	**-**	**1**
Technology				
Ethernet Standards		IEEE 802.3 for 10Base-T IEEE 802.3u for 100Base-T(X) and 100Base-FX IEEE 802.3x for Flow control		
Processing		Store-and-Forward		
DIP-Switch setting		DIP-Switch 1 for LFP mode selection : (ON) enable / (OFF) disable DIP-Switch 2 for Ethernet speed selection : (ON)10Mbps / (OFF) 10/100Mbps Auto-negotiate DIP-Switch 3 for Ethernet full/half duplex selection : (ON) Half-duplex / (OFF) Full/Half-Duplex Auto-negotiate DIP-Switch 4 for fiber full/half duplex selection : (ON) Half-Duplex / (OFF) Full-Duplex		
Alarm DIP-Switch				
DIP-Switch 1		Power-1 failed warning : (ON) enable, (OFF) disable		
DIP-Switch 2		Power-2 failed warning : (ON) enable, (OFF) disable		
LED indicators				
Power indicator		LV Model : Green : Power LED x 3 (ON : power input on-line / (OFF) power input off-line HV Model : Green : Power LED x 2 (ON : power input on-line / (OFF) power input off-line		

10/100Base-T(X) RJ45 port indicator	Green for port Link/Act – (ON) Link up / (Blinking) Acting / (OFF) Link down Amber for port duplex indicator – (ON) Full-Duplex / (OFF) Half-Duplex		
100Base-FX fiber port indicator	Green for fiber port Link/Act - (ON) Link up / (Flash) Acting / (OFF) Link down Amber for fiber port duplex indicator – (ON) Full-Duplex / (OFF) Half-Duplex		
LFP statue indicator	Amber LED – (ON) LFP function fail / (OFF) LFP function disable		
Fault indicator	Amber : Indicate unexpected event occurred		
Duplex indicator	Green for port duplex indicator – (ON) Full-Duplex / (OFF) Half-Duplex		
Power			
LV Model Input Power	Triple DC inputs. Dual 12~48VDC on 7-pin terminal block, one 12~45VDC on power jack		
HV Model Input Power	Dual 100~240VAC power inputs on 8-pin terminal block		
Power consumption (Typ.)	LV model : 12 Watts, HV model : 100VAC/4.8Watts, 240VAC/5.8Watts)	LV model : 12 Watts HV model : 100VAC/4.8Watts, 240VAC/5.8Watts)	LV model : 12 Watts HV model : 100VAC/4.8Watts, 240VAC/5.8Watts)
Overload current protection	Present		
Reverse polarity protection	Present on terminal block		
Physical Characteristic			
Enclosure	IP-30		
Dimension (W x D x H)	54.2(W) x 106.1(D) x 145.4(H) mm (2.05x4.18x5.68 inch.)		
Weight (g)	LV model : 691 g HV model : 833 g		LV model : 681 g HV model : 823 g
Environmental			
Storage Temperature	-40 to 85°C (-40 to 185°F)		
Operating Temperature	-40 to 85°C (-40 to 185°F)		
Operating Humidity	5% to 95% Non-condensing		
Regulatory approvals			
Power Automation	IEC 61850-3, IEEE 1613		
EMI	FCC Part 15, CISPR (EN55022) class A, EN50155 (EN50121-3-2, EN55011, EN50121-4)		
EMS	EN61000-4-2 (ESD), EN61000-4-3 (RS), EN61000-4-4 (EFT), EN61000-4-5 (Surge), EN61000-4-6 (CS), EN61000-4-8, EN61000-4-11		
Shock	IEC60068-2-27		
Free Fall	IEC60068-2-32		
Vibration	IEC60068-2-6		
Safety	EN60950-1		
Warranty	5 years		

Ordering Information

IMC-P1ABCC-DD-EE-M12-FF

Code Definition	10/100Base-T(X) Port Number	100Base-FX Fiber Port Number	Fiber Port Type	Fiber Optical Mode	Fiber Optical Connector	Voltage Type
Option	**- 1:** 1 ports	**- 1:** 1 port	**- FX:** 100Base-FX fiber **- P:** 100Base-FX SFP	**- MM:** Multi-mode **- SS:** Single-mode	**- SC:** SC connector	**- LV:** Low-Voltage power inputs **- HV:** High-Voltage power inputs

	Model Name	Description
Available Model	**IMC-P111FX-MM-SC-M12-LV**	Industrial IEC 61850-3 Ethernet to fiber media converter with 1x10/100Base-T(X) M12 connector and 1x100Base-FX, multi-mode, 2Km/1310nm, SC connector, low-voltage power inputs
	IMC-P111FX-SS-SC-M12-LV	Industrial IEC 61850-3 Ethernet to fiber media converter with 1x10/100Base-T(X) M12 connector and 1x100Base-FX, single-mode, 30Km/1310nm, SC connector, low-voltage power inputs
	IMC-P111FX-MM-SC-M12-HV_US	Industrial IEC 61850-3 Ethernet to fiber media converter with 1x10/100Base-T(X) M12 connector and 1x100Base-FX, multi-mode, 2Km/1310nm, SC connector, high-voltage power inputs, US power cord
	IMC-P111FX-SS-SC-M12-HV_US	Industrial IEC 61850-3 Ethernet to fiber media converter with 1x10/100Base-T(X) M12 connector and 1x100Base-FX, single-mode, 30Km/1310nm, SC connector, high-voltage power inputs, US power cord
	IMC-P111FX-MM-SC-M12-HV_UK	Industrial IEC 61850-3 Ethernet to fiber media converter with 1x10/100Base-T(X) M12 connector and 1x100Base-FX, multi-mode, 2Km/1310nm, SC connector, high-voltage power inputs, UK power cord
	IMC-P111FX-SS-SC-M12-HV_UK	Industrial IEC 61850-3 Ethernet to fiber media converter with 1x10/100Base-T(X) M12 connector and 1x100Base-FX, single-mode, 30Km/1310nm, SC connector, high-voltage power inputs, UK power cord
	IMC-P111FX-MM-SC-M12-HV_EU	Industrial IEC 61850-3 Ethernet to fiber media converter with 1x10/100Base-T(X) M12 connector and 1x100Base-FX, multi-mode, 2Km/1310nm, SC connector, high-voltage power inputs, EU power cord
	IMC-P111FX-SS-SC-M12-HV_EU	Industrial IEC 61850-3 Ethernet to fiber media converter with 1x10/100Base-T(X) M12 connector and 1x100Base-FX, single-mode, 30Km/1310nm, SC connector, high-voltage power inputs, EU power cord
	IMC-P111FX-MM-SC-M12-HV_JP	Industrial IEC 61850-3 Ethernet to fiber media converter with 1x10/100Base-T(X) M12 connector and 1x100Base-FX, multi-mode, 2Km/1310nm, SC connector, high-voltage power inputs, JP power cord
	IMC-P111FX-SS-SC-M12-HV_JP	Industrial IEC 61850-3 Ethernet to fiber media converter with 1x10/100Base-T(X) M12 connector and 1x100Base-FX, single-mode, 30Km/1310nm, SC connector, high-voltage power inputs, JP power cord
	IMC-P111P-M12-LV	Industrial IEC 61850-3 Ethernet to fiber media converter with 1x10/100Base-T(X) M12 connector and 1x100Base-FX, SFP socket, low-voltage power inputs
	IMC-P111P-M12-HV_US	Industrial IEC 61850-3 Ethernet to fiber media converter with 1x10/100Base-T(X) M12 connector and 1x100Base-FX, SFP socket, high-voltage power inputs, US power cord
	IMC-P111P-M12-HV_UK	Industrial IEC 61850-3 Ethernet to fiber media converter with 1x10/100Base-T(X) M12 connector and 1x100Base-FX, SFP socket, high-voltage power inputs, UK power cord
	IMC-P111P-M12-HV_EU	Industrial IEC 61850-3 Ethernet to fiber media converter with 1x10/100Base-T(X) M12 connector and 1x100Base-FX, SFP socket, high-voltage power inputs, EU power cord
	IMC-P111P-M12-HV_JP	Industrial IEC 61850-3 Ethernet to fiber media converter with 1x10/100Base-T(X) M12 connector and 1x100Base-FX, SFP socket, high-voltage power inputs, JP power cord

Packing List

- **IMC-P111-M12 x 1**
- **Quick Installation Guide x 1**
- **Din-Rail Kit x 1**
- **Wall-Mount Kit x 1**

Optional Accessories

- **SFP100 series : 100Mbps SFP optical transceiver**
- **DR-75 series : 75 Watts power supply**
- **DR-45 series : 45 Watts power supply**
- **DR-120 series : 120 Watts power supply**

Компания «ЭлектроПласт» предлагает заключение долгосрочных отношений при поставках импортных электронных компонентов на взаимовыгодных условиях!

Наши преимущества:

- Оперативные поставки широкого спектра электронных компонентов отечественного и импортного производства напрямую от производителей и с крупнейших мировых складов;
- Поставка более 17-ти миллионов наименований электронных компонентов;
- Поставка сложных, дефицитных, либо снятых с производства позиций;
- Оперативные сроки поставки под заказ (от 5 рабочих дней);
- Экспресс доставка в любую точку России;
- Техническая поддержка проекта, помощь в подборе аналогов, поставка прототипов;
- Система менеджмента качества сертифицирована по Международному стандарту ISO 9001;
- Лицензия ФСБ на осуществление работ с использованием сведений, составляющих государственную тайну;
- Поставка специализированных компонентов (Xilinx, Altera, Analog Devices, Intersil, Interpoint, Microsemi, Aeroflex, Peregrine, Syfer, Eurofarad, Texas Instrument, Miteq, Cobham, E2V, MA-COM, Hittite, Mini-Circuits,General Dynamics и др.);

Помимо этого, одним из направлений компании «ЭлектроПласт» является направление «Источники питания». Мы предлагаем Вам помощь Конструкторского отдела:

- Подбор оптимального решения, техническое обоснование при выборе компонента;
- Подбор аналогов;
- Консультации по применению компонента;
- Поставка образцов и прототипов;
- Техническая поддержка проекта;
- Защита от снятия компонента с производства.

Как с нами связаться

Телефон: 8 (812) 309 58 32 (многоканальный)
Факс: 8 (812) 320-02-42
Электронная почта: org@eplast1.ru
Адрес: 198099, г. Санкт-Петербург, ул. Калинина, дом 2, корпус 4, литера А.