Features

- RoHS compatible for all six substances
- Worldwide AC Input Capabilities: 100/120/220/230/240 VAC
- ±0.05% Output Regulation
- Low Output Ripple
- UL, CSA, and TÜV Approvals
- Mean Time Before Failure (MTBF) in Excess of 300,000 Hours
- CE marked to Low Voltage Directive
- 100% Burn-In
- 2 Year Warranty
- Overvoltage Protection (OVP) Standard on 5V Single Outputs, Optional for other outputs under 48V

Description

Power-One produces the industry's broadest selection of Linear power supplies with output voltages from 5 volts through 250 volts. Rugged technology and proven design merge to create quiet, highly-regulated, dependable DC power.

The Linear power supplies are approved to domestic and international regulatory standards, and are CE Marked to the Low Voltage Directive (LVD).

Overvoltage Protection Options

OVERVOLTAGE PROTECTION OPTIONS

These optional overvoltage protection modules are offered for use with Power-One's Linear power supplies. Each is user adjustable from 6.4V to 34V.

OVP-12G

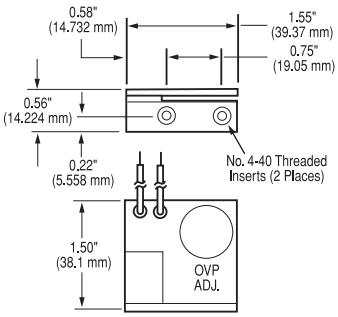

OVP SELECTION GUIDE

MODEL	CASE SIZE	OVP MODULES REQUIRED
SINGLE OUTPUT	B,C,N,D	(1) OVP-12G
	E,F	(1) OVP-24G
DUAL OUTPUT	AA,B,BB,CC	(1) OVP-12G protects both outputs
	E	(1) OVP-24G protects both outputs
TRIPLE OUTPUT	AA,BAA,D CBB, 131 DBB,DCC	(1) OVP-12G protects both 12V through 15V outputs
PEAK CURRENT MODELS	N,BAA,CBB 131	(1) OVP-12G protects any output not provided with built-in OVP

NOTE: Outputs with factory built-in OVP are indicated in the Voltage/Current Rating Chart for each model. OVP is not available for 48V through 250V models.

OVP-24G

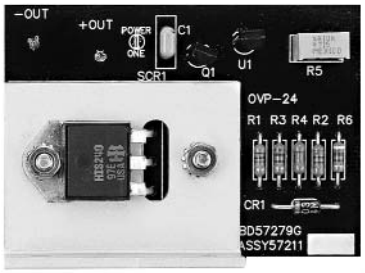

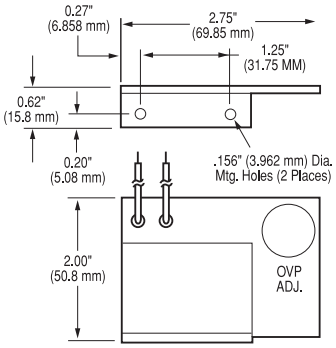

Unsigned output voltages are isolated and can be used as either + or - polarities.

Nominal Vout*	Max Amps	Model Input 100 to 264 VAC	Case Type	Additional Features & Notes
5Vout				
5	1.5	HA5-1.5/OVP-AG	B	A
5	3	HB5-3/OVP-AG	B	A, C
5	6	HC5-6/OVP-AG	C	A, C
5	9	HN5-9/OVP-AG	N	A, C
5	12	HD5-12/OVP-AG	D	A, C
5	18	HE5-18/OVP-AG	E	A, C
5	25	F5-25/OVP-AG	F	A, C, D, H
5	35	G5-35/OVP-AG	F	A, C, D, H
5	50	CP197-AG	F	A, C, D
12 to 15Vout				
12	0.9	HA15-0.9-AG	B	
12	1.7	HB12-1.7-AG	B	C
12	3.4	HC12-3.4-AG	C	C
12	5.1	HN12-5.1-AG	N	C
12	6.8	HD12-6.8-AG	D	C
12	10.2	HE12-10.2-AG	E	C
12	16	F15-15-AG	F	C, D, H
15*	0.9	HA15-0.9-AG	B	
15	1.5	HB15-1.5-AG	B	C
15	3	HC15-3-AG	C	C
15	4.5	HN15-4.5-AG	N	C
15	6	HD15-6-AG	D	C
15	9	HE15-9-AG	E	C
15*	15	F15-15-AG	F	C, D, H
24 to 28Vout				
24	0.5	HA24-0.5-AG	B	
24	1.2	HB24-1.2-AG	B	C
24	2.4	HC24-2.4-AG	C	C
24	3.6	HN24-3.6-AG	N	C
24	4.8	HD24-4.8-AG	D	C
24	7.2	HE24-7.2-AG	E	C
24	12	F24-12-AG	F	C, D, H
28*	0.5	HA24-0.5-AG	B	
28	1	HB28-1-AG	B	C
28	2	HC28-2-AG	C	C
28	3	HN28-3-AG	N	C
28	4	HD28-4-AG	D	C
28	6	HE28-6-AG	E	C
28*	10	F24-12-AG	F	C, D, H
48Vout				
48	0.5	HB48-0.5-AG	B	
48	1	HC48-1-AG	C	
48	3	HD48-3-AG	D	C
48	4	HE48-4-AG	E	C

Case Type	Dimensions (Inches)
AA	6.50 x 4.00 x 2.10
B	4.87 x 4.00 x 2.10
BAA	10.25 x 4.00 x 2.95
BB	7.00 x 4.87 x 2.95
C	5.62 x 4.87 x 2.95
CBB	11.00 x 4.87 x 3.28
CC	9.38 x 4.87 x 3.28
CP131	11.00 x 4.87 x 3.28
D	9.00 x 4.87 x 3.28
DBB	14.25 x 4.87 x 3.38
DCC	15.00 x 4.88 x 4.55
E	14.00 x 4.87 x 3.53
F	16.75 x 4.88 x 5.00
N	7.00 x 4.87 x 3.28

Case Type	Dimensions (Millimeters)
AA	165.10 x 101.60 x 53.34
B	123.70 x 101.60 x 53.34
BAA	260.35 x 101.60 x 74.93
BB	177.80 x 123.70 x 74.93
C	142.75 x 123.70 x 74.93
CBB	279.40 x 123.70 x 83.31
CC	238.25 x 123.70 x 83.31
CP131	279.40 x 123.70 x 83.31
D	228.60 x 123.70 x 83.31
DBB	361.95 x 123.70 x 85.85
DCC	381.00 x 123.95 x 115.57
E	355.60 x 123.70 x 89.66
F	425.50 x 123.95 x 127.00
N	177.80 x 123.70 x 83.31

(See Additional Features Column)

- A Overvoltage protection, set at 6.2 V ±0.4 V.
- B Non-adjustable 3-terminal regulator.
- C Remote sense provided.
- D With output inhibit and parallel operation master/slave capability.
- E With output inhibit.
- F Adjustable 3-terminal regulator.
- G Can be made into an isolated output by removing jumper W1.
- H Model requires 100 LFM forced-air cooling above 75% of rated output power at 50 degrees C.

* May require jumpering or potentiometer adjustment.

Model numbers highlighted in yellow or shaded are not recommended for new designs.

Unsigned output voltages are isolated and can be used as either + or - polarities.

Nominal Vout*	Max Amps	Model Input 100 to 264 VAC	Case Type	Additional Features & Notes
5V to 15Vout				
+5, –5	1.5, 1.5	HAA5-1.5/OVP-AG	AA	A
+5, –5	3, 3	HBB5-3/OVP-AG	BB	A
+5, –5	6, 6	HCC5-6/OVP-AG	CC	A, C
5, 12 to 15	2, 0.5	HAA512-AG	AA	A
5, 12 to 15	3, 1.25	HBB512-AG	BB	A, C
5, 12 to 15	6, 2.5	HCC512-AG	CC	A, C
+12, –5*	1, 0.4	HAA15-0.8-AG	AA	C
+12, –5*	1.7, 0.7	HBB15-1.5-AG	BB	C
+12, –12	0.4, 0.4	HAD12-0.4-AG	B	B
+12, –12	1, 1	HAA15-0.8-AG	AA	C
+12, –12	1.7, 1.7	HBB15-1.5-AG	BB	C
+12, –12	3.4, 3.4	HCC15-3-AG	CC	C
+12, –12*	5, 5	HDD15-5-AG	E	C
+12, –15*	1, 0.8	HAA15-0.8-AG	AA	C
+12, –15*	1.7, 1.5	HBB15-1.5-AG	BB	C
+12, –15*	3.4, 3	HCC15-3-AG	CC	C
+12, –15*	5, 5	HDD15-5-AG	E	C
+15, –5*	0.8, 0.4	HAA15-0.8-AG	AA	C
+15, –5*	1.5, 0.7	HBB15-1.5-AG	BB	C
+15, –12*	0.8, 1	HAA15-0.8-AG	AA	C
+15, –12*	1.5, 1.7	HBB15-1.5-AG	BB	C
+15, –12*	3, 3.4	HCC15-3-AG	CC	C
15, –12*	5, 5	HDD15-5-AG	E	C
15V to 24Vout				
+15, –15	0.4, 0.4	HAD15-0.4-AG	B	B
+15, –15	0.8, 0.8	HAA15-0.8-AG	AA	C
+15, –15*	1.5, 1.5	HBB15-1.5-AG	BB	C
+15, –15*	3, 3	HCC15-3-AG	CC	C
+15, –15	5, 5	HDD15-5-AG	E	C
+24, –24	0.6, 0.6	HAA24-0.6-AG	AA	
+24, –24	1.2, 1.2	HBB24-1.2-AG	BB	
+24, –24	2.4, 2.4	HCC24-2.4-AG	CC	C

* May require jumpering or potentiometer adjustment.

Case Type	Dimensions (Inches)
AA	6.50 x 4.00 x 2.10
B	4.87 x 4.00 x 2.10
BAA	10.25 x 4.00 x 2.95
BB	7.00 x 4.87 x 2.95
C	5.62 x 4.87 x 2.95
CBB	11.00 x 4.87 x 3.28
CC	9.38 x 4.87 x 3.28
CP131	11.00 x 4.87 x 3.28
D	9.00 x 4.87 x 3.28
DBB	14.25 x 4.87 x 3.38
DCC	15.00 x 4.88 x 4.55
E	14.00 x 4.87 x 3.53
F	16.75 x 4.88 x 5.00
N	7.00 x 4.87 x 3.28

Case Type	Dimensions (Millimeters)
AA	165.10 x 101.60 x 53.34
B	123.70 x 101.60 x 53.34
BAA	260.35 x 101.60 x 74.93
BB	177.80 x 123.70 x 74.93
C	142.75 x 123.70 x 74.93
CBB	279.40 x 123.70 x 83.31
CC	238.25 x 123.70 x 83.31
CP131	279.40 x 123.70 x 83.31
D	228.60 x 123.70 x 83.31
DBB	361.95 x 123.70 x 85.85
DCC	381.00 x 123.95 x 115.57
E	355.60 x 123.70 x 89.66
F	425.50 x 123.95 x 127.00
N	177.80 x 123.70 x 83.31

(See Additional Features Column)

- A Overvoltage protection, set at 6.2 V ±0.4 V.
- B Non-adjustable 3-terminal regulator.
- C Remote sense provided.
- D With output inhibit and parallel operation master/slave capability.
- E With output inhibit.
- F Adjustable 3-terminal regulator.
- G Can be made into an isolated output by removing jumper W1.
- H Model requires 100 LFM forced-air cooling above 75% of rated output power at 50 degrees C.

Unsigned output voltages are isolated and can be used as either + or - polarities.

Nominal Vout*	Max Amps	Model Input 100 to 264 VAC	Case Type	Additional Features & Notes
Triple Output Models, 5V to 24Vout				
+5, +12, –5*	2, 0.4, 0.4	HTAA-16W-AG	AA	A
5, +12, –5*	3, 1, 0.4	HBAA-40W-AG	BAA	A, C
+5, +12, –5*	6, 1, 0.4	HCAA-60W-AG	D	A, C
5, +12, –5*	6, 1.7, 0.7	HCBB-75W-AG	CBB	C
5, +12, –5*	8, 1.7, 0.7	CP131-AG	CP131	A, C
5, +12, –5*	12, 1.7, 0.7	HDBB-105W-AG	DBB	A, C
5, +12, –12	2, 0.4, 0.4	HTAA-16W-AG	AA	A
5, +12, –12	3, 1, 1	HBAA-40W-AG	BAA	A, C
+5, +12, –12	6, 1, 1	HCAA-60W-AG	D	A, C
5, +12, –12	6, 1.7, 1.7	HCBB-75W-AG	CBB	C
5, +12, –12	8, 1.7, 1.7	CP131-AG	CP131	A, C
5, +12, –12	12, 1.7, 1.7	HDBB-105W-AG	DBB	C
5, +12, –12	12, 3.4, 3.4	HDCC-150W-AG	DCC	A, C
5, +12, –15*	2, 0.4, 0.4	HTAA-16W-AG	AA	A
5, +12, –15*	3, 1, 0.8	HBAA-40W-AG	BAA	A, C
+5, +12, –15*	6, 1, 1	HCAA-60W-AG	D	A, C
5, +12, –15	6, 1.7, 1.5	HCBB-75W-AG	CBB	C
5, +12, –15	8, 1.7, 1.5	CP131-AG	CP131	A, C
5, +12, –15*	12, 1.7, 1.5	HDBB-105W-AG	DBB	C
5, +12, –15	12, 3.4, 3	HDCC-150W-AG	DCC	A, C
5, +15, –5*	2, 0.4, 0.4	HTAA-16W-AG	AA	A
5, +15, –5*	3, 0.8, 0.4	HBAA-40W-AG	BAA	A, C
+5, +15, –5*	6, 1, 0.4	HCAA-60W-AG	D	A, C
5, +15, –5*	6, 1.5, 0.7	HCBB-75W-AG	CBB	C
5, +15, –5*	8, 1.5, 0.7	CP131-AG	CP131	A,
5, +15, –5*	12, 1.5, 0.7	HDBB-105W-AG	DBB	C
5, +15, –12*	2, 0.4, 0.4	HTAA-16W-AG	AA	A
5, +15, –12*	3, 0.8, 1	HBAA-40W-AG	BAA	A, C
+5, +15, –12*	6, 1, 1	HCAA-60W-AG	D	A, C
5, +15, –12	6, 1.5, 1.7	HCBB-75W-AG	CBB	C
5, +15, –12	8, 1.5, 1.7	CP131-AG	CP131	A, C
5, +15, –12*	12, 1.5, 1.7	HDBB-105W-AG	DBB	C
5, +15, –12	12, 3, 3.4	HDCC-150W-AG	DCC	A, C
5, +15, –15*	2, 0.4, 0.4	HTAA-16W-AG	AA	A
5, +15, –15*	3, 0.8, 0.8	HBAA-40W-AG	BAA	A, C
+5, +15, –15*	6, 1, 1	HCAA-60W-AG	D	A, C
5, +15, –15	6, 1.5, 1.5	HCBB-75W-AG	CBB	C
5, +15, –15	8, 1.5, 1.5	CP131-AG	CP131	A, C
5, +15, –15*	12, 1.5, 1.5	HDBB-105W-AG	DBB	C
5, +15, –15	12, 3, 3	HDCC-150W-AG	DCC	A, C

* May require jumpering or potentiometer adjustment.

Case Type	Dimensions (Inches)
AA	6.50 x 4.00 x 2.10
B	4.87 x 4.00 x 2.10
BAA	10.25 x 4.00 x 2.95
BB	7.00 x 4.87 x 2.95
C	5.62 x 4.87 x 2.95
CBB	11.00 x 4.87 x 3.28
CC	9.38 x 4.87 x 3.28
CP131	11.00 x 4.87 x 3.28
D	9.00 x 4.87 x 3.28
DBB	14.25 x 4.87 x 3.38
DCC	15.00 x 4.88 x 4.55
E	14.00 x 4.87 x 3.53
F	16.75 x 4.88 x 5.00
N	7.00 x 4.87 x 3.28

Case Type	Dimensions (Millimeters)
AA	165.10 x 101.60 x 53.34
B	123.70 x 101.60 x 53.34
BAA	260.35 x 101.60 x 74.93
BB	177.80 x 123.70 x 74.93
C	142.75 x 123.70 x 74.93
CBB	279.40 x 123.70 x 83.31
CC	238.25 x 123.70 x 83.31
CP131	279.40 x 123.70 x 83.31
D	228.60 x 123.70 x 83.31
DBB	361.95 x 123.70 x 85.85
DCC	381.00 x 123.95 x 115.57
E	355.60 x 123.70 x 89.66
F	425.50 x 123.95 x 127.00
N	177.80 x 123.70 x 83.31

(See Additional Features Column)

- A Overvoltage protection, set at 6.2 V ±0.4 V.
- B Non-adjustable 3-terminal regulator.
- C Remote sense provided.
- D With output inhibit and parallel operation master/slave capability.
- E With output inhibit.
- F Adjustable 3-terminal regulator.
- G Can be made into an isolated output by removing jumper W1.
- H Model requires 100 LFM forced-air cooling above 75% of rated output power at 50 degrees C.

Input Specifications

PARAMETER	CONDITIONS/DESCRIPTION		MIN	NOM	MAX	UNITS
Input Voltage - AC (Note 1, 2)	Jumper selectable, shipped factory configured for 120VAC operation. All models must be externally fused for proper operation. Fuse ratings are marked on each unit. Consult factory for each unit's fuse requirements.	100 VAC Tap	87	100	110	VAC
		120 VAC Tap	104	120	132	
		220 VAC Tap	191	220	242	
		240 VAC Tap	209	240	264	
Input Frequency	AC input.		47		63	Hz
Line Regulation	Output voltage charge for a 10% line change: F case models.		-0.01		+0.01	%
	HAD12, HAD15.		-1.0		+1.0	
	Outputs with adjustable three terminal regulators.		-0.5		+0.5	
	All other models.		-0.05		+0.05	

NOTES: 1) Derate output current 10% for 50Hz operation.
2) Input voltage tolerance for 230VAC operation is +15%, -10%.

Output Specifications

PARAMETER	CONDITIONS/DESCRIPTION	MIN	NOM	MAX	UNITS
Output Adjustment	Minimum output adjustment range (Note 1).	-5		+5	%
Efficiency	5 volt outputs.		45		%
	12 volt and 15 volt outputs.		55		
	24 volt and higher outputs.		60		
Ripple and Noise (Note 2)	F case models.			3.0	mVPK-PK
	5 volt, 12 volt, and 15 volt models.			5.0	mVPK-PK
	All three terminal regulator outputs.			0.2	%PK-PK
	24 volt through 250 volt models.	3.0mVPK-PK plus 0.02% of output voltage, max			
Load Regulation	Output change for a 50% load change: F case models.	-0.02		+0.02	%
	HAD12, HAD15.	-1		+1	
	Outputs with adjustable three terminal regulators.	-0.5		+0.5	
	All other models.	-0.05		+0.05	
Transient Response	Recovery time, to within 1% of initial set point due to a 50% load change.			50	µs

NOTES: 1) **OUTPUT VOLTAGE ADJUSTMENTS:** Output voltage adjustments can be made to within ±5% of factory setting of nominal output voltage. Locate the "Vadj" potentiometer on the power supply PCB and use a screwdriver to adjust the output pot. The HAD12 and HAD15 3 terminal regulator outputs are not adjustable.
2) Full load, 20MHz bandwidth.

Safety, Regulatory, and EMI Specifications

PARAMETER	CONDITIONS/DESCRIPTION		MIN	NOM	MAX	UNITS
Agency Approvals	UL60950-1.			Approved		
	CSA 60950-1 "cUL".					
	EN60950-1.					
	IEC60950-1.					
Dielectric Withstand Voltage	Input to output.		3000			VAC
	Input to ground.		1500			
Electromagnetic Interference	FCC CFR title 47 Part 15 Sub-Part B - conducted.		Compatible with system compliance to Level B.			
	EN55022 / CISPR 22 conducted.					
	EN55022 / CISPR 22 radiated.					
Leakage Current	Per EN60950	(264VAC)		23	50	µA

Interface Signals and Internal Protection

PARAMETER	CONDITIONS/DESCRIPTION	MIN	NOM	MAX	UNITS
Overvoltage Protection	Provided on 5 volt output units where indicated. Other outputs may use optional overvoltage protectors OVP-12 and OVP-24.	5.8		6.6	V
Remote Sense	Total voltage compensation for cable losses with respect to the main output. Provided on models where indicated.			250	mV
Overcurrent/Short Circuit Protection	Automatic current limit/foldback. Rated as a percentage of output power.	115	120	140	%
Master/Slave Operation	For parallel operation of up to 6 units. Master/slave pin provided on F case models only. Contact factory for application notes.				

Environmental Specifications

PARAMETER	CONDITIONS/DESCRIPTION		MIN	NOM	MAX	UNITS
Operating Temperature	Derate output power linearly above 50°C by 3% per °C.	At 100% load	0		50	°C
		At 40% load			70	°C
Storage Temperature			-40		85	°C
Temperature Coefficient	0°C to 50°C (after 15 minute warm-up).			0.1	0.3	%/°C
	24 hours after warm-up.		-0.3		+0.3	%
Shock	Operating.				20	GPK
Vibration	Random vibration from 10 Hz to 2 kHz, 3 axis.				6.15	GRMS
Relative Humidity	Non-Condensing.		5		95	%RH

AA CASE

OVERALL SIZE
6.50" x 4.00" x 2.10"
(165.10 mm) x (101.60 mm) x (53.34 mm)

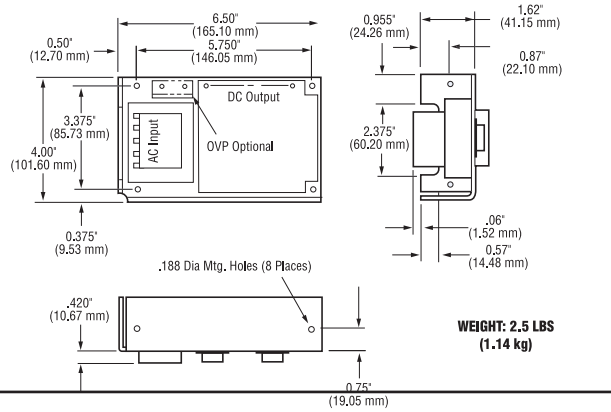

WEIGHT: 2.5 LBS
(1.14 kg)

BAA CASE

OVERALL SIZE
10.25" x 4.00" x 2.95"
(260.35 mm) x (101.60 mm) x (74.93 mm)

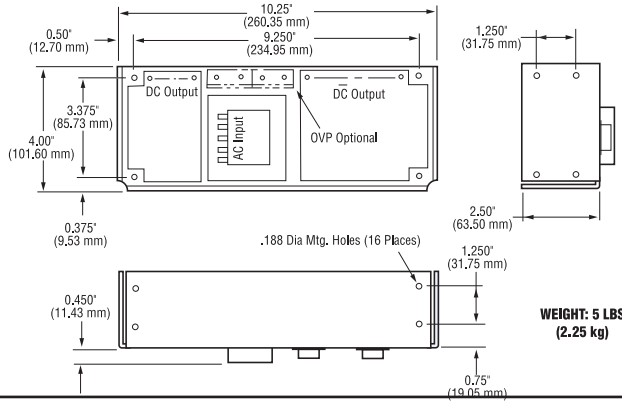

WEIGHT: 5 LBS
(2.25 kg)

B CASE

OVERALL SIZE
4.87" x 4.00" x 2.10"
(123.70 mm) x (101.60 mm) x (53.34 mm)

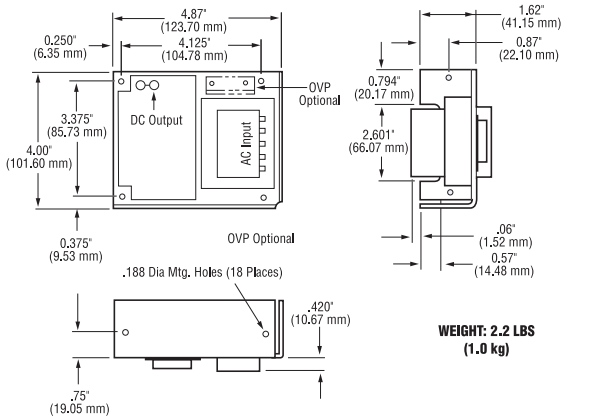

WEIGHT: 2.2 LBS
(1.0 kg)

C CASE

OVERALL SIZE
5.62" x 4.87" x 2.95"
(142.75 mm) x (123.70 mm) x (74.93 mm)

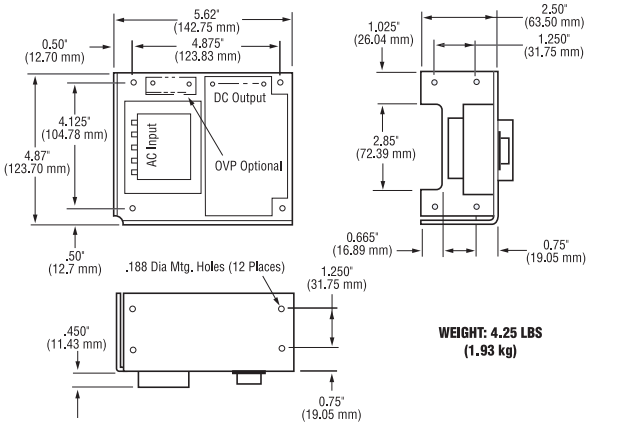

WEIGHT: 4.25 LBS
(1.93 kg)

BB CASE

OVERALL SIZE
7.00" x 4.87" x 2.95"
(177.80 mm) x (123.70 mm) x (74.93 mm)

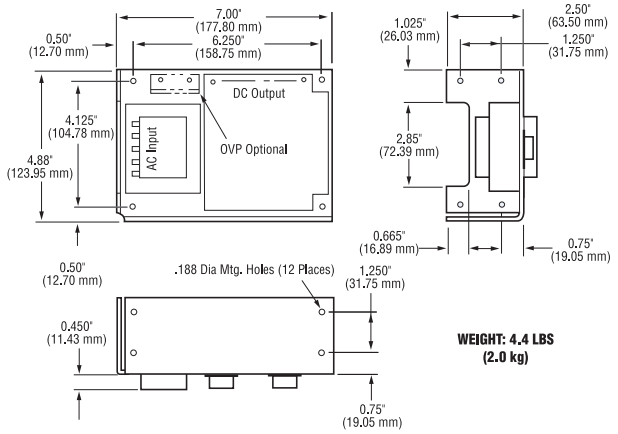

WEIGHT: 4.4 LBS
(2.0 kg)

CC CASE

OVERALL SIZE
9.38" x 4.87" x 3.28"
(238.25 mm) x (123.70 mm) x (83.31 mm)

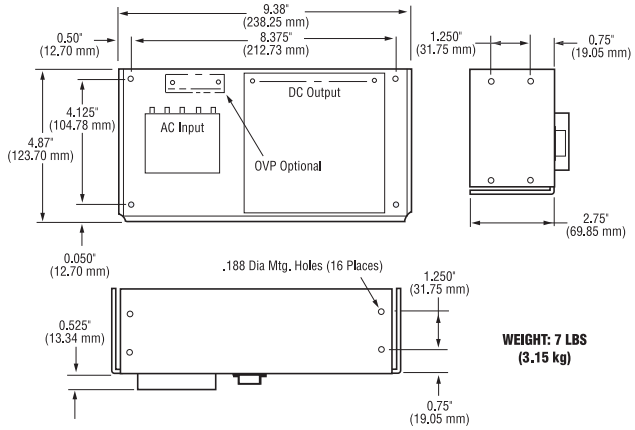

WEIGHT: 7 LBS
(3.15 kg)

CBB CASE

OVERALL SIZE
11.00" x 4.87" x 3.28"
(279.40 mm) x (123.70 mm) x (83.31 mm)

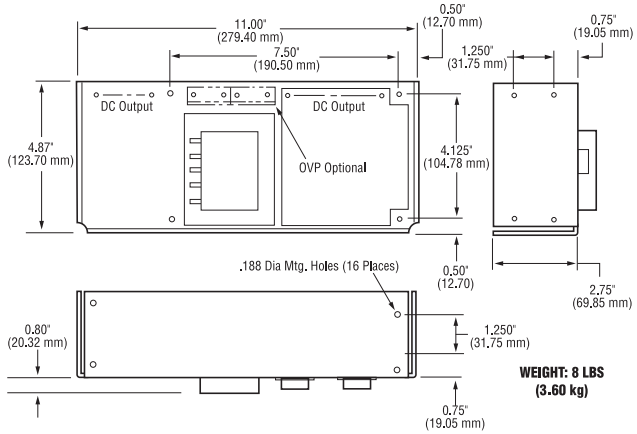

WEIGHT: 8 LBS
(3.60 kg)

DCC CASE

OVERALL SIZE
15.00" x 4.88" x 4.55"
(381.00 mm) x (123.95 mm) x (115.57 mm)

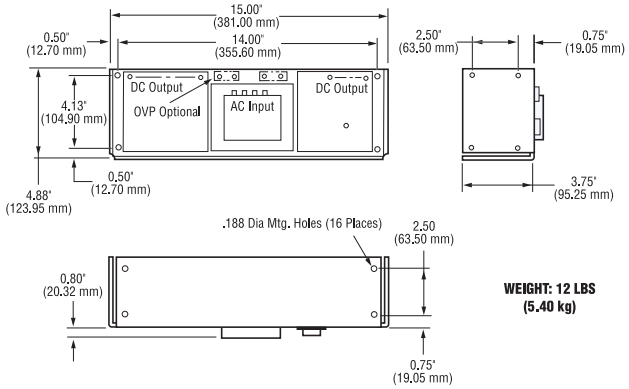

WEIGHT: 12 LBS
(5.40 kg)

D CASE

OVERALL SIZE
9.00" x 4.87" x 3.28"
(228.60 mm) x (123.70 mm) x (83.31 mm)

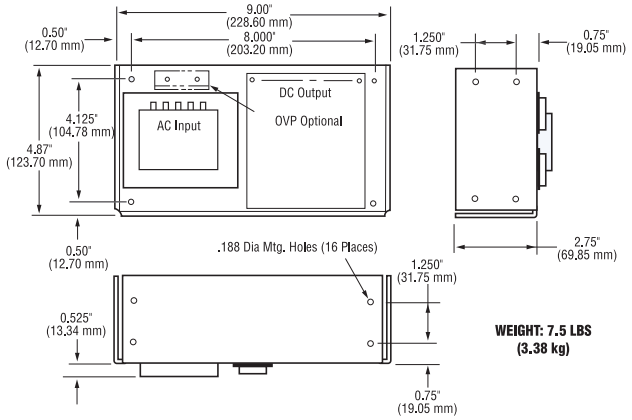

WEIGHT: 7.5 LBS
(3.38 kg)

E CASE

OVERALL SIZE
14.00" x 4.87" x 3.53"
(355.60 mm) x (123.70 mm) x (89.66 mm)

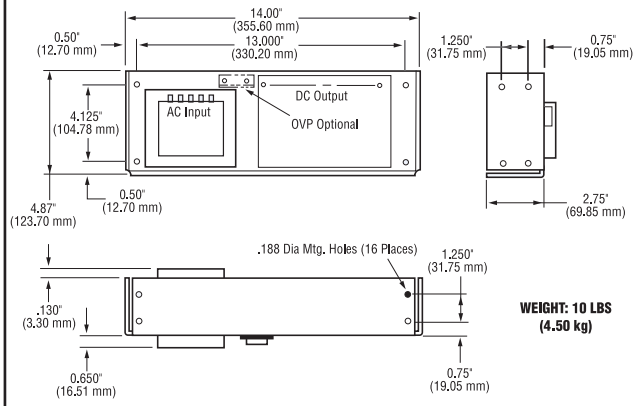

WEIGHT: 10 LBS
(4.50 kg)

DBB CASE

OVERALL SIZE
14.25" x 4.87" x 3.38"
(361.95 mm) x (123.70 mm) x (85.85 mm)

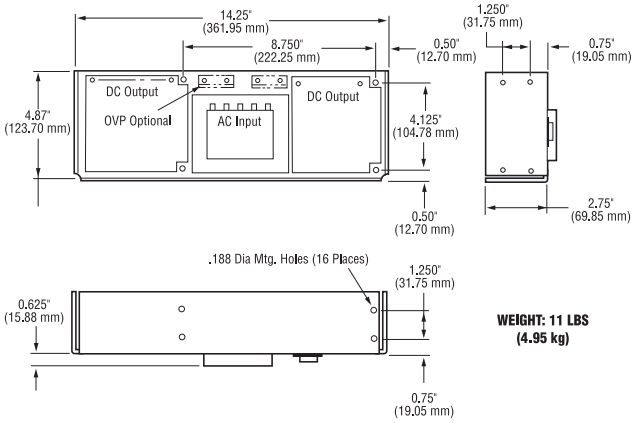

WEIGHT: 11 LBS
(4.95 kg)

F CASE

OVERALL SIZE
16.75" x 4.88" x 5.00"
(425.5 mm) x (123.95 mm) x (127.00 mm)

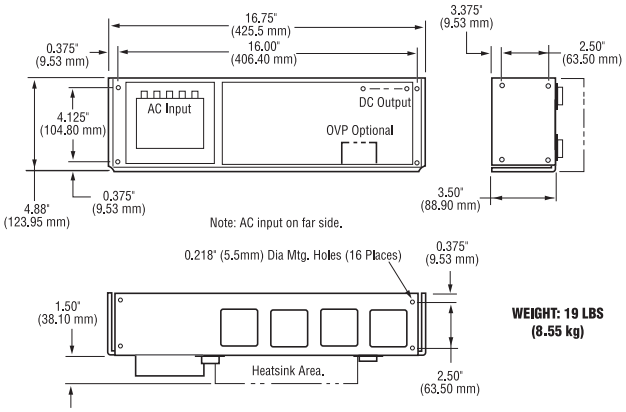

WEIGHT: 19 LBS
(8.55 kg)

N CASE

OVERALL SIZE
7.00" x 4.87" x 3.28"
(177.80 mm) x (123.70 mm) x (83.31 mm)

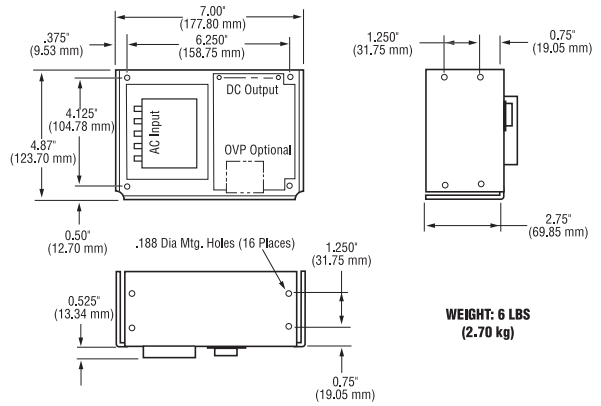

WEIGHT: 6 LBS
(2.70 kg)

CP510-A CASE

OVERALL SIZE
8.25" x 4.87" x 3.28"
(209.55 mm) x (123.70 mm) x (83.31 mm)

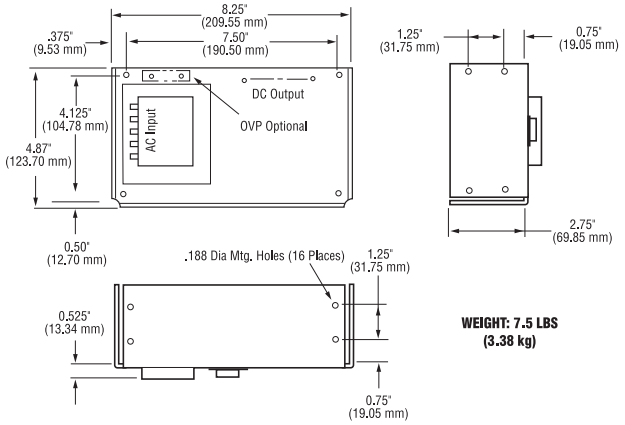

WEIGHT: 7.5 LBS
(3.38 kg)

CP131 CASE

OVERALL SIZE
11.00" x 4.87" x 3.28"
(279.40 mm) x (123.70 mm) x (83.31 mm)

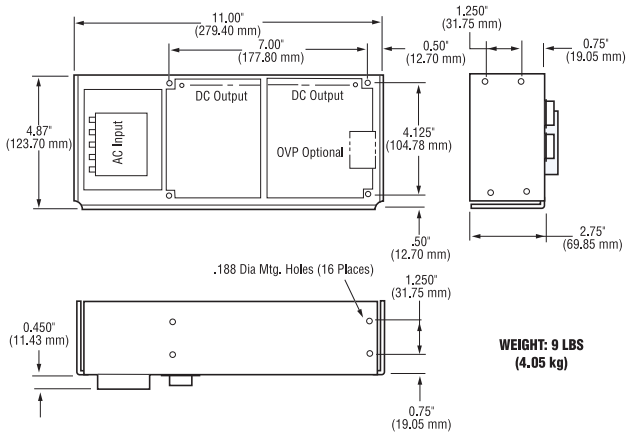

WEIGHT: 9 LBS
(4.05 kg)

NUCLEAR AND MEDICAL APPLICATIONS - Power-One products are not designed, intended for use in, or authorized for use as critical components in life support systems, equipment used in hazardous environments, or nuclear control systems without the express written consent of the respective divisional president of Power-One, Inc.

TECHNICAL REVISIONS - The appearance of products, including safety agency certifications pictured on labels, may change depending on the date manufactured. Specifications are subject to change without notice.

Компания «ЭлектроПласт» предлагает заключение долгосрочных отношений при поставках импортных электронных компонентов на взаимовыгодных условиях!

Наши преимущества:

- Оперативные поставки широкого спектра электронных компонентов отечественного и импортного производства напрямую от производителей и с крупнейших мировых складов;
- Поставка более 17-ти миллионов наименований электронных компонентов;
- Поставка сложных, дефицитных, либо снятых с производства позиций;
- Оперативные сроки поставки под заказ (от 5 рабочих дней);
- Экспресс доставка в любую точку России;
- Техническая поддержка проекта, помощь в подборе аналогов, поставка прототипов;
- Система менеджмента качества сертифицирована по Международному стандарту ISO 9001;
- Лицензия ФСБ на осуществление работ с использованием сведений, составляющих государственную тайну;
- Поставка специализированных компонентов (Xilinx, Altera, Analog Devices, Intersil, Interpoint, Microsemi, Aeroflex, Peregrine, Syfer, Eurofarad, Texas Instrument, Miteq, Cobham, E2V, MA-COM, Hittite, Mini-Circuits,General Dynamics и др.);

Помимо этого, одним из направлений компании «ЭлектроПласт» является направление «Источники питания». Мы предлагаем Вам помощь Конструкторского отдела:

- Подбор оптимального решения, техническое обоснование при выборе компонента;
- Подбор аналогов;
- Консультации по применению компонента;
- Поставка образцов и прототипов;
- Техническая поддержка проекта;
- Защита от снятия компонента с производства.

Как с нами связаться

Телефон: 8 (812) 309 58 32 (многоканальный)
Факс: 8 (812) 320-02-42
Электронная почта: org@eplast1.ru
Адрес: 198099, г. Санкт-Петербург, ул. Калинина, дом 2, корпус 4, литера А.