FAIRCHILD™

Is Now Part of

ON Semiconductor®

To learn more about ON Semiconductor, please visit our website at
www.onsemi.com

Please note: As part of the Fairchild Semiconductor integration, some of the Fairchild orderable part numbers will need to change in order to meet ON Semiconductor's system requirements. Since the ON Semiconductor product management systems do not have the ability to manage part nomenclature that utilizes an underscore (_), the underscore (_) in the Fairchild part numbers will be changed to a dash (-). This document may contain device numbers with an underscore (_). Please check the ON Semiconductor website to verify the updated device numbers. The most current and up-to-date ordering information can be found at www.onsemi.com. Please email any questions regarding the system integration to Fairchild_questions@onsemi.com.

ON Semiconductor and the ON Semiconductor logo are trademarks of Semiconductor Components Industries, LLC dba ON Semiconductor or its subsidiaries in the United States and/or other countries. ON Semiconductor owns the rights to a number of patents, trademarks, copyrights, trade secrets, and other intellectual property. A listing of ON Semiconductor's product/patent coverage may be accessed at www.onsemi.com/site/pdf/Patent-Marking.pdf. ON Semiconductor reserves the right to make changes without further notice to any products herein. ON Semiconductor makes no warranty, representation or guarantee regarding the suitability of its products for any particular purpose, nor does ON Semiconductor assume any liability arising out of the application or use of any product or circuit, and specifically disclaims any and all liability, including without limitation special, consequential or incidental damages. Buyer is responsible for its products and applications using ON Semiconductor products, including compliance with all laws, regulations and safety requirements or standards, regardless of any support or applications information provided by ON Semiconductor. "Typical" parameters which may be provided in ON Semiconductor data sheets and/or specifications can and do vary in different applications and actual performance may vary over time. All operating parameters, including "Typicals" must be validated for each customer application by customer's technical experts. ON Semiconductor does not convey any license under its patent rights nor the rights of others. ON Semiconductor products are not designed, intended, or authorized for use as a critical component in life support systems or any FDA Class 3 medical devices or medical devices with a same or similar classification in a foreign jurisdiction or any devices intended for implantation in the human body. Should Buyer purchase or use ON Semiconductor products for any such unintended or unauthorized application, Buyer shall indemnify and hold ON Semiconductor and its officers, employees, subsidiaries, affiliates, and distributors harmless against all claims, costs, damages, and expenses, and reasonable attorney fees arising out of, directly or indirectly, any claim of personal injury or death associated with such unintended or unauthorized use, even if such claim alleges that ON Semiconductor was negligent regarding the design or manufacture of the part. ON Semiconductor is an Equal Opportunity/Affirmative Action Employer. This literature is subject to all applicable copyright laws and is not for resale in any manner.

FAIRCHILD SEMICONDUCTOR®

February 2011

74AC14, 74ACT14
Hex Inverter with Schmitt Trigger Input

Features

- I_{CC} reduced by 50%
- Outputs source/sink 24mA
- 74ACT14 has TTL-compatible inputs

General Description

The 74AC14 and 74ACT14 contain six inverter gates each with a Schmitt trigger input. They are capable of transforming slowly changing input signals into sharply defined, jitter-free output signals. In addition, they have a greater noise margin than conventional inverters.

The 74AC14 and 74ACT14 have hysteresis between the positive-going and negative-going input thresholds (typically 1.0V) which is determined internally by transistor ratios and is essentially insensitive to temperature and supply voltage variations.

Ordering Information

Order Number	Package Number	Package Description
74AC14SC	M14A	14-Lead Small Outline Integrated Circuit (SOIC), JEDEC MS-012, 0.150" Narrow
74AC14SJ	M14D	14-Lead Small Outline Package (SOP), EIAJ TYPE II, 5.3mm Wide
74AC14MTC	MTC14	14-Lead Thin Shrink Small Outline Package (TSSOP), JEDEC MO-153, 4.4mm Wide
74ACT14SC	M14A	14-Lead Small Outline Integrated Circuit (SOIC), JEDEC MS-012, 0.150" Narrow
74ACT14MTC	MTC14	14-Lead Thin Shrink Small Outline Package (TSSOP), JEDEC MO-153, 4.4mm Wide

Device also available in Tape and Reel. Specify by appending suffix letter “X” to the ordering number.

©1988 Fairchild Semiconductor Corporation

Connection Diagram

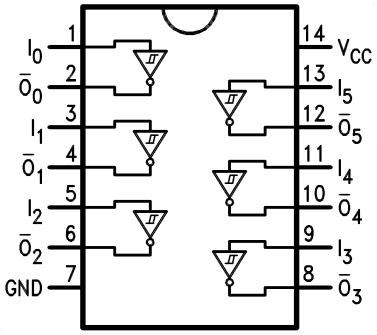

Pin Description

Pin Names	Description
I_n	Inputs
$\overline{O}_n$	Outputs

Logic Symbol

IEEE/IEC

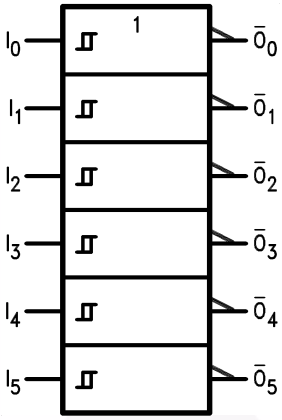

Function Table

Input	Output
A	$\overline{\mathbf{O}}$
L	H
H	L

Absolute Maximum Ratings

Stresses exceeding the absolute maximum ratings may damage the device. The device may not function or be operable above the recommended operating conditions and stressing the parts to these levels is not recommended. In addition, extended exposure to stresses above the recommended operating conditions may affect device reliability. The absolute maximum ratings are stress ratings only.

Symbol	Parameter	Rating
V_{CC}	Supply Voltage	–0.5V to +7.0V
I_{IK}	DC Input Diode Current	
	$V_I = –0.5V$	–20mA
	$V_I = V_{CC} + 1.5$	+20mA
V_I	DC Input Voltage	–0.5V to V_{CC} + 1.5V
I_{OK}	DC Output Diode Current	
	$V_O = –0.5V$	–20mA
	$V_O = V_{CC} + 0.5V$	+20mA
V_O	DC Output Voltage	–0.5V to V_{CC} + 0.5V
I_O	DC Output Source or Sink Current	±50mA
I_{CC} or I_{GND}	DC V_{CC} or Ground Current per Output Pin	±50mA
T_{STG}	Storage Temperature	–65°C to +150°C
T_J	Junction Temperature	140°C

Recommended Operating Conditions

The Recommended Operating Conditions table defines the conditions for actual device operation. Recommended operating conditions are specified to ensure optimal performance to the datasheet specifications. Fairchild does not recommend exceeding them or designing to absolute maximum ratings.

Symbol	Parameter	Rating
V_{CC}	Supply Voltage	
	AC	2.0V to 6.0V
	ACT	4.5V to 5.5V
V_I	Input Voltage	0V to V_{CC}
V_O	Output Voltage	0V to V_{CC}
T_A	Operating Temperature	–40°C to +85°C

DC Electrical Characteristics for AC

Symbol	Parameter	V_{CC} (V)	Conditions	T_A = +25°C Typ	T_A = +25°C Guaranteed Limits	T_A = –40°C to +85°C Guaranteed Limits	Units
V_{OH}	Minimum HIGH Level Output Voltage	3.0	I_{OUT} = –50µA	2.99	2.9	2.9	V
		4.5		4.49	4.4	4.4	
		5.5		5.49	5.4	5.4	
		3.0	I_{OH} = 12mA		2.56	2.46	
		4.5	I_{OH} = 24mA		3.86	3.76	
		5.5	I_{OH} = 24mA(1)		4.86	4.76	
V_{OL}	Maximum LOW Level Output Voltage	3.0	I_{OUT} = 50µA	0.002	0.1	0.1	V
		4.5		0.001	0.1	0.1	
		5.5		0.001	0.1	0.1	
		3.0	I_{OL} = 12mA		0.36	0.44	
		4.5	I_{OL} = 24mA		0.36	0.44	
		5.5	I_{OL} = 24mA(1)		0.36	0.44	
I_{IN}(3)	Maximum Input Leakage Current	5.5	$V_I = V_{CC}$, GND		±0.1	±1.0	µA
V_{t+}	Maximum Positive Threshold	3.0	T_A = Worst Case		2.2	2.2	V
		4.5			3.2	3.2	
		5.5			3.9	3.9	
V_{t-}	Minimum Negative Threshold	3.0	T_A = Worst Case		0.5	0.5	V
		4.5			0.9	0.9	
		5.5			1.1	1.1	
$V_{H(MAX)}$	Maximum Hysteresis	3.0	T_A = Worst Case		1.2	1.2	V
		4.5			1.4	1.4	
		5.5			1.6	1.6	
$V_{H(MIN)}$	Minimum Hysteresis	3.0	T_A = Worst Case		0.3	0.3	V
		4.5			0.4	0.4	
		5.5			0.5	0.5	
I_{OLD}	Minimum Dynamic	5.5	V_{OLD} = 1.65V Max.			75	mA
I_{OHD}	Output Current(2)	5.5	V_{OHD} = 3.85V Min.			–75	mA
I_{CC}(3)	Maximum Quiescent Supply Current	5.5	$V_{IN} = V_{CC}$ or GND		2.0	20.0	µA

Notes:

1. All outputs loaded; thresholds on input associated with output under test.
2. Maximum test duration 2.0ms, one output loaded at a time.
3. I_{IN} and I_{CC} @ 3.0V are guaranteed to be less than or equal to the respective limit @ 5.5V V_{CC}.

DC Electrical Characteristics for ACT

Symbol	Parameter	V_{CC} (V)	Conditions	T_A = +25°C Typ.	T_A = –40°C to +85°C Guaranteed Limits		Units
V_{IH}	Minimum HIGH Level Input Voltage	4.5	V_{OUT} = 0.1V or V_{CC} – 0.1V	1.5	2.0	2.0	V
		5.5		1.5	2.0	2.0	
V_{IL}	Maximum LOW Level Input Voltage	4.5	V_{OUT} = 0.1V or V_{CC} – 0.1V	1.5	0.8	0.8	V
		5.5		1.5	0.8	0.8	
V_{OH}	Minimum HIGH Level Output Voltage	4.5	I_{OUT} = –50µA	4.49	4.34	4.4	V
		5.5		5.49	5.4	5.4	
		4.5	V_{IN} = V_{IL} or V_{IH}, I_{OH} = –24mA		3.86	3.76	
		5.5	V_{IN} = V_{IL} or V_{IH}, I_{OH} = –24mA(4)		4.86	4.76	
V_{OL}	Maximum LOW Level Output Voltage	4.5	I_{OUT} = 50µA	0.001	0.1	0.1	V
		5.5		0.001	0.1	0.1	
		4.5	V_{IN} = V_{IL} or V_{IH}, I_{OL} = 24mA		0.36	0.44	
		5.5	V_{IN} = V_{IL} or V_{IH}, I_{OL} = 24mA(4)		0.36	0.44	
I_{IN}	Maximum Input Leakage Current	5.5	V_I = V_{CC}, GND		±0.1	±1.0	µA
$V_{H(MAX)}$	Maximum Hysteresis	4.5	T_A = Worst Case		1.4	1.4	V
		5.5			1.6	1.6	
$V_{H(MIN)}$	Minimum Hysteresis	4.5	T_A = Worst Case		0.4	0.4	V
		5.5			0.5	0.5	
V_{t+}	Maximum Positive Threshold	4.5	T_A = Worst Case		2.0	2.0	V
		5.5			2.0	2.0	
V_{t-}	Minimum Negative Threshold	4.5	T_A = Worst Case		0.8	0.8	V
		5.5			0.8	0.8	
I_{CCT}	Maximum I_{CC}/Input	5.5	V_I = V_{CC} – 2.1V	0.6		1.5	mA
I_{OLD}	Minimum Dynamic Output Current(5)	5.5	V_{OLD} = 1.65V Max.			75	mA
I_{OHD}		5.5	V_{OHD} = 3.85V Min.			–75	mA
I_{CC}	Maximum Quiescent Supply Current	5.5	V_{IN} = V_{CC} or GND		2.0	20.0	µA

Notes:

4. All outputs loaded; thresholds on input associated with output under test.
5. Maximum test duration 2.0ms, one output loaded at a time.

AC Electrical Characteristics for AC

Symbol	Parameter	V_{CC} (V)[6]	T_A = +25°C, C_L = 50pF			T_A = –40°C to +85°C, C_L = 50pF		Units
			Min.	Typ.	Max.	Min.	Max.	
t_{PLH}	Propagation Delay	3.3	1.5	9.5	13.5	1.5	15.0	ns
		5.0	1.5	7.0	10.0	1.5	11.0	
t_{PHL}	Propagation Delay	3.3	1.5	7.5	11.5	1.5	13.0	ns
		5.0	1.5	6.0	8.5	1.5	9.5	

Note:

6. Voltage range 3.3 is 3.3V ± 0.3V. Voltage range 5.0 is 5.0V ± 0.5V.

AC Electrical Characteristics for ACT

Symbol	Parameter	V_{CC} (V)[7]	T_A = +25°C, C_L = 50pF			T_A = –40°C to +85°C, C_L = 50pF		Units
			Min.	Typ.	Max.	Min.	Max.	
t_{PLH}	Propagation Delay	5.0	3.0	8.0	10.0	3.0	11.0	ns
t_{PHL}	Propagation Delay	5.0	3.0	8.0	10.0	3.0	11.0	ns

Note:

7. Voltage Range 5.0 is 5.0V ± 0.5V.

Capacitance

Symbol	Parameter	Conditions	Typ	Units
C_{IN}	Input Capacitance	V_{CC} = OPEN	4.5	pF
C_{PD}	Power Dissipation Capacitance	V_{CC} = 5.0V		
	AC		25.0	pF
	ACT		80	

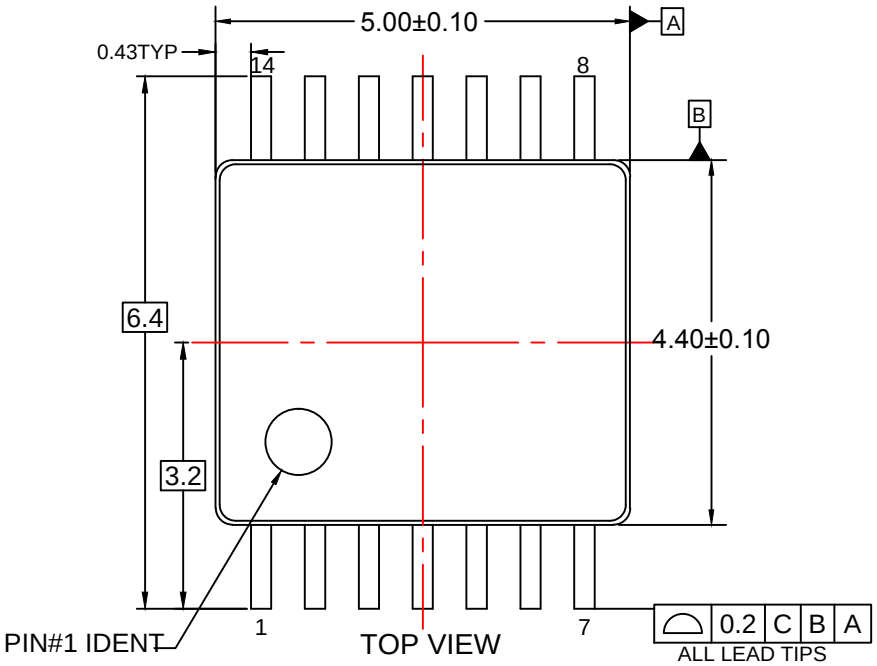

TOP VIEW

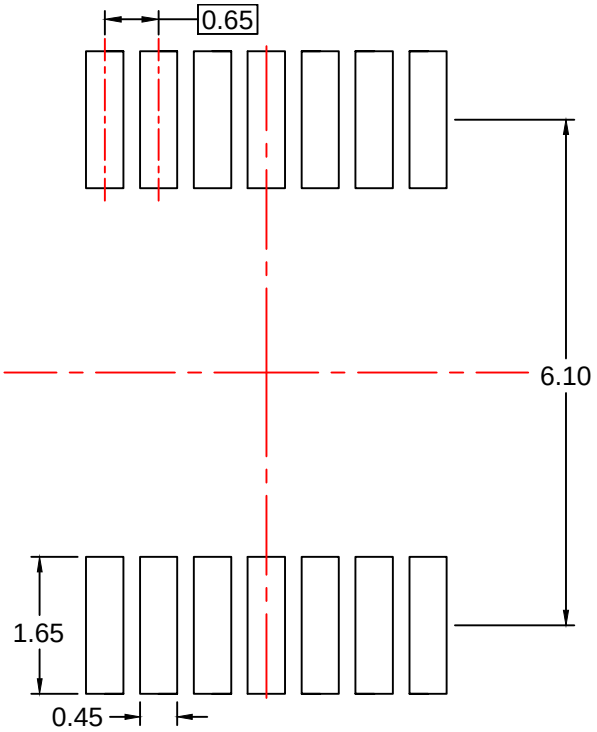

RECOMMENDED LAND PATTERN

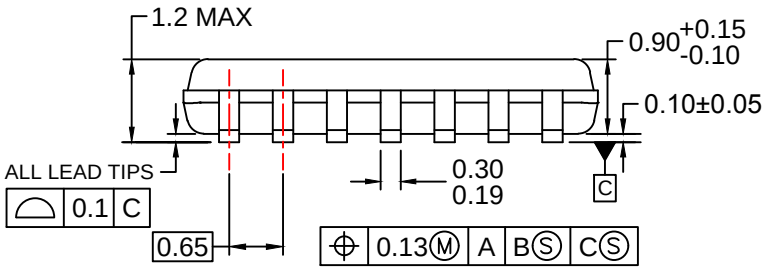

FRONT VIEW

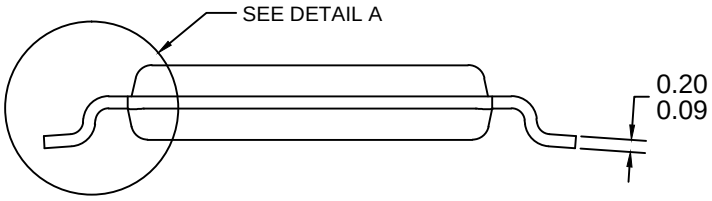

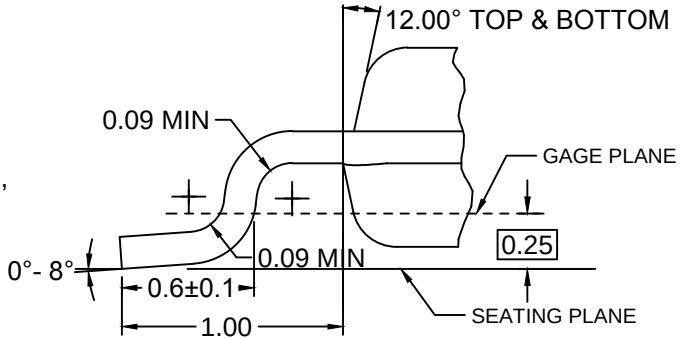

DETAIL A

NOTES:

A. CONFORMS TO JEDEC REGISTRATION MO-153, VARIATION AB, REF NOTE 6

B. DIMENSIONS ARE IN MILLIMETERS.

C. DIMENSIONS ARE EXCLUSIVE OF BURRS, MOLD FLASH, AND TIE BAR EXTRUSIONS

D. DIMENSIONING AND TOLERANCES PER ANSI Y14.5M, 2009.

E. LANDPATTERN STANDARD: SOP65P640X110-14M.

F. DRAWING FILE NAME: MKT-MTC14rev7.

FAIRCHILD

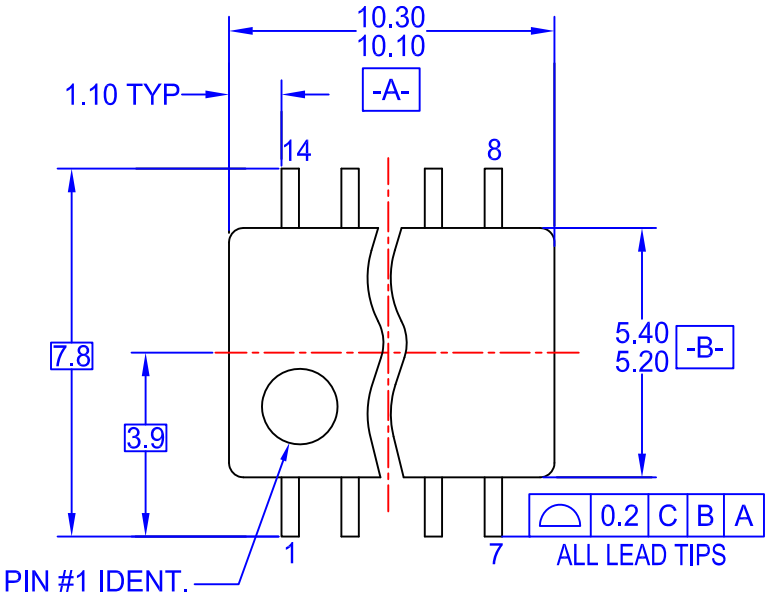

TOP VIEW

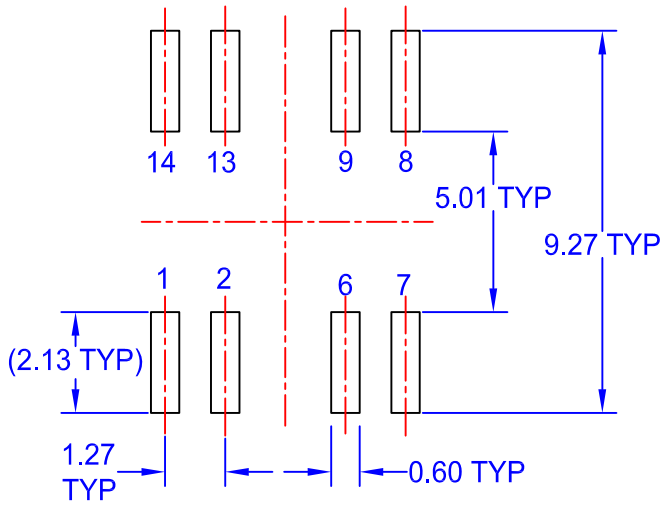

LAND PATTERN RECOMMENDATION

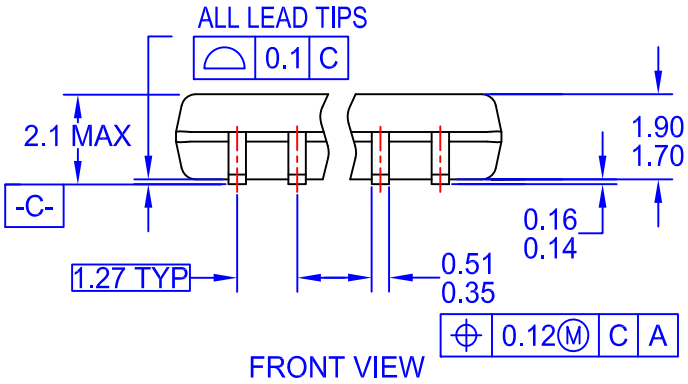

FRONT VIEW

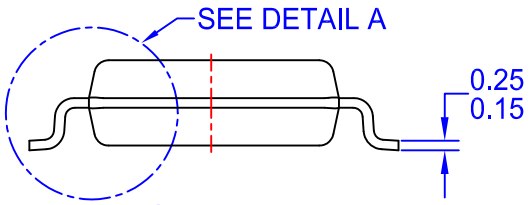

SIDE VIEW

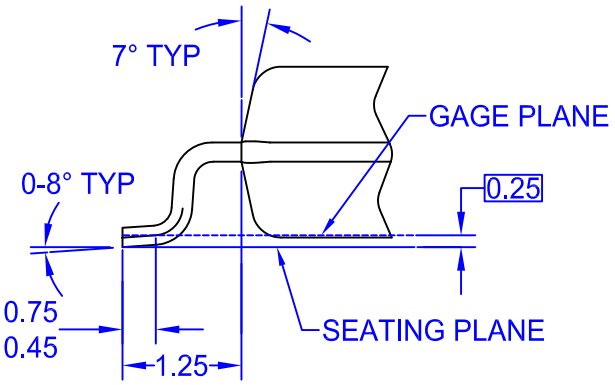

DETAIL A

NOTES:

A. CONFORMS TO EIAJ EDR-7320 REGISTRATION, ESTABLISHED IN DECEMBER, 1998.
B. DIMENSIONS ARE IN MILLIMETERS.
C. DIMENSIONS ARE EXCLUSIVE OF BURRS, MOLD FLASH, AND TIE BAR EXTRUSIONS.
D. DRAWING FILENAME: MKT-M14Drev4.

FAIRCHILD ™

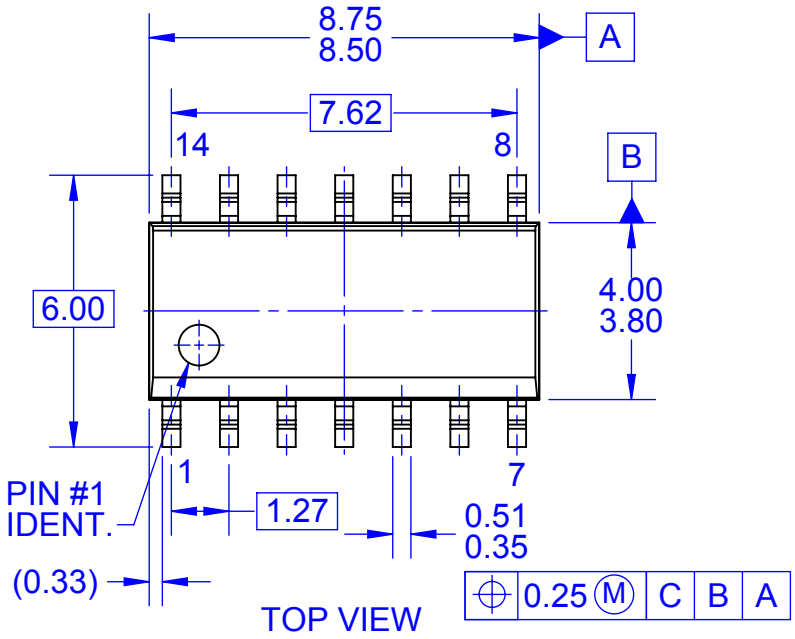

TOP VIEW

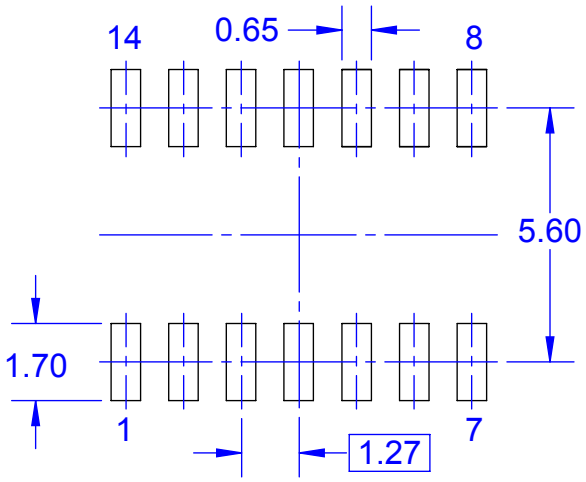

LAND PATTERN RECOMMENDATION

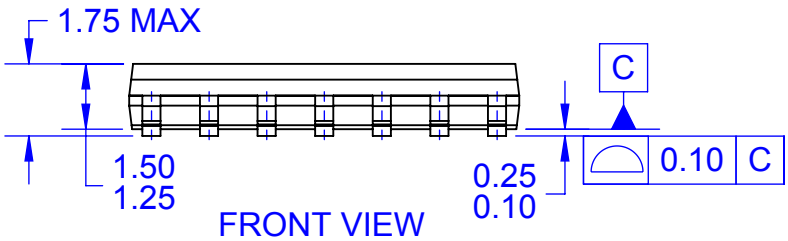

FRONT VIEW

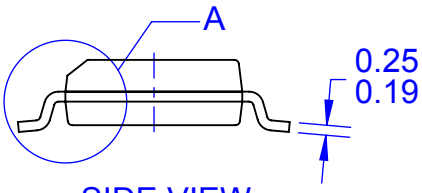

SIDE VIEW

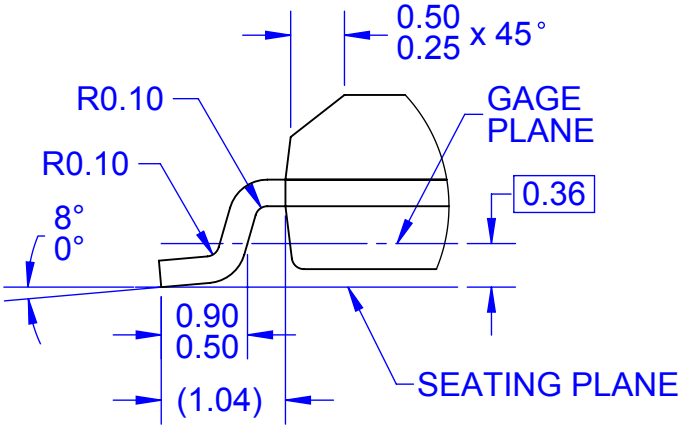

DETAIL A
SCALE 16 : 1

NOTES:

A. CONFORMS TO JEDEC MS-012, VARIATION AB, ISSUE C
B. ALL DIMENSIONS ARE IN MILLIMETERS
C. DIMENSIONS DO NOT INCLUDE MOLD FLASH OR BURRS
D. LAND PATTERN STANDARD: SOIC127P600X145-14M
E. CONFORMS TO ASME Y14.5M, 2009
D. DRAWING FILENAME: MKT-M14Arev14

FAIRCHILD ™

ON Semiconductor and ON are trademarks of Semiconductor Components Industries, LLC dba ON Semiconductor or its subsidiaries in the United States and/or other countries. ON Semiconductor owns the rights to a number of patents, trademarks, copyrights, trade secrets, and other intellectual property. A listing of ON Semiconductor's product/patent coverage may be accessed at www.onsemi.com/site/pdf/Patent−Marking.pdf. ON Semiconductor reserves the right to make changes without further notice to any products herein. ON Semiconductor makes no warranty, representation or guarantee regarding the suitability of its products for any particular purpose, nor does ON Semiconductor assume any liability arising out of the application or use of any product or circuit, and specifically disclaims any and all liability, including without limitation special, consequential or incidental damages. Buyer is responsible for its products and applications using ON Semiconductor products, including compliance with all laws, regulations and safety requirements or standards, regardless of any support or applications information provided by ON Semiconductor. "Typical" parameters which may be provided in ON Semiconductor data sheets and/or specifications can and do vary in different applications and actual performance may vary over time. All operating parameters, including "Typicals" must be validated for each customer application by customer's technical experts. ON Semiconductor does not convey any license under its patent rights nor the rights of others. ON Semiconductor products are not designed, intended, or authorized for use as a critical component in life support systems or any FDA Class 3 medical devices or medical devices with a same or similar classification in a foreign jurisdiction or any devices intended for implantation in the human body. Should Buyer purchase or use ON Semiconductor products for any such unintended or unauthorized application, Buyer shall indemnify and hold ON Semiconductor and its officers, employees, subsidiaries, affiliates, and distributors harmless against all claims, costs, damages, and expenses, and reasonable attorney fees arising out of, directly or indirectly, any claim of personal injury or death associated with such unintended or unauthorized use, even if such claim alleges that ON Semiconductor was negligent regarding the design or manufacture of the part. ON Semiconductor is an Equal Opportunity/Affirmative Action Employer. This literature is subject to all applicable copyright laws and is not for resale in any manner.

PUBLICATION ORDERING INFORMATION

LITERATURE FULFILLMENT:
Literature Distribution Center for ON Semiconductor
19521 E. 32nd Pkwy, Aurora, Colorado 80011 USA
Phone: 303−675−2175 or 800−344−3860 Toll Free USA/Canada
Fax: 303−675−2176 or 800−344−3867 Toll Free USA/Canada
Email: orderlit@onsemi.com

N. American Technical Support: 800−282−9855 Toll Free USA/Canada
Europe, Middle East and Africa Technical Support:
Phone: 421 33 790 2910
Japan Customer Focus Center
Phone: 81−3−5817−1050

ON Semiconductor Website: **www.onsemi.com**

Order Literature: http://www.onsemi.com/orderlit

For additional information, please contact your local Sales Representative

Mouser Electronics

Authorized Distributor

Click to View Pricing, Inventory, Delivery & Lifecycle Information:

ON Semiconductor:

74AC14MTCX 74AC14MTC 74AC14SCX 74AC14SJX 74AC14PC 74AC14SC 74AC14SJ

Компания «ЭлектроПласт» предлагает заключение долгосрочных отношений при поставках импортных электронных компонентов на взаимовыгодных условиях!

Наши преимущества:

- Оперативные поставки широкого спектра электронных компонентов отечественного и импортного производства напрямую от производителей и с крупнейших мировых складов;
- Поставка более 17-ти миллионов наименований электронных компонентов;
- Поставка сложных, дефицитных, либо снятых с производства позиций;
- Оперативные сроки поставки под заказ (от 5 рабочих дней);
- Экспресс доставка в любую точку России;
- Техническая поддержка проекта, помощь в подборе аналогов, поставка прототипов;
- Система менеджмента качества сертифицирована по Международному стандарту ISO 9001;
- Лицензия ФСБ на осуществление работ с использованием сведений, составляющих государственную тайну;
- Поставка специализированных компонентов (Xilinx, Altera, Analog Devices, Intersil, Interpoint, Microsemi, Aeroflex, Peregrine, Syfer, Eurofarad, Texas Instrument, Miteq, Cobham, E2V, MA-COM, Hittite, Mini-Circuits,General Dynamics и др.);

Помимо этого, одним из направлений компании «ЭлектроПласт» является направление «Источники питания». Мы предлагаем Вам помощь Конструкторского отдела:

- Подбор оптимального решения, техническое обоснование при выборе компонента;
- Подбор аналогов;
- Консультации по применению компонента;
- Поставка образцов и прототипов;
- Техническая поддержка проекта;
- Защита от снятия компонента с производства.

Как с нами связаться

Телефон: 8 (812) 309 58 32 (многоканальный)
Факс: 8 (812) 320-02-42
Электронная почта: org@eplast1.ru
Адрес: 198099, г. Санкт-Петербург, ул. Калинина, дом 2, корпус 4, литера А.