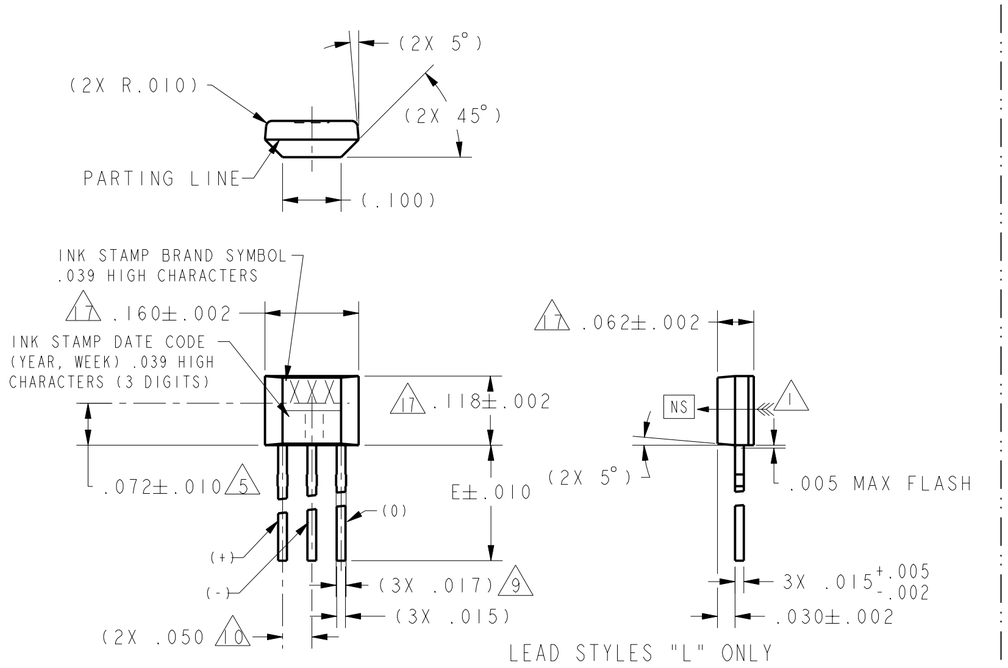

LEAD STYLES "L" ONLY

LEAD STYLES

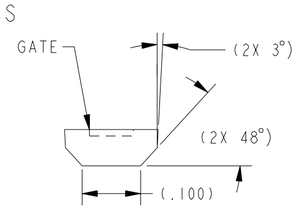

ALL EXCEPT "L" LEAD STYLES

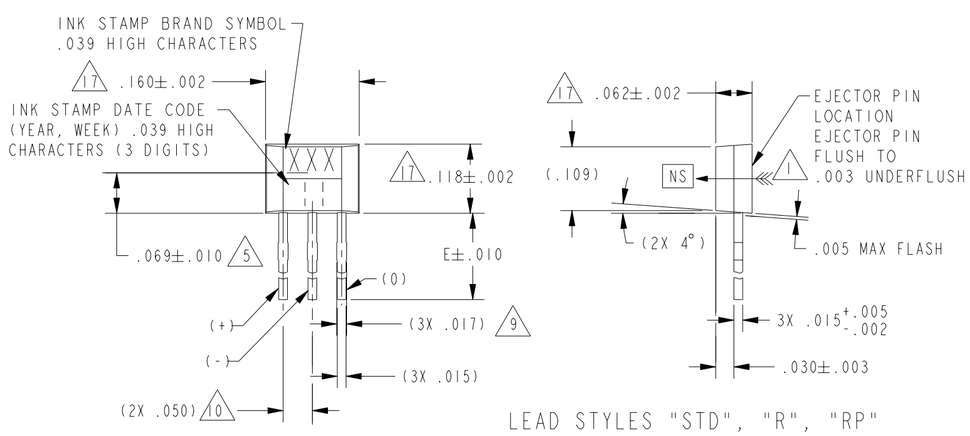

LEAD STYLES "STD", "R", "RP"

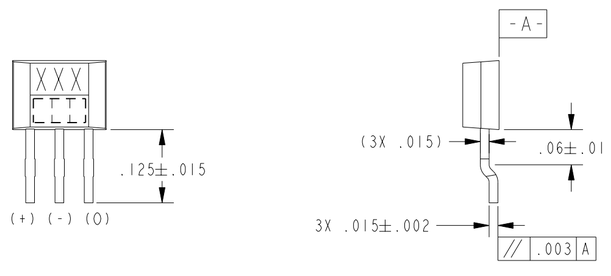

LEAD STYLES "S" & "SP" 11

ANSI Y14.5M-1982 APPLIES

NOTES

1. THE MAGNETIC FLUX USED TO OPERATE THE SWITCH MUST BE IN THE DIRECTION AND LOCATION SHOWN (THIS ASSUMES THE CONVENTION THAT THE DIRECTION OF THE EXTERNAL FLUX OF A MAGNET IS FROM THE NORTH TO THE SOUTH POLE OF THE MAGNET)
2. THE MAGNETIC FIELD STRENGTH (GAUSS) REQUIRED TO CAUSE THE SWITCH TO CHANGE STATE (OPERATE AND RELEASE) WILL BE AS TABULATED. TO TEST THE SWITCH AGAINST THE SPECIFIED LIMITS, THE SWITCH MUST BE PLACED IN A UNIFORM MAGNETIC FIELD
3. ABSOLUTE MAXIMUM RATINGS ARE THE EXTREME LIMITS THE DEVICE WILL MOMENTARILY WITHSTAND WITHOUT DAMAGE TO THE DEVICE. ELECTRICAL AND MAGNETIC CHARACTERISTICS ARE NOT GUARANTEED IF THE RATED VOLTAGE AND/OR CURRENTS ARE EXCEEDED NOR WILL THE DEVICE NECESSARILY OPERATE AT ABSOLUTE MAXIMUM RATINGS
4. AMMOPACK STYLE "T2" & "T3". 24 SWITCHES BETWEEN FOLDS, SKIP 1 SPACE AT FOLD. MAY BE REFERRED TO AS "FAN FOLD"
5. HALL ELEMENT LOCATION WITH INTEGRATED CIRCUIT TOLERANCE
6 - LEADS MUST BE ADEQUATELY SUPPORTED DURING ANY FORMING/ SHEERING OPERATION TO ASSURE THAT THE LEADS ARE NOT STRESSED WITHIN THE PLASTIC
7 - PCB WAVE SOLDERING GUIDELINES ARE AS FOLLOWS: 250°C TO 260°C SOLDERING TEMPERATURE 3 SECONDS MAX SOLDERING TIME
8. 28 VDC MAX EXTERNALLY APPLIED OUTPUT VOLTAGE IN OFF CONDITION ONLY, -0.5 VDC LIMIT MAY BE APPLIED WITH SWITCH IN ON OR OFF CONDITION
9. BURRS ARE ALLOWED ONLY IF FULL LENGTH OF LEADS WILL PASS THROUGH Ø.023 HOLE. LEAD REFERENCE DIMENSIONS DO NOT INCLUDE SOLDER THICKNESS
10. DIMENSION REFERS TO THE LOCATION OF LEAD CENTERLINES AS THEY EXIT THE PLASTIC PACKAGE
11. TYPICAL DIMENSIONS NOT SHOWN IN LEAD STYLE "S"
12. SOME COMBINATIONS OF BASIC LISTING AND PACKING OPTIONS ARE NOT AVAILABLE
13. TAPE AND AMMOPACK PER EIA-468-A-1990
14. TAPE AND REEL PER EIA-481-A-1986
15. LEAD STRAIGHTNESS MAY BE DETERIORATED ON SOME UNITS BY BULK PACKAGING. APPLICATIONS HAVING A CRITICAL LEAD STRAIGHTNESS REQUIREMENT SHOULD USE A TAPE PACKAGING OPTION
16. SOURCE VOLTAGE IS 12VDC UNLESS OTHERWISE SPECIFIED
17. MOLDED PART DIMENSIONS DO NOT INCLUDE FLASH. FLASH IS LIMITED TO .005 MAX
18. THESE HALL EFFECT SENSORS MAY HAVE AN INITIAL OUTPUT IN EITHER THE ON OR OFF STATE IF POWERED UP WITH AN APPLIED MAGNETIC FIELD IN THE DIFFERENTIAL ZONE (APPLIED MAGNETIC FIELD > Brp AND < Bop). MICRO SWITCH RECOMMENDS THAT THE APPLICATION CIRCUIT DESIGNER ALLOW 10 MICROSECONDS AFTER SUPPLY VOLTAGE HAS REACHED 5 VOLTS FOR THE OUTPUT VOLTAGE TO STABILIZE

SS40 SERIES CHART 1	PAGE 1 OF 4	RELEASE NO. CO-75147B	REPLACES -
DRAWING NUMBER		ISSUE 16	

REVISIONS		
A	205183	GLH 26MAR02
B	206240	TSM 28AUG02
C	206425	JLH 11SEP02

DRAWN	GLH	26MAR02	CHECK
CHECK	SAV	26MAR02	CHECK

PTC/CAD 3D

THIS DRAWING COVERS A PROPRIETARY ITEM AND IS THE PROPERTY OF MICRO SWITCH, A DIVISION OF HONEYWELL. THIS DRAWING IS NOT TO BE COPIED OR USED WITHOUT THE APPROVAL OF MICRO SWITCH.

MICRO SWITCH a Honeywell Division
FED. MFG. CODE 91929

SOLID STATE SENSOR

CATALOG LISTING
SS40 SERIES CHART 1

THIRD ANGLE PROJECTION

SCALE 5:1

DO NOT SCALE PRINT

UNLESS OTHERWISE SPECIFIED TOLERANCES ARE

ONE PLACE	(.0)	±.030
TWO PLACES	(.00)	±.015
THREE PLACES	(.000)	±.005
ANGLES		±

WEIGHT

MICRO SWITCH
a Honeywell Division
FED. MFG. CODE 91929

SOLID STATE SENSOR

CATALOG LISTING
SS40 SERIES CHART 1

THIS DRAWING COVERS A PROPRIETARY ITEM AND IS THE PROPERTY OF MICRO SWITCH. A DIVISION OF HONEYWELL. THIS DRAWING IS NOT TO BE COPIED OR USED WITHOUT THE APPROVAL OF MICRO SWITCH

CATALOGING SYSTEM 12

PREFIX	SUFFIX
BASIC CATALOG LISTING: PACKAGE STYLE, MAGNETIC TYPE, ELECTRICAL/MAGNETIC SPECS	LEAD & PACKAGING OPTIONS: BULK, TAPE & REEL, POCKET TAPE & REEL

CHARACTERS IN THESE POSITIONS OF THE LISTING ARE BRANDED ON THE PRODUCT

OPTIONS

SS4 _ _ _ - _ _

SS4=PACKAGE STYLE

MAGNETIC TYPE
1=BIPOLAR
4=UNIPOLAR
6=LATCH
9=LINEAR

ELECTRICAL/MAGNETIC OPTIONS (A-K, & U-Z) A=STANDARD
B-K & U-Z=SPECIALS

SPECIAL FEATURE (BLANK, 1-9)
BLANK=STANDARD
1-9=SPECIALS

	DESCRIPTION	NOMINAL LEAD SPACING	NOMINAL "E" DIM LENGTH	PARTS PER CONTAINER
-	STANDARD, BULK PACK 15	.050	.590	1000/BAG
-T 2	TAPE, AMMOPACK	.100	.590	5000/BOX
-T 3	TAPE, AMMOPACK	.050	.590	5000/BOX
-S	SURF MOUNT, BULK PACK	.050	.125	1000/BAG
-S P	SURF MOUNT, POCKET TAPE	.050	.125	1000/REEL
-R	REDUCED LENGTH, BULK PACK	.050	.130	1000/BAG
-R P	REDUCED LENGTH, POCKET TAPE	.050	.130	1000/REEL
-L	LONG LEADS, BULK PACK	.050	.735	1000/BAG

TAPE PACKING OPTIONS

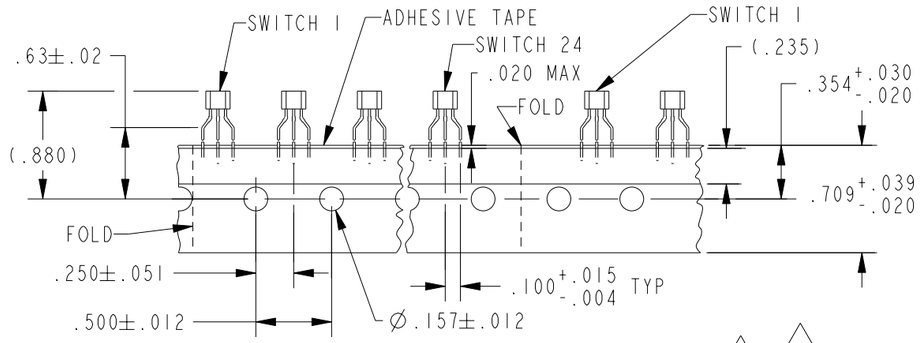

TAPE STYLE "T2" 4 13

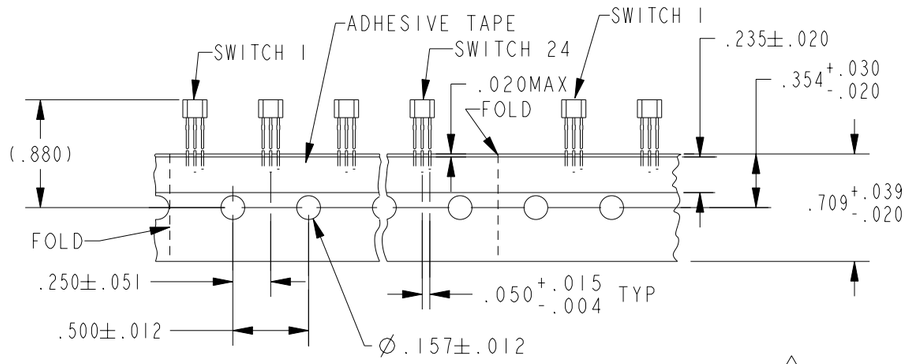

TAPE STYLE "T3" 4 13

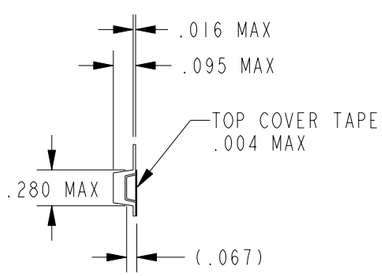

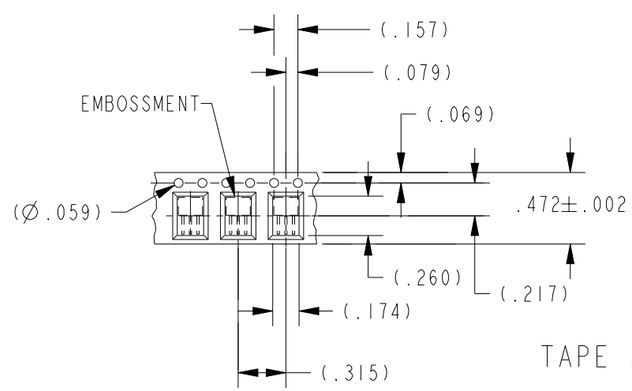

TAPE STYLE "SP" & "RP" 14

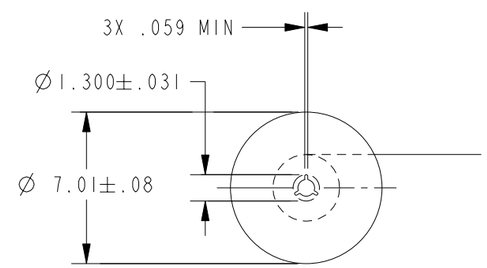

DIRECTION OF FEED FROM REEL

THIRD ANGLE PROJECTION

SCALE 5 : 1

DO NOT SCALE PRINT

UNLESS OTHERWISE SPECIFIED TOLERANCES ARE

ONE PLACE	(.0)	±.030
TWO PLACE	(.00)	±.015
THREE PLACE	(.000)	±.005
ANGLES		±

WEIGHT

ANSI Y14.5M-1982 APPLIES

CATALOG LISTING SS40 SERIES CHART 1
PAGE 2 OF 4
ISSUE 16
RELEASE NO. CO-75147B
REPLACES -

REVISIONS

A	CO93816	KED 18JAN99
B	CO94110	TSM 18AUG99
C	205183	GLH 26MAR02
D	206240	TSM 28AUG02
E	206425	JLH 11SEP02

DRAWN	KED	18JAN99
CHECK		
CHECK	JAF	18JAN99
CHECK		
CHECK		

PTC/CAD 3D

MICRO SWITCH
a Honeywell Division
FED. MFG. CODE 91929

SOLID STATE SENSOR

CATALOG LISTING
SS40 SERIES CHART 1

THIS DRAWING COVERS A PROPRIETARY ITEM AND IS THE PROPERTY OF MICRO SWITCH. A DIVISION OF HONEYWELL. THIS DRAWING IS NOT TO BE COPIED OR USED WITHOUT THE APPROVAL OF MICRO SWITCH

TABLE 1 - MAGNETIC AND ELECTRICAL SPECIFICATIONS 2 18

	-40°C	0°C	25°C	85°C	125°C	150°C
MIN OPERATE GAUSS						
SS41	NS	NS	NS	NS	NS	NS
SS41D	NS	NS	NS	NS	NS	NS
MAX OPERATE GAUSS						
SS41	200	150	150	150	200	250
SS41D	340	340	340	340	NS	NS
MIN RELEASE GAUSS						
SS41	-160	-160	-140	-150	-200	-250
SS41D	-340	-340	-340	-340	NS	NS
MAX RELEASE GAUSS						
SS41	NS	NS	NS	NS	NS	NS
SS41D	NS	NS	NS	NS	NS	NS
MIN DIFF GAUSS						
SS41	40	50	50	50	60	60
SS41D	40	40	40	40	NS	NS

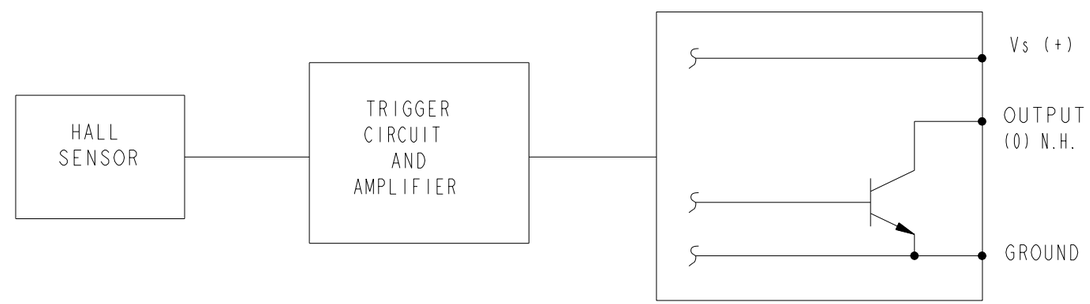

TABLE 2

	SS41	SS41D
MAGNETIC TYPE	BIPOLAR	BIPOLAR
BRAND SYMBOL	S41	S41
PACKING	BAG	BAG
SPECIFIED VOLTAGE RANGE	4.5 - 24	4.5 - 24
MAX Ioff milliamp	10.0	10.0
MAX Ion milliamp	11.3	11.3
RATED SINK CURRENT Ma	20	20
MAX Vsat VOLTS 25°C 16	0.4	0.4
MAX LEAKAGE AT 24V, µA	10	10
RISE TIME AT 25°C 10% TO 90% µS	1.5	1.5
FALL TIME AT 25°C 90% TO 10% µS	1.5	1.5
STORAGE TEMP °C	-40 TO +150	-40 TO +150
OPERATING TEMP °C	-40 TO +150	-40 TO +85

ABSOLUTE LIMITS

	SS41	SS41D
SUPPLY VOLTAGE	-28 TO +28	-24 TO +28
APPLIED OUTPUT VOLTAGE 8	-0.5 TO +28	-0.5 TO +28
OUTPUT CURRENT mA	20	20
MAGNETIC FLUX GAUSS	NO LIMIT	NO LIMIT

ANSI Y14.5M-1982 APPLIES

THIRD ANGLE PROJECTION
SCALE NONE
DO NOT SCALE PRINT
UNLESS OTHERWISE SPECIFIED TOLERANCES ARE

ONE PLACE	(.0)	±.030
TWO PLACE	(.00)	±.015
THREE PLACE	(.000)	±.005
ANGLES		±

WEIGHT

CATALOG LISTING SS40 SERIES CHART 1
PAGE 3 OF 4
RELEASE NO. CO-75147B
REPLACES
ISSUE 16
CHECK
REVISIONS
A CO93816 KED 18JAN99
B CO94110 TSM 18AUG99
C 205183 GLH 26MAR02
D 206240 TSM 28AUG02
E 206425 JLH 11SEP02
CHECK
18JAN99
JAF
CHECK
18JAN99
PTC/CAD 3D
DRAWN KED

MICROSWITCH
a Honeywell Division
FED. MFG. CODE 91929

SOLID STATE SENSOR

CATALOG LISTING
SS40 SERIES CHART 1

THIS DRAWING COVERS A PROPRIETARY ITEM AND IS THE PROPERTY OF MICRO SWITCH. A DIVISION OF HONEYWELL. THIS DRAWING IS NOT TO BE COPIED OR USED WITHOUT THE APPROVAL OF MICRO SWITCH

SS41 DIGITAL BIPOLAR

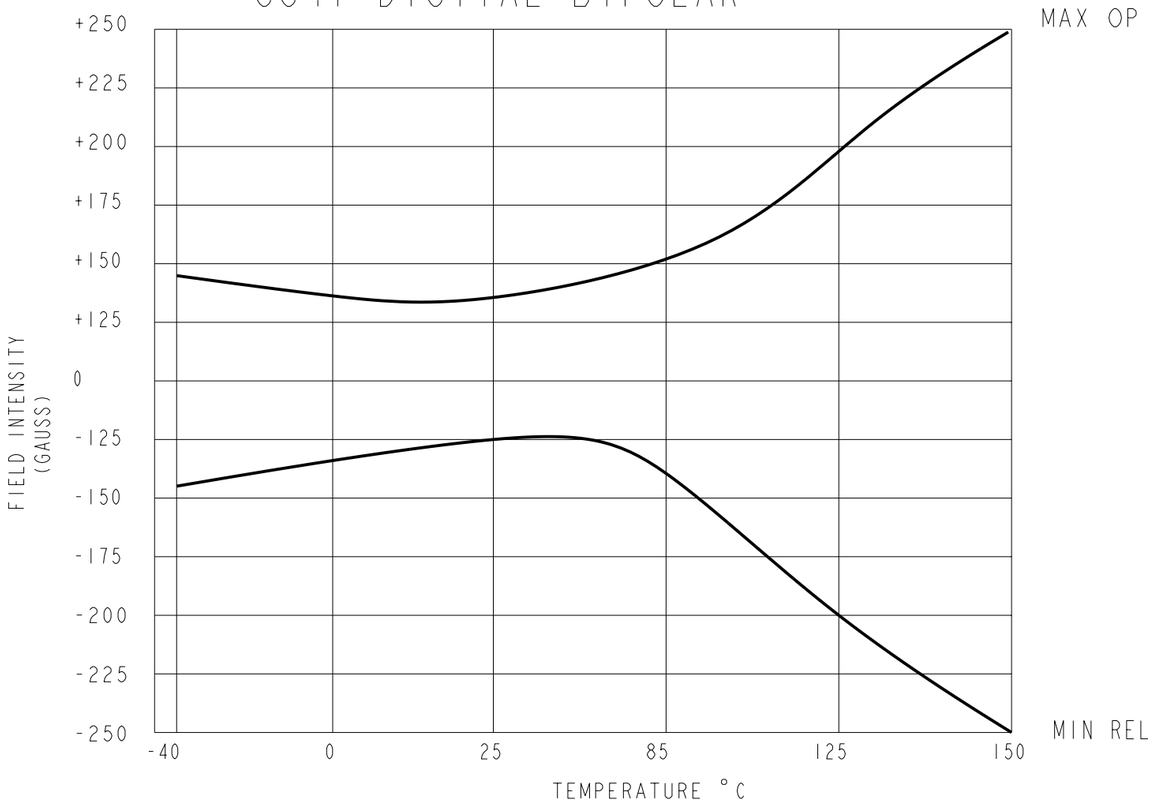

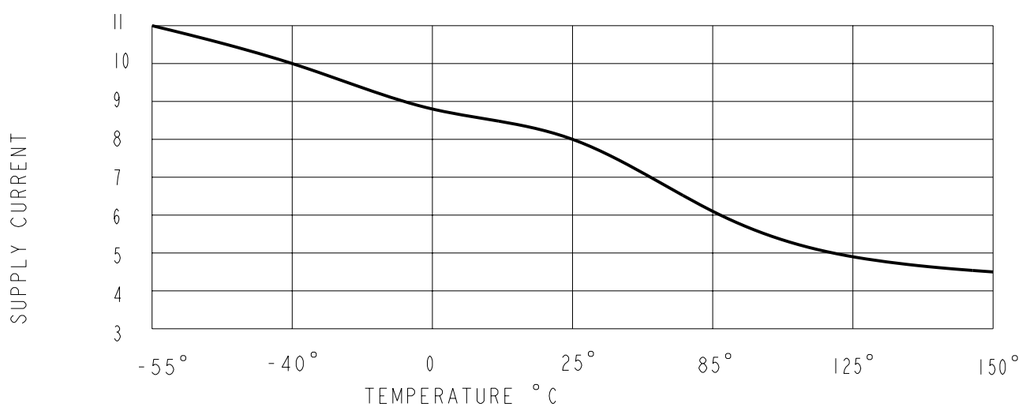

MAXIMUM SUPPLY CURRENT VS TEMPERATURE (OFF)

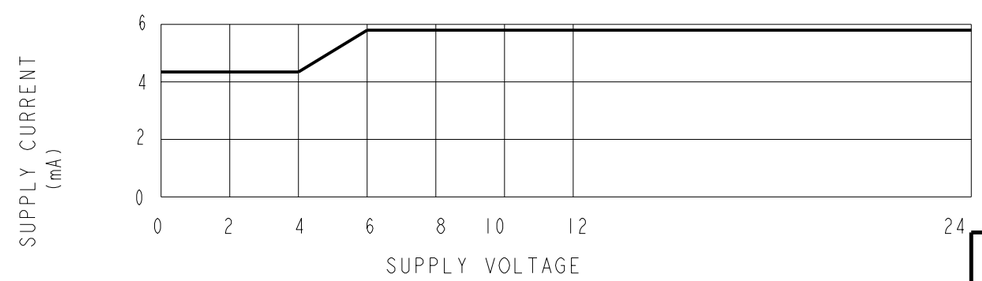

TYPICAL SUPPLY CURRENT (DEVICE OFF) AT 25°C

THIRD ANGLE PROJECTION

SCALE NONE

DO NOT SCALE PRINT

UNLESS OTHERWISE SPECIFIED TOLERANCES ARE

ONE PLACE	(.0)	±.030
TWO PLACE	(.00)	±.015
THREE PLACE	(.000)	±.005
ANGLES		±

WEIGHT

ANSI Y14.5M-1982 APPLIES

CATALOG LISTING SS40 SERIES CHART 1
PAGE 4 OF 4
RELEASE NO. CO-75147B
REPLACES -
ISSUE 16

REVISIONS

A	CO93816	KED 18JAN99
B	CO94110	TSM 18AUG99
C	205183	GLH 26MAR02
D	206240	TSM 28AUG02
E	206425	JLH 11SEP02

CHECK		
CHECK		
18JAN99		
JAF		
CHECK		
18JAN99		
DRAWN	KED	

PTC/CAD 3D

Компания «ЭлектроПласт» предлагает заключение долгосрочных отношений при поставках импортных электронных компонентов на взаимовыгодных условиях!

Наши преимущества:

- Оперативные поставки широкого спектра электронных компонентов отечественного и импортного производства напрямую от производителей и с крупнейших мировых складов;
- Поставка более 17-ти миллионов наименований электронных компонентов;
- Поставка сложных, дефицитных, либо снятых с производства позиций;
- Оперативные сроки поставки под заказ (от 5 рабочих дней);
- Экспресс доставка в любую точку России;
- Техническая поддержка проекта, помощь в подборе аналогов, поставка прототипов;
- Система менеджмента качества сертифицирована по Международному стандарту ISO 9001;
- Лицензия ФСБ на осуществление работ с использованием сведений, составляющих государственную тайну;
- Поставка специализированных компонентов (Xilinx, Altera, Analog Devices, Intersil, Interpoint, Microsemi, Aeroflex, Peregrine, Syfer, Eurofarad, Texas Instrument, Miteq, Cobham, E2V, MA-COM, Hittite, Mini-Circuits,General Dynamics и др.);

Помимо этого, одним из направлений компании «ЭлектроПласт» является направление «Источники питания». Мы предлагаем Вам помощь Конструкторского отдела:

- Подбор оптимального решения, техническое обоснование при выборе компонента;
- Подбор аналогов;
- Консультации по применению компонента;
- Поставка образцов и прототипов;
- Техническая поддержка проекта;
- Защита от снятия компонента с производства.

Как с нами связаться

Телефон: 8 (812) 309 58 32 (многоканальный)
Факс: 8 (812) 320-02-42
Электронная почта: org@eplast1.ru
Адрес: 198099, г. Санкт-Петербург, ул. Калинина, дом 2, корпус 4, литера А.