74LVC4245A

Octal dual supply translating transceiver; 3-state

Rev. 10 — 18 December 2012 Product data sheet

1. General description

The 74LVC4245A is an octal dual supply translating transceiver featuring non-inverting 3-state bus compatible outputs in both send and receive directions. It is designed to interface between a 3 V and 5 V bus in a mixed 3 V and 5 V supply environment.

The device features an output enable input (pin $\overline{OE}$) for easy cascading and a send/receive input (pin DIR) for direction control. Pin $\overline{OE}$ controls the outputs so that the buses are effectively isolated.

In suspend mode, when $V_{CC(A)}$ is zero, there will be no current flow from one supply to the other supply. The A-outputs must be set 3-state and the voltage on the A-bus must be smaller than V_{diode} (typical 0.7 V).

$V_{CC(A)} \geq V_{CC(B)}$, except in suspend mode.

2. Features and benefits

- 5 V tolerant inputs/outputs, for interfacing with 5 V logic
- Wide supply voltage range:
  - 3 V bus ($V_{CC(B)}$): 1.5 V to 3.6 V
  - 5 V bus ($V_{CC(A)}$): 1.5 V to 5.5 V
- CMOS low-power consumption
- Direct interface with TTL levels
- Inputs accept voltages up to 5.5 V
- High-impedance when $V_{CC(A)}$ = 0 V
- Complies with JEDEC standard no. JESD8B/JESD36
- ESD protection:
  - HBM JESD22-A114F exceeds 2000 V
  - MM JESD22-A115-A exceeds 200 V
- Multiple package options
- Specified from –40 °C to +85 °C and –40 °C to +125 °C

3. Ordering information

Table 1. Ordering information

Type number	Package			
	Temperature range	Name	Description	Version
74LVC4245AD	–40 °C to +125 °C	SO24	plastic small outline package; 24 leads; body width 7.5 mm	SOT137-1
74LVC4245ADB	–40 °C to +125 °C	SSOP24	plastic shrink small outline package; 24 leads; body width 5.3 mm	SOT340-1
74LVC4245APW	–40 °C to +125 °C	TSSOP24	plastic thin shrink small outline package; 24 leads; body width 4.4 mm	SOT355-1
74LVC4245ABQ	–40 °C to +125 °C	DHVQFN24	plastic dual in-line compatible thermal enhanced very thin quad flat package; no leads; 24 terminals; body 3.5 × 5.5 × 0.85 mm	SOT815-1

4. Functional diagram

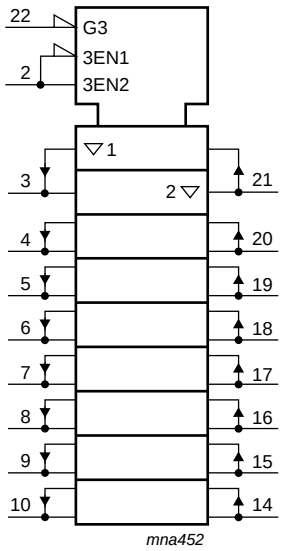

Fig 1. IEC Logic symbol

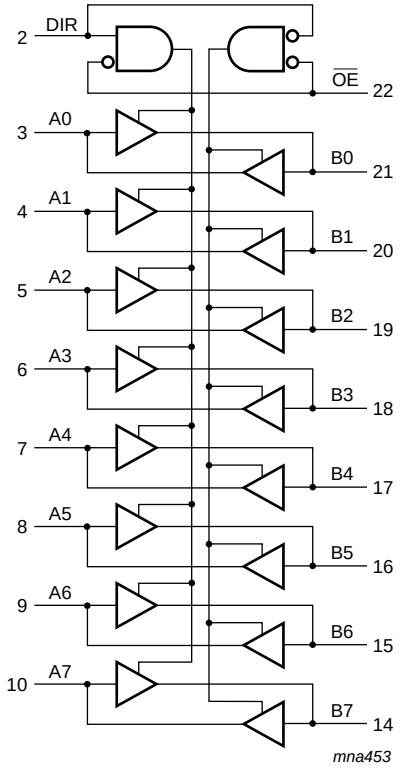

Fig 2. Logic diagram

All information provided in this document is subject to legal disclaimers.

© Nexperia B.V. 2017. All rights reserved

5. Pinning information

5.1 Pinning

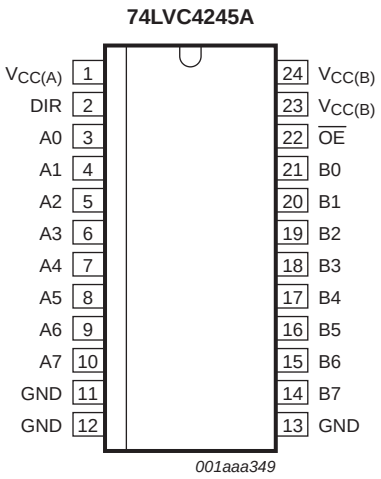

Fig 3. Pin configuration SO24 and (T)SSOP24

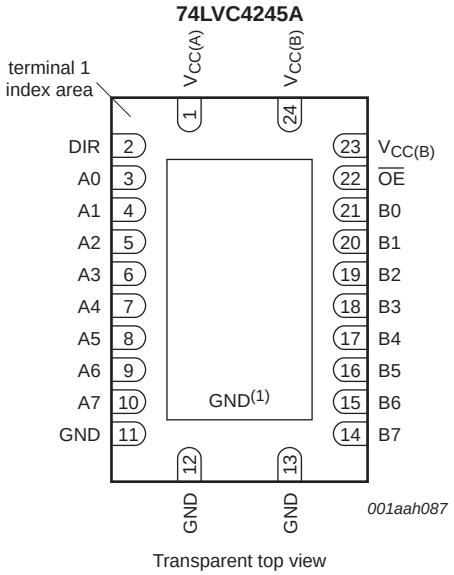

(1) This is not a supply pin. The substrate is attached to this pad using conductive die attach material. There is no electrical or mechanical requirement to solder this pad. However, if it is soldered, the solder land should remain floating or be connected to GND.

Fig 4. Pin configuration DHVQFN24

5.2 Pin description

Table 2. Pin description

Symbol	Pin	Description
$V_{CC(A)}$	1	supply voltage (5 V bus)
$V_{CC(B)}$	23, 24	supply voltage (3 V bus)
GND	11, 12, 13	ground (0 V)
DIR	2	direction control
A[0:7]	3, 4, 5, 6, 7, 8, 9, 10	data input or output
B[0:7]	21, 20, 19, 18, 17, 16, 15, 14	data input or output
$\overline{OE}$	22	output enable input (active LOW)

All information provided in this document is subject to legal disclaimers.

© Nexperia B.V. 2017. All rights reserved

6. Functional description

Table 3. Functional table[1]

Input		Input/output	
$\overline{OE}$	DIR	An	Bn
L	L	A = B	input
L	H	input	B = A
H	X	Z	Z

[1] H = HIGH voltage level; L = LOW voltage level; X = don't care; Z = high-impedance OFF-state.

7. Limiting values

Table 4. Limiting values

In accordance with the Absolute Maximum Rating System (IEC 60134). Voltages are referenced to GND (ground = 0 V).

Symbol	Parameter	Conditions		Min	Max	Unit
$V_{CC(A)}$	supply voltage A			–0.5	+6.5	V
$V_{CC(B)}$	supply voltage B			–0.5	+4.6	V
I_{IK}	input clamping current	$V_I < 0$ V		–50	-	mA
V_I	input voltage		[1]	–0.5	+6.5	V
I_{OK}	output clamping current	$V_O > V_{CCO}$ or $V_O < 0$ V	[3]	-	±50	mA
V_O	output voltage	output HIGH or LOW state	[1]	–0.5	V_{CC} + 0.5	V
		output 3-state	[1]	–0.5	+6.5	V
I_O	output current	V_O = 0 V to V_{CCO}	[3]	-	±50	mA
I_{CC}	supply current			-	100	mA
I_{GND}	ground current			–100	-	mA
T_{stg}	storage temperature			–65	+150	°C
P_{tot}	total power dissipation	T_{amb} = –40 °C to +125 °C	[2]	-	500	mW

[1] The input and output voltage ratings may be exceeded if the input and output current ratings are observed.

[2] For SO24 packages: above 70 °C the value of P_{tot} derates linearly with 8 mW/K.
For (T)SSOP24 packages: above 60 °C the value of P_{tot} derates linearly with 5.5 mW/K.
For DHVQFN24 packages: above 60 °C the value of P_{tot} derates linearly with 4.5 mW/K.

[3] V_{CCO} is the supply voltage associated with the output.

8. Recommended operating conditions

Table 5. Recommended operating conditions

Symbol	Parameter	Conditions	Min	Typ	Max	Unit
$V_{CC(A)}$	supply voltage A	$V_{CC(A)} \geq V_{CC(B)}$; see Figure 5 for maximum speed performance	1.5	-	5.5	V
$V_{CC(B)}$	supply voltage B	$V_{CC(A)} \geq V_{CC(B)}$; see Figure 5 for low-voltage applications	1.5	-	3.6	V
V_I	input voltage	for control inputs	0	-	5.5	V

All information provided in this document is subject to legal disclaimers.

© Nexperia B.V. 2017. All rights reserved

Table 5. Recommended operating conditions *...continued*

Symbol	Parameter	Conditions	Min	Typ	Max	Unit
V_O	output voltage	output HIGH or LOW state	0	-	V_{CC}	V
		output 3-state	0	-	5.5	V
T_{amb}	ambient temperature		–40	-	+125	°C
$\Delta t/\Delta V$	input transition rise and fall rate	$V_{CC(B)}$ = 2.7 V to 3.0 V	-	-	20	ns/V
		$V_{CC(B)}$ = 3.0 V to 3.6 V	-	-	10	ns/V
		$V_{CC(A)}$ = 3.0 V to 4.5 V	-	-	20	ns/V
		$V_{CC(A)}$ = 4.5 V to 5.5 V	-	-	10	ns/V

9. Static characteristics

Table 6. Static characteristics

At recommended operating conditions; voltages are referenced to GND (ground = 0 V).

Symbol	Parameter	Conditions	Min	Typ[1]	Max	Unit
T_{amb} = –40 °C to +85 °C						
V_{IH}	HIGH-level input voltage	$V_{CC(B)}$ = 2.7 V to 3.6 V	2.0	-	-	V
		$V_{CC(A)}$ = 4.5 V to 5.5 V	2.0	-	-	V
V_{IL}	LOW-level input voltage	$V_{CC(B)}$ = 2.7 V to 3.6 V	-	-	0.8	V
		$V_{CC(A)}$ = 4.5 V to 5.5 V	-	-	0.8	V
V_{OH}	HIGH-level output voltage	$V_I = V_{IH}$ or V_{IL}				
		$V_{CC(B)}$ = 2.7 V to 3.6 V; I_O = –100 μA	$V_{CC(B)}$ – 0.2	$V_{CC(B)}$	-	V
		$V_{CC(B)}$ = 2.7 V; I_O = –12 mA	$V_{CC(B)}$ – 0.5	-	-	V
		$V_{CC(B)}$ = 3.0 V; I_O = –24 mA	$V_{CC(B)}$ – 0.8	-	-	V
		$V_{CC(A)}$ = 4.5 V to 5.5 V; I_O = –100 μA	$V_{CC(A)}$ – 0.2	$V_{CC(A)}$	-	V
		$V_{CC(A)}$ = 4.5 V; I_O = –12 mA	$V_{CC(A)}$ – 0.5	-	-	V
		$V_{CC(A)}$ = 4.5 V; I_O = –24 mA	$V_{CC(A)}$ – 0.8	-	-	V
V_{OL}	LOW-level output voltage	$V_I = V_{IH}$ or V_{IL}				
		$V_{CC(B)}$ = 2.7 V to 3.6 V; I_O = 100 μA	-	-	0.20	V
		$V_{CC(B)}$ = 2.7 V; I_O = 12 mA	-	-	0.40	V
		$V_{CC(B)}$ = 3.0 V; I_O = 24 mA	-	-	0.55	V
		$V_{CC(A)}$ = 4.5 V to 5.5 V; I_O = 100 μA	-	-	0.20	V
		$V_{CC(A)}$ = 4.5 V; I_O = 12 mA	-	-	0.40	V
		$V_{CC(A)}$ = 4.5 V; I_O = 24 mA	-	-	0.55	V
I_I	input leakage current	V_I = 5.5 V or GND	-	±0.1	±5	μA
I_{OZ}	OFF-state output current	$V_I = V_{IH}$ or V_{IL}	[2]			
		$V_{CC(B)}$ = 3.6 V; $V_O = V_{CC(B)}$ or GND	-	±0.1	±5	μA
		$V_{CC(A)}$ = 5.5 V; $V_O = V_{CC(A)}$ or GND	-	±0.1	±5	μA
I_{CC}	supply current	I_O = 0 A				
		$V_{CC(B)}$ = 3.6 V; other inputs at $V_{CC(B)}$ or GND	-	0.1	10	μA
		$V_{CC(A)}$ = 5.5 V; other inputs at $V_{CC(A)}$ or GND	-	0.1	10	μA

All information provided in this document is subject to legal disclaimers.

© Nexperia B.V. 2017. All rights reserved

Table 6. Static characteristics *...continued*

At recommended operating conditions; voltages are referenced to GND (ground = 0 V).

Symbol	Parameter	Conditions		Min	Typ[1]	Max	Unit
ΔI_{CC}	additional supply current	per control pin; I_O = 0 A	[3]				
		$V_{CC(B)}$ = 2.7 V to 3.6 V; $V_I = V_{CC(B)} - 0.6$ V; other inputs at $V_{CC(B)}$ or GND		-	5	500	μA
		$V_{CC(A)}$ = 4.5 V to 5.5 V; $V_I = V_{CC(A)} - 0.6$ V; other inputs at $V_{CC(A)}$ or GND		-	5	500	μA
C_I	input capacitance			-	4.0	-	pF
$C_{I/O}$	input/output capacitance	An and Bn		-	5.0	-	pF
T_{amb} = –40 °C to +125 °C							
V_{IH}	HIGH-level input voltage	$V_{CC(B)}$ = 2.7 V to 3.6 V		2.0	-	-	V
		$V_{CC(A)}$ = 4.5 V to 5.5 V		2.0	-	-	V
V_{IL}	LOW-level input voltage	$V_{CC(B)}$ = 2.7 V to 3.6 V		-	-	0.8	V
		$V_{CC(A)}$ = 4.5 V to 5.5 V		-	-	0.8	V
V_{OH}	HIGH-level output voltage	$V_I = V_{IH}$ or V_{IL}					
		$V_{CC(B)}$ = 2.7 V to 3.6 V; I_O = –100 μA		$V_{CC(B)} - 0.3$	-	-	V
		$V_{CC(B)}$ = 2.7 V; I_O = –12 mA		$V_{CC(B)} - 0.65$	-	-	V
		$V_{CC(B)}$ = 3.0 V; I_O = –24 mA		$V_{CC(B)} - 1.0$	-	-	V
		$V_{CC(A)}$ = 4.5 V to 5.5 V; I_O = –100 μA		$V_{CC(A)} - 0.3$	-	-	V
		$V_{CC(A)}$ = 4.5 V; I_O = –12 mA		$V_{CC(A)} - 0.65$	-	-	V
		$V_{CC(A)}$ = 4.5 V; I_O = –24 mA		$V_{CC(A)} - 1.0$	-	-	V
V_{OL}	LOW-level output voltage	$V_I = V_{IH}$ or V_{IL}					
		$V_{CC(B)}$ = 2.7 V to 3.6 V; I_O = 100 μA		-	-	0.30	V
		$V_{CC(B)}$ = 2.7 V; I_O = 12 mA		-	-	0.60	V
		$V_{CC(B)}$ = 3.0 V; I_O = 24 mA		-	-	0.80	V
		$V_{CC(A)}$ = 4.5 V to 5.5 V; I_O = 100 μA		-	-	0.30	V
		$V_{CC(A)}$ = 4.5 V; I_O = 12 mA		-	-	0.60	V
		$V_{CC(A)}$ = 4.5 V; I_O = 24 mA		-	-	0.80	V
I_I	input leakage current	V_I = 5.5 V or GND		-	-	±20	μA
I_{OZ}	OFF-state output current	$V_I = V_{IH}$ or V_{IL}	[2]				
		$V_{CC(B)}$ = 3.6 V; $V_O = V_{CC(B)}$ or GND		-	-	±20	μA
		$V_{CC(A)}$ = 5.5 V; $V_O = V_{CC(A)}$ or GND		-	-	±20	μA
I_{CC}	supply current	I_O = 0 A					
		$V_{CC(B)}$ = 3.6 V; other inputs at $V_{CC(B)}$ or GND		-	-	40	μA
		$V_{CC(A)}$ = 5.5 V; other inputs at $V_{CC(A)}$ or GND		-	-	40	μA

All information provided in this document is subject to legal disclaimers.

© Nexperia B.V. 2017. All rights reserved

Table 6. Static characteristics *...continued*

At recommended operating conditions; voltages are referenced to GND (ground = 0 V).

Symbol	Parameter	Conditions		Min	Typ[1]	Max	Unit
ΔI_{CC}	additional supply current	per control pin; I_O = 0 A	[3]				
		$V_{CC(B)}$ = 2.7 V to 3.6 V; $V_I = V_{CC(B)} - 0.6$ V; other inputs at $V_{CC(B)}$ or GND		-	-	5000	μA
		$V_{CC(A)}$ = 4.5 V to 5.5 V; $V_I = V_{CC(A)} - 0.6$ V; other inputs at $V_{CC(A)}$ or GND		-	-	5000	μA

[1] All typical values are measured at $V_{CC(A)}$ = 5.0 V, $V_{CC(B)}$ = 3.3 V and T_{amb} = 25 °C.

[2] For transceivers, the parameter I_{OZ} includes the input leakage current.

[3] $V_{CC(B)}$ = 2.7 V to 3.6 V: other inputs at $V_{CC(B)}$ or GND.
$V_{CC(A)}$ = 4.5 V to 5.5 V: other inputs at $V_{CC(A)}$ or GND.

10. Dynamic characteristics

Table 7. Dynamic characteristics

Voltages are referenced to GND (ground = 0 V). $V_{CC(A)}$ = 4.5 V to 5.5 V; $t_r = t_f \leq 2.5$ ns. For test circuit see Figure 8.

Symbol	Parameter	Conditions	$V_{CC(B)}$	–40 °C to +85 °C			–40 °C to +125 °C		Unit
				Min	Typ[1]	Max	Min	Max	
t_{PHL}	HIGH to LOW propagation delay	An to Bn; see Figure 6	2.7 V	1.0	3.6	6.3	1.0	8.0	ns
			3.0 V to 3.6 V	1.0	3.3	6.3	1.0	8.0	ns
		Bn to An; see Figure 6	2.7 V	1.0	3.4	6.1	1.0	8.0	ns
			3.0 V to 3.6 V	1.0	3.4	6.1	1.0	8.0	ns
t_{PLH}	LOW to HIGH propagation delay	An to Bn; see Figure 6	2.7 V	1.0	3.3	6.7	1.0	8.5	ns
			3.0 V to 3.6 V	1.0	2.8	6.5	1.0	8.5	ns
		Bn to An; see Figure 6	2.7 V	1.0	3.0	5.0	1.0	6.5	ns
			3.0 V to 3.6 V	1.0	3.0	5.0	1.0	6.5	ns
t_{PZL}	OFF-state to LOW propagation delay	$\overline{OE}$ to An; see Figure 7	2.7 V	1.0	4.5	9.0	1.0	11.5	ns
			3.0 V to 3.6 V	1.0	4.5	9.0	1.0	11.5	ns
		$\overline{OE}$ to Bn; see Figure 7	2.7 V	1.0	4.4	8.7	1.0	11.0	ns
			3.0 V to 3.6 V	1.0	3.8	8.1	1.0	10.5	ns
t_{PZH}	OFF-state to HIGH propagation delay	$\overline{OE}$ to An; see Figure 7	2.7 V	1.0	4.5	8.1	1.0	10.5	ns
			3.0 V to 3.6 V	1.0	4.5	8.1	1.0	10.5	ns
		$\overline{OE}$ to Bn; see Figure 7	2.7 V	1.0	4.3	8.7	1.0	11.0	ns
			3.0 V to 3.6 V	1.0	3.2	8.1	1.0	10.5	ns
t_{PLZ}	LOW to OFF-state propagation delay	$\overline{OE}$ to An; see Figure 7	2.7 V	1.0	2.9	7.0	1.0	9.0	ns
			3.0 V to 3.6 V	1.0	2.9	7.0	1.0	9.0	ns
		$\overline{OE}$ to Bn; see Figure 7	2.7 V	1.0	3.9	7.7	1.0	10.0	ns
			3.0 V to 3.6 V	1.0	3.5	7.7	1.0	10.0	ns
t_{PHZ}	HIGH to OFF-state propagation delay	$\overline{OE}$ to An; see Figure 7	2.7 V	1.0	2.8	5.8	1.0	7.5	ns
			3.0 V to 3.6 V	1.0	2.8	5.8	1.0	7.5	ns
		$\overline{OE}$ to Bn; see Figure 7	2.7 V	1.0	3.3	7.8	1.0	10.0	ns
			3.0 V to 3.6 V	1.0	2.9	7.8	1.0	10.0	ns

All information provided in this document is subject to legal disclaimers.

© Nexperia B.V. 2017. All rights reserved

Table 7. Dynamic characteristics *...continued*

Voltages are referenced to GND (ground = 0 V). $V_{CC(A)}$ = 4.5 V to 5.5 V; $t_r = t_f \leq 2.5$ ns. For test circuit see Figure 8.

Symbol	Parameter	Conditions	$V_{CC(B)}$		–40 °C to +85 °C			–40 °C to +125 °C		Unit
					Min	Typ[1]	Max	Min	Max	
$t_{sk(o)}$	output skew time			[2]	-	-	1.0	-	1.5	ns
C_{PD}	power dissipation capacitance	5 V bus: Bn to An; V_I = GND to $V_{CC(A)}$; $V_{CC(A)}$ = 5.0 V		[3]						
		outputs enabled	-		-	17	-	-	-	pF
		outputs disabled	-		-	5	-	-	-	pF
		3 V bus: An to Bn; V_I = GND to $V_{CC(B)}$; $V_{CC(B)}$ = 3.3 V		[3]						
		outputs enabled	-		-	17	-	-	-	pF
		outputs disabled	-		-	5	-	-	-	pF

[1] Typical values are measured at T_{amb} = 25 °C, $V_{CC(A)}$ = 5.0 V, and $V_{CC(B)}$ = 2.7 V and 3.3 V respectively.

[2] Skew between any two outputs of the same package switching in the same direction. This parameter is guaranteed by design.

[3] C_{PD} is used to determine the dynamic power dissipation (P_D in μW).

$P_D = C_{PD} \times V_{CC}^2 \times f_i \times N + \Sigma(C_L \times V_{CC}^2 \times f_o)$ where:

f_i = input frequency in MHz; f_o = output frequency in MHz

C_L = output load capacitance in pF

V_{CC} = supply voltage in Volts

N = number of inputs switching

$\Sigma(C_L \times V_{CC}^2 \times f_o)$ = sum of the outputs

11. AC waveforms

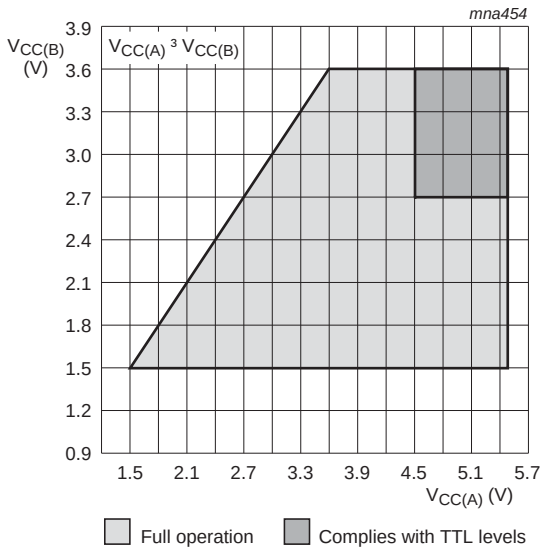

Fig 5. Supply operation area

All information provided in this document is subject to legal disclaimers.

© Nexperia B.V. 2017. All rights reserved

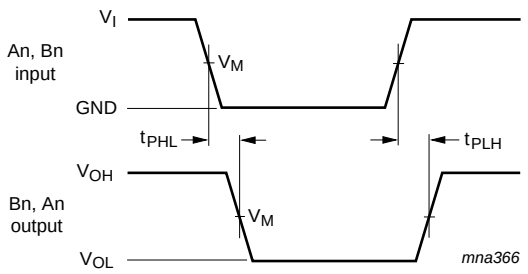

V_M = 1.5 V at 2.7 V ≤ $V_{CC(B)}$ ≤ 3.6 V;

V_M = 0.5 $V_{CC(A)}$ at $V_{CC(A)}$ ≥ 4.5 V.

V_{OL} and V_{OH} are typical output voltage drops that occur with the output load.

Fig 6. Input (An, Bn) to output (Bn, An) propagation delays

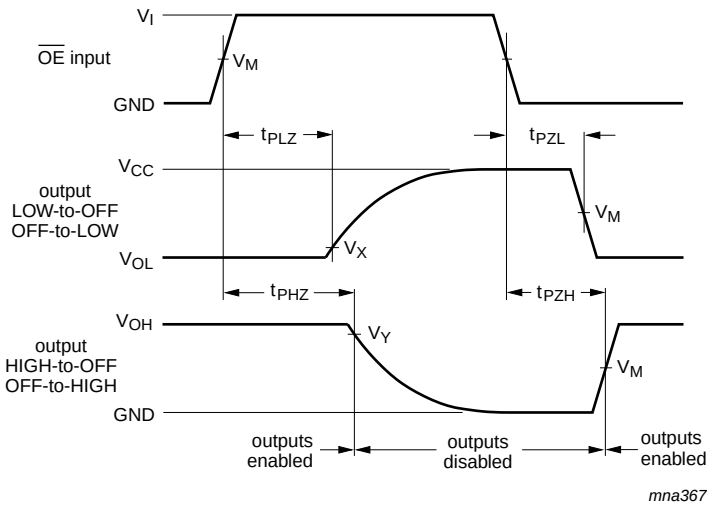

V_M = 1.5 V at 2.7 V ≤ $V_{CC(B)}$ ≤ 3.6 V;

V_M = 0.5 $V_{CC(A)}$) at $V_{CC(A)}$ ≥ 4.5 V.

V_X = V_{OL} + 0.3 V at $V_{CC(B)}$ ≥ 2.7 V;

V_Y = V_{OH} − 0.3 V at $V_{CC(B)}$ ≥ 2.7 V.

V_{OL} and V_{OH} are typical output voltage drops that occur with the output load.

Fig 7. 3-state enable and disable times

All information provided in this document is subject to legal disclaimers.

© Nexperia B.V. 2017. All rights reserved

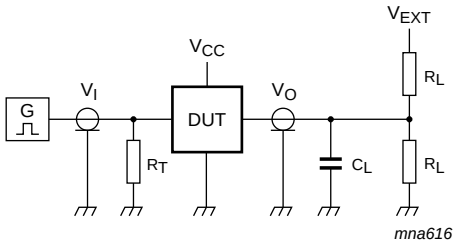

Test data is given in Table 8. Definitions for test circuit:

R_L = Load resistance.

C_L = Load capacitance including jig and probe capacitance.

R_T = Termination resistance should be equal to output impedance Z_o of the pulse generator.

Fig 8. Load circuitry for switching times

Table 8. Test data

Supply voltage		Input	Load		V_{EXT}		
$V_{CC(A)}$	$V_{CC(B)}$	V_I [1]	C_L	R_L	t_{PLH}, t_{PHL}	t_{PZH}, t_{PHZ}	t_{PZL}, t_{PLZ} [2]
< 2.7 V	< 2.7 V	V_{CCI}	50 pF	500 Ω	open	GND	$2 \times V_{CCO}$
-	2.7 V to 3.6 V	2.7 V	50 pF	500 Ω	open	GND	$2 \times V_{CCO}$
4.5 V to 5.5 V	-	3.0 V	50 pF	500 Ω	open	GND	$2 \times V_{CCO}$

[1] V_{CCI} is the supply voltage associated with the data input port.

[2] V_{CCO} is the supply voltage associated with the output port.

All information provided in this document is subject to legal disclaimers.

© Nexperia B.V. 2017. All rights reserved

12. Package outline

SO24: plastic small outline package; 24 leads; body width 7.5 mm **SOT137-1**

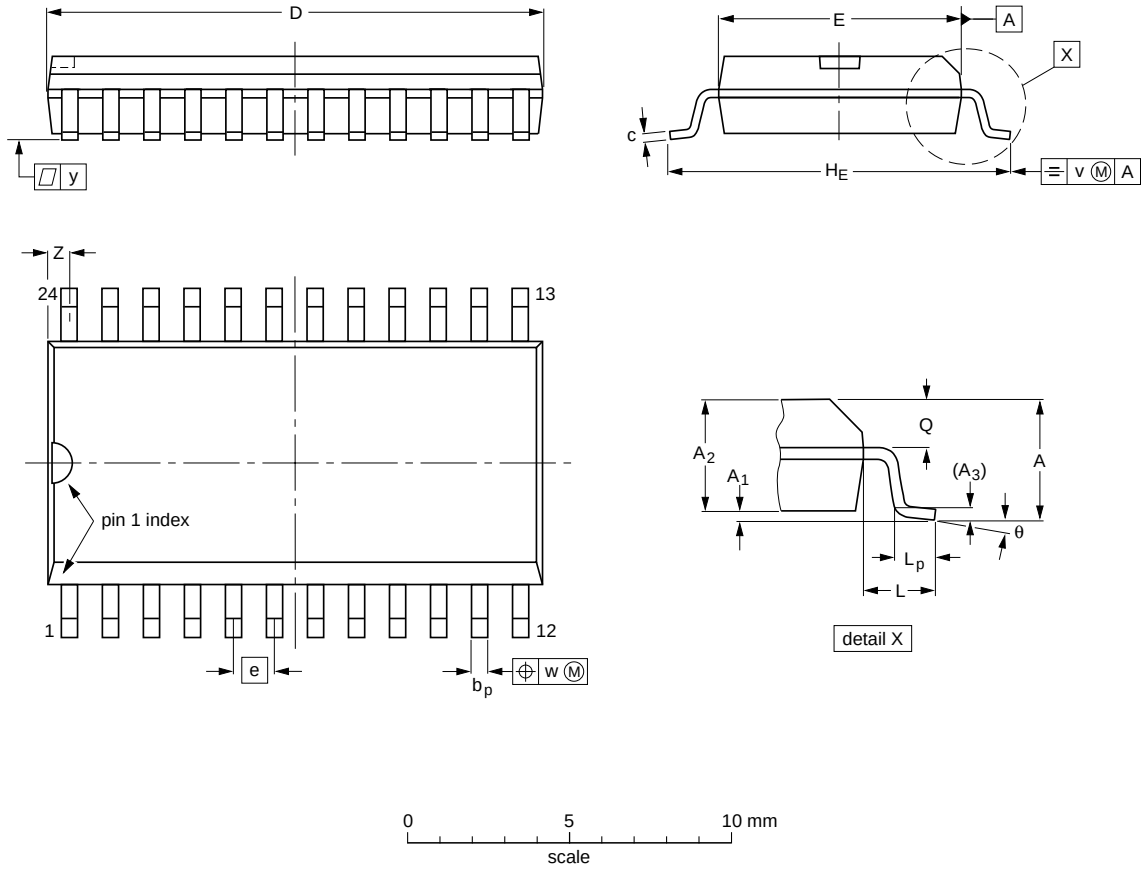

DIMENSIONS (inch dimensions are derived from the original mm dimensions)

UNIT	A max.	A_1	A_2	A_3	b_p	c	D (1)	E (1)	e	H_E	L	L_p	Q	v	w	y	Z (1)	θ
mm	2.65	0.3 0.1	2.45 2.25	0.25	0.49 0.36	0.32 0.23	15.6 15.2	7.6 7.4	1.27	10.65 10.00	1.4	1.1 0.4	1.1 1.0	0.25	0.25	0.1	0.9 0.4	8° 0°
inches	0.1	0.012 0.004	0.096 0.089	0.01	0.019 0.014	0.013 0.009	0.61 0.60	0.30 0.29	0.05	0.419 0.394	0.055	0.043 0.016	0.043 0.039	0.01	0.01	0.004	0.035 0.016	

Note

1. Plastic or metal protrusions of 0.15 mm (0.006 inch) maximum per side are not included.

OUTLINE VERSION	REFERENCES				EUROPEAN PROJECTION	ISSUE DATE
	IEC	JEDEC	JEITA			
SOT137-1	075E05	MS-013				~~99-12-27~~ 03-02-19

Fig 9. Package outline SOT137-1 (SO24)

All information provided in this document is subject to legal disclaimers.

© Nexperia B.V. 2017. All rights reserved

SSOP24: plastic shrink small outline package; 24 leads; body width 5.3 mm **SOT340-1**

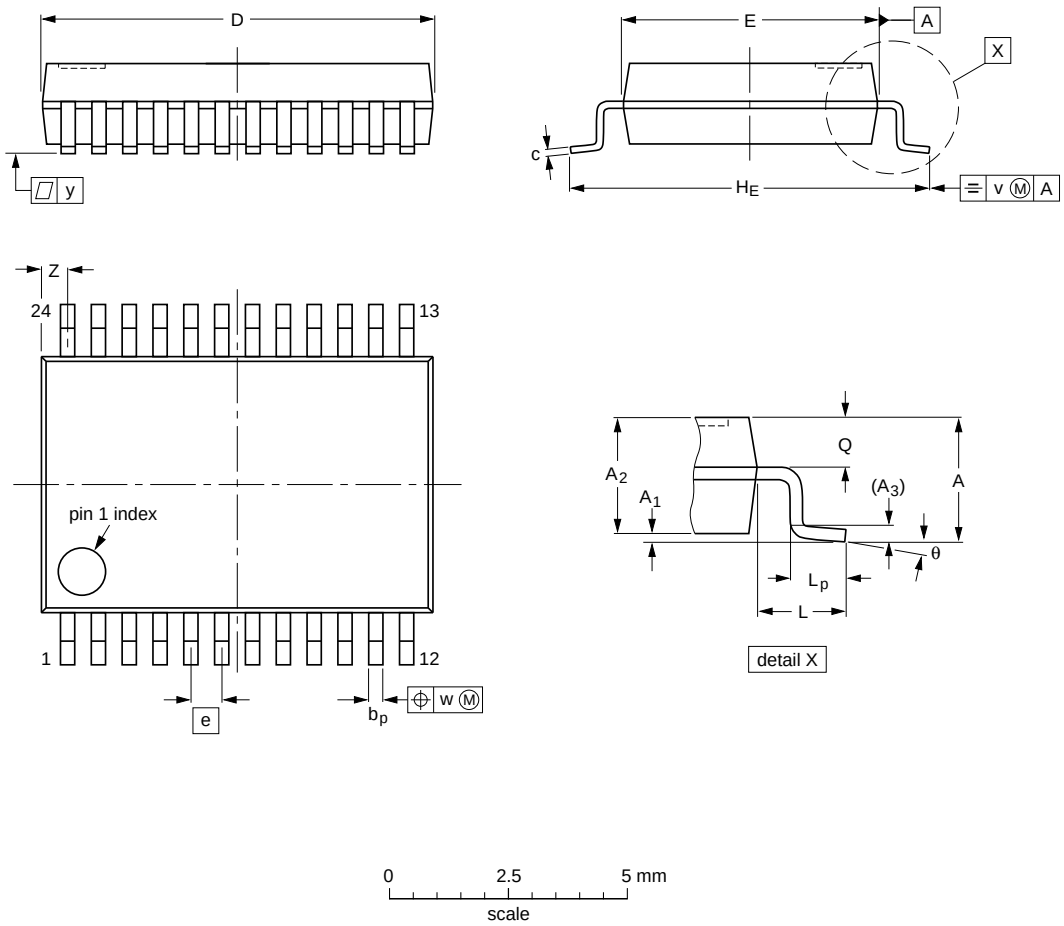

DIMENSIONS (mm are the original dimensions)

UNIT	A max.	A_1	A_2	A_3	b_p	c	D(1)	E(1)	e	H_E	L	L_p	Q	v	w	y	Z(1)	θ
mm	2	0.21 0.05	1.80 1.65	0.25	0.38 0.25	0.20 0.09	8.4 8.0	5.4 5.2	0.65	7.9 7.6	1.25	1.03 0.63	0.9 0.7	0.2	0.13	0.1	0.8 0.4	8° 0°

Note

1. Plastic or metal protrusions of 0.2 mm maximum per side are not included.

OUTLINE VERSION	REFERENCES				EUROPEAN PROJECTION	ISSUE DATE
	IEC	JEDEC	JEITA			
SOT340-1		MO-150				~~99-12-27~~ 03-02-19

Fig 10. Package outline SOT340-1 (SSOP24)

All information provided in this document is subject to legal disclaimers.

© Nexperia B.V. 2017. All rights reserved

TSSOP24: plastic thin shrink small outline package; 24 leads; body width 4.4 mm **SOT355-1**

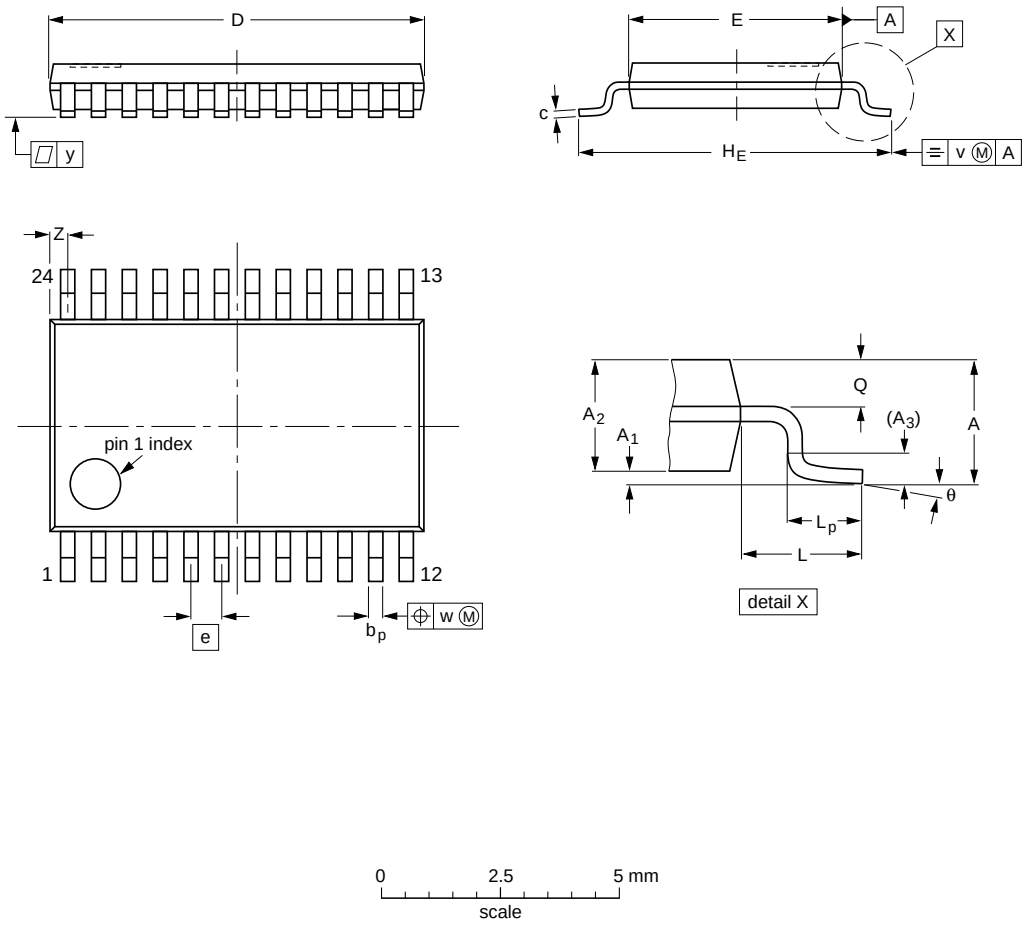

DIMENSIONS (mm are the original dimensions)

UNIT	A max.	A_1	A_2	A_3	b_p	c	D(1)	E(2)	e	H_E	L	L_p	Q	v	w	y	Z(1)	θ
mm	1.1	0.15 0.05	0.95 0.80	0.25	0.30 0.19	0.2 0.1	7.9 7.7	4.5 4.3	0.65	6.6 6.2	1	0.75 0.50	0.4 0.3	0.2	0.13	0.1	0.5 0.2	8° 0°

Notes

1. Plastic or metal protrusions of 0.15 mm maximum per side are not included.
2. Plastic interlead protrusions of 0.25 mm maximum per side are not included.

OUTLINE VERSION	REFERENCES				EUROPEAN PROJECTION	ISSUE DATE
	IEC	JEDEC	JEITA			
SOT355-1		MO-153				~~99-12-27~~ 03-02-19

Fig 11. Package outline SOT355-1 (TSSOP24)

All information provided in this document is subject to legal disclaimers.

© Nexperia B.V. 2017. All rights reserved

DHVQFN24: plastic dual in-line compatible thermal enhanced very thin quad flat package; no leads; 24 terminals; body 3.5 x 5.5 x 0.85 mm **SOT815-1**

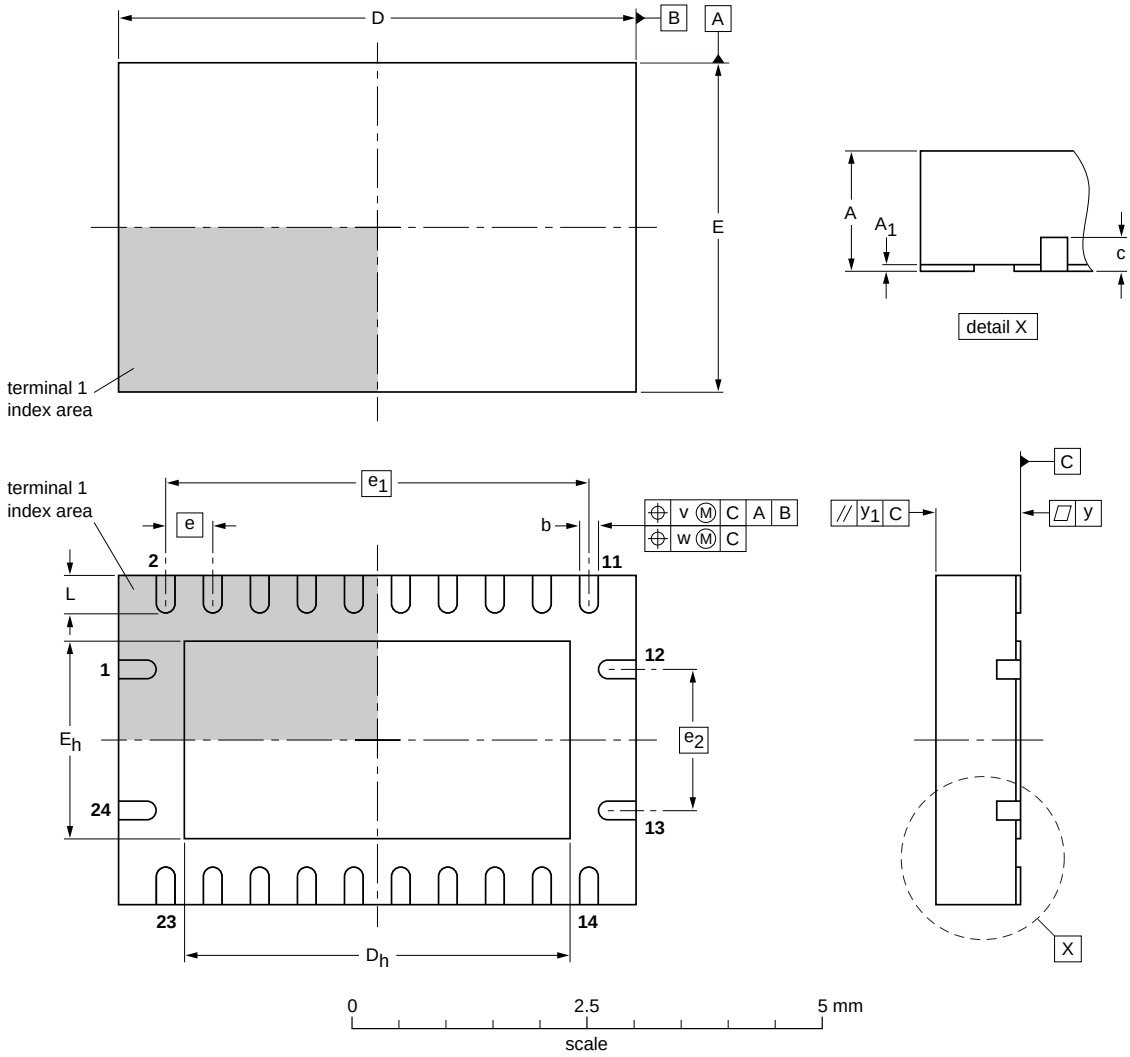

DIMENSIONS (mm are the original dimensions)

UNIT	A(1) max.	A_1	b	c	D(1)	D_h	E(1)	E_h	e	e_1	e_2	L	v	w	y	y_1
mm	1	0.05 0.00	0.30 0.18	0.2	5.6 5.4	4.25 3.95	3.6 3.4	2.25 1.95	0.5	4.5	1.5	0.5 0.3	0.1	0.05	0.05	0.1

Note

1. Plastic or metal protrusions of 0.075 mm maximum per side are not included.

OUTLINE VERSION	REFERENCES				EUROPEAN PROJECTION	ISSUE DATE
	IEC	JEDEC	JEITA			
SOT815-1	- - -	- - -	- - -			03-04-29

Fig 12. Package outline SOT815-1 (DHVQFN24)

All information provided in this document is subject to legal disclaimers.

© Nexperia B.V. 2017. All rights reserved

13. Abbreviations

Table 9. Abbreviations

Acronym	Description
ESD	ElectroStatic Discharge
HBM	Human Body Model
MM	Machine Model
TTL	Transistor-Transistor Logic

14. Revision history

Table 10. Revision history

Document ID	Release date	Data sheet status	Change notice	Supersedes
74LVC4245A v.10	20121218	Product data sheet	-	74LVC4245A v.9
Modifications:	• $V_{CC(A)}$) and $V_{CC(B)}$) changed into $V_{CC(A)}$ and $V_{CC(B)}$ (errata)			
74LVC4245A v.9	20121120	Product data sheet	-	74LVC4245A v.8
Modifications:	• Figure 4: Pin configuration drawing corrected for DHVQFN24 package			
74LVC4245A v.8	20111122	Product data sheet	-	74LVC4245A v.7
74LVC4245A v.7	20110812	Product data sheet	-	74LVC4245A v.6
74LVC4245A v.6	20080118	Product data sheet	-	74LVC4245A v.5
74LVC4245A v.5	20040330	Product specification	-	74LVC4245A v.4
74LVC4245A v.4	20040211	Product specification	-	74LVC4245A v.3
74LVC4245A v.3	19990615	Product specification	-	74LVC4245A v.2
74LVC4245A v.2	19980729	Product specification	-	74LVC4245A v.1
74LVC4245A v.1	19980729	Product specification	-	-

All information provided in this document is subject to legal disclaimers.

© Nexperia B.V. 2017. All rights reserved

15. Legal information

15.1 Data sheet status

Document status[1][2]	Product status[3]	Definition
Objective [short] data sheet	Development	This document contains data from the objective specification for product development.
Preliminary [short] data sheet	Qualification	This document contains data from the preliminary specification.
Product [short] data sheet	Production	This document contains the product specification.

[1] Please consult the most recently issued document before initiating or completing a design.

[2] The term 'short data sheet' is explained in section "Definitions".

[3] The product status of device(s) described in this document may have changed since this document was published and may differ in case of multiple devices. The latest product status information is available on the Internet at URL http://www.nexperia.com.

15.2 Definitions

Draft — The document is a draft version only. The content is still under internal review and subject to formal approval, which may result in modifications or additions. Nexperia does not give any representations or warranties as to the accuracy or completeness of information included herein and shall have no liability for the consequences of use of such information.

Short data sheet — A short data sheet is an extract from a full data sheet with the same product type number(s) and title. A short data sheet is intended for quick reference only and should not be relied upon to contain detailed and full information. For detailed and full information see the relevant full data sheet, which is available on request via the local Nexperia sales office. In case of any inconsistency or conflict with the short data sheet, the full data sheet shall prevail.

Product specification — The information and data provided in a Product data sheet shall define the specification of the product as agreed between Nexperia and its customer, unless Nexperia and customer have explicitly agreed otherwise in writing. In no event however, shall an agreement be valid in which the Nexperia product is deemed to offer functions and qualities beyond those described in the Product data sheet.

15.3 Disclaimers

Limited warranty and liability — Information in this document is believed to be accurate and reliable. However, Nexperia does not give any representations or warranties, expressed or implied, as to the accuracy or completeness of such information and shall have no liability for the consequences of use of such information. Nexperia takes no responsibility for the content in this document if provided by an information source outside of Nexperia.

In no event shall Nexperia be liable for any indirect, incidental, punitive, special or consequential damages (including - without limitation - lost profits, lost savings, business interruption, costs related to the removal or replacement of any products or rework charges) whether or not such damages are based on tort (including negligence), warranty, breach of contract or any other legal theory.

Notwithstanding any damages that customer might incur for any reason whatsoever, Nexperia's aggregate and cumulative liability towards customer for the products described herein shall be limited in accordance with the *Terms and conditions of commercial sale* of Nexperia.

Right to make changes — Nexperia reserves the right to make changes to information published in this document, including without limitation specifications and product descriptions, at any time and without notice. This document supersedes and replaces all information supplied prior to the publication hereof.

Suitability for use — Nexperia products are not designed, authorized or warranted to be suitable for use in life support, life-critical or safety-critical systems or equipment, nor in applications where failure or malfunction of a Nexperia product can reasonably be expected to result in personal injury, death or severe property or environmental damage. Nexperia and its suppliers accept no liability for inclusion and/or use of Nexperia products in such equipment or applications and therefore such inclusion and/or use is at the customer's own risk.

Applications — Applications that are described herein for any of these products are for illustrative purposes only. Nexperia makes no representation or warranty that such applications will be suitable for the specified use without further testing or modification.

Customers are responsible for the design and operation of their applications and products using Nexperia products, and Nexperia accepts no liability for any assistance with applications or customer product design. It is customer's sole responsibility to determine whether the Nexperia product is suitable and fit for the customer's applications and products planned, as well as for the planned application and use of customer's third party customer(s). Customers should provide appropriate design and operating safeguards to minimize the risks associated with their applications and products.

Nexperia does not accept any liability related to any default, damage, costs or problem which is based on any weakness or default in the customer's applications or products, or the application or use by customer's third party customer(s). Customer is responsible for doing all necessary testing for the customer's applications and products using Nexperia products in order to avoid a default of the applications and the products or of the application or use by customer's third party customer(s). Nexperia does not accept any liability in this respect.

Limiting values — Stress above one or more limiting values (as defined in the Absolute Maximum Ratings System of IEC 60134) will cause permanent damage to the device. Limiting values are stress ratings only and (proper) operation of the device at these or any other conditions above those given in the Recommended operating conditions section (if present) or the Characteristics sections of this document is not warranted. Constant or repeated exposure to limiting values will permanently and irreversibly affect the quality and reliability of the device.

Terms and conditions of commercial sale — Nexperia products are sold subject to the general terms and conditions of commercial sale, as published at http://www.nexperia.com/profile/terms, unless otherwise agreed in a valid written individual agreement. In case an individual agreement is concluded only the terms and conditions of the respective agreement shall apply. Nexperia hereby expressly objects to applying the customer's general terms and conditions with regard to the purchase of Nexperia products by customer.

No offer to sell or license — Nothing in this document may be interpreted or construed as an offer to sell products that is open for acceptance or the grant, conveyance or implication of any license under any copyrights, patents or other industrial or intellectual property rights.

All information provided in this document is subject to legal disclaimers.

© Nexperia B.V. 2017. All rights reserved

Export control — This document as well as the item(s) described herein may be subject to export control regulations. Export might require a prior authorization from competent authorities.

Non-automotive qualified products — Unless this data sheet expressly states that this specific Nexperia product is automotive qualified, the product is not suitable for automotive use. It is neither qualified nor tested in accordance with automotive testing or application requirements. Nexperia accepts no liability for inclusion and/or use of non-automotive qualified products in automotive equipment or applications.

In the event that customer uses the product for design-in and use in automotive applications to automotive specifications and standards, customer (a) shall use the product without Nexperia's warranty of the product for such automotive applications, use and specifications, and (b) whenever customer uses the product for automotive applications beyond Nexperia's specifications such use shall be solely at customer's own risk, and (c) customer fully indemnifies Nexperia for any liability, damages or failed product claims resulting from customer design and use of the product for automotive applications beyond Nexperia's standard warranty and Nexperia's product specifications.

Translations — A non-English (translated) version of a document is for reference only. The English version shall prevail in case of any discrepancy between the translated and English versions.

15.4 Trademarks

Notice: All referenced brands, product names, service names and trademarks are the property of their respective owners.

16. Contact information

For more information, please visit: **http://www.nexperia.com**

For sales office addresses, please send an email to: **salesaddresses@nexperia.com**

All information provided in this document is subject to legal disclaimers.

© Nexperia B.V. 2017. All rights reserved

17. Contents

1 General description 1
2 Features and benefits 1
3 Ordering information 2
4 Functional diagram 2
5 Pinning information 3
5.1 Pinning 3
5.2 Pin description 3
6 Functional description 4
7 Limiting values 4
8 Recommended operating conditions 4
9 Static characteristics 5
10 Dynamic characteristics 7
11 AC waveforms 8
12 Package outline 11
13 Abbreviations 15
14 Revision history 15
15 Legal information 16
15.1 Data sheet status 16
15.2 Definitions 16
15.3 Disclaimers 16
15.4 Trademarks 17
16 Contact information 17
17 Contents 18

© Nexperia B.V. 2017. All rights reserved

For more information, please visit: http://www.nexperia.com
For sales office addresses, please send an email to: salesaddresses@nexperia.com
Date of release: 18 December 2012

Компания «ЭлектроПласт» предлагает заключение долгосрочных отношений при поставках импортных электронных компонентов на взаимовыгодных условиях!

Наши преимущества:

- Оперативные поставки широкого спектра электронных компонентов отечественного и импортного производства напрямую от производителей и с крупнейших мировых складов;
- Поставка более 17-ти миллионов наименований электронных компонентов;
- Поставка сложных, дефицитных, либо снятых с производства позиций;
- Оперативные сроки поставки под заказ (от 5 рабочих дней);
- Экспресс доставка в любую точку России;
- Техническая поддержка проекта, помощь в подборе аналогов, поставка прототипов;
- Система менеджмента качества сертифицирована по Международному стандарту ISO 9001;
- Лицензия ФСБ на осуществление работ с использованием сведений, составляющих государственную тайну;
- Поставка специализированных компонентов (Xilinx, Altera, Analog Devices, Intersil, Interpoint, Microsemi, Aeroflex, Peregrine, Syfer, Eurofarad, Texas Instrument, Miteq, Cobham, E2V, MA-COM, Hittite, Mini-Circuits,General Dynamics и др.);

Помимо этого, одним из направлений компании «ЭлектроПласт» является направление «Источники питания». Мы предлагаем Вам помощь Конструкторского отдела:

- Подбор оптимального решения, техническое обоснование при выборе компонента;
- Подбор аналогов;
- Консультации по применению компонента;
- Поставка образцов и прототипов;
- Техническая поддержка проекта;
- Защита от снятия компонента с производства.

Как с нами связаться

Телефон: 8 (812) 309 58 32 (многоканальный)
Факс: 8 (812) 320-02-42
Электронная почта: org@eplast1.ru
Адрес: 198099, г. Санкт-Петербург, ул. Калинина, дом 2, корпус 4, литера А.