THIS DRAWING IS UNPUBLISHED. RELEASED FOR PUBLICATION -,- .
© COPYRIGHT – TE Connectivity ALL RIGHTS RESERVED.

REVISIONS					
P	LTR	DESCRIPTION	DATE	DWN	APVD
	2	PRELIMINARY	09OCT2018	J.T	K.K

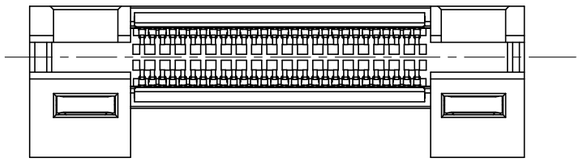

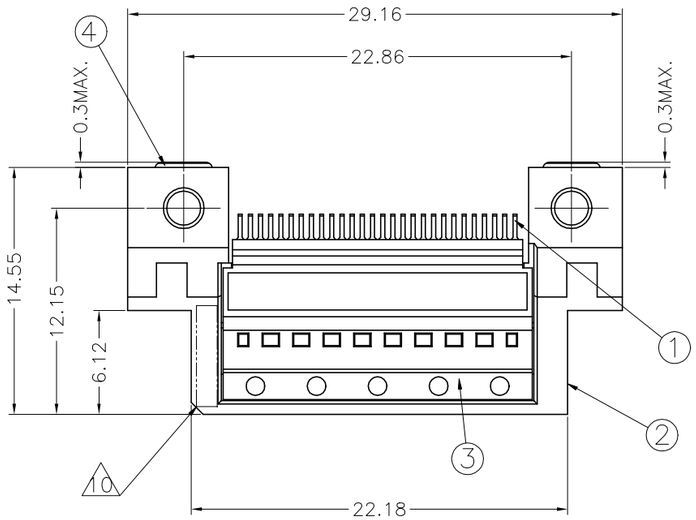

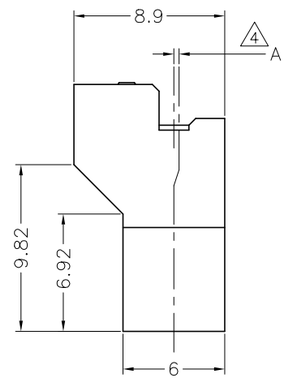

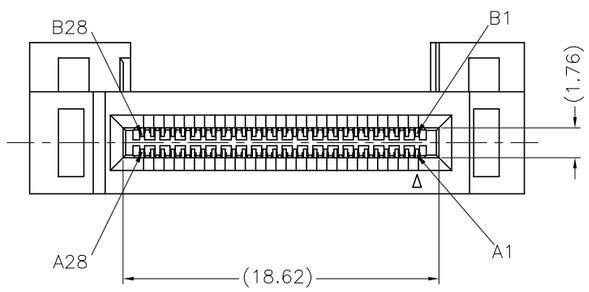

NOTE

1. HOUSING AND COVER: LCP, UL94–V0, BLACK.
   CONTACTS: COPPER ALLOY.
2. GOLD PLATED ON CONTACT AREA.
   TIN PLATE ON SOLDER TAIL AREA.
3. APPLICABLE HOST BOARD THICKNESS
4. OFFSET AMOUNT BETWEEN AIC BOARD AND HOST BOARD CENTER LINE.
5. SEE MSA SPECIFICATION FOR ADDITIONAL PADDLE CARD LAYOUTS COMPATABLE WITH THIS RECEPTACLE AND FOR OPTIONAL SPLIT CONTACT PAD LAYOUTS FOR THE PADDLE CARD. SPECIFICATION PINOUT MAY ALSO DESIGNATE PAD SEQUENCE DIFFERENT FROM ILLUSTRATION.
6. POSITIONS DESIGNATED AS "SIGNAL" ARE RECOMMENDED LOCATIONS FOR HIGH SPEED DIFFERENTIAL PAIR SIGNALING. THESE LOCATIONS MAY ALSO BE USED FOR SUPPORTING SIDEBAND SIGNALS OR OTHER UTILITY PURPOSES.POSITIONS DESIGNATED AS "GROUND" ARE REQUIRED WHEN SUPPORTING HIGH SPEED DIFFERENTIAL SIGNALS. THESE LOCATIONS MAY ALSO BE USED FOR SIDEBAND SIGNALS OR OTHER UTILITY PUPOSES.
7. CONTROLLED ACROSS PADS.
8. THIS LAYOUT IS ADOPTED IN SFF–TA–1002 Rev 1.1
9. SCREW IS ENCLOSED BY SEPARATE PACKING.
   SCREW SIZE: M2
   SCREW LENGTH(REF): 6
   HEAD SIZE(REF): ø3.5, 1.3HEIGHT
10. DATE CODE MARKING.

PLATING	4 DIM A	3 DIM B (HOST BOARD THICKNESS)	PARTS No.
0.76μm Au	0	$1.57^{\pm 0.15}$	2340311–1

AS SHOWN : –1

HVM DESIGN

QTY	NAME	ITEM No.
2	M2 SCREW	
2	M2 NUT PLATE	4
2	COVER HOUSING 28P	3
1	HOUSING	2
56	CONTACT	1

9

PROPOSAL DRAWING

THIS PRINT IS
PRELIMINARY
UNQUALIFIED PRODUCT
THESE SPEC MAY BE CHANGED BASED ON ADDITIONAL INVESTIGATION AND TESTING WITHOUT YOUR PERMISSION.

PRELIMINARY

THIS DRAWING IS A CONTROLLED DOCUMENT.

DIMENSIONS: mm

TOLERANCES UNLESS OTHERWISE SPECIFIED: ±0.3
0 PLC ± –
1 PLC ± –
2 PLC ± –
3 PLC ± –
4 PLC ± –
ANGLES ± –

MATERIAL 1 | FINISH 2

DWN J.TSUJI 01OCT2018
CHK K.KOBAYASHI 01OCT2018
APVD K.KOBAYASHI 01OCT2018
PRODUCT SPEC –
APPLICATION SPEC –
WEIGHT 0

TE Connectivity

NAME 56 POSITION SLIVER 2.0 STRADDLE MOUNT

SIZE A2 | CAGE CODE 00779 | DRAWING NO C–2340331 | RESTRICTED TO –

CUSTOMER DRAWING | SCALE 4:1 | SHEET 1 OF 4 | REV 2

2340331

THIS DRAWING IS UNPUBLISHED. RELEASED FOR PUBLICATION -,- .
© COPYRIGHT – TE Connectivity ALL RIGHTS RESERVED.

REVISIONS

P	LTR	DESCRIPTION	DATE	DWN	APVD
	–	SEE SHEET 1	–	–	–

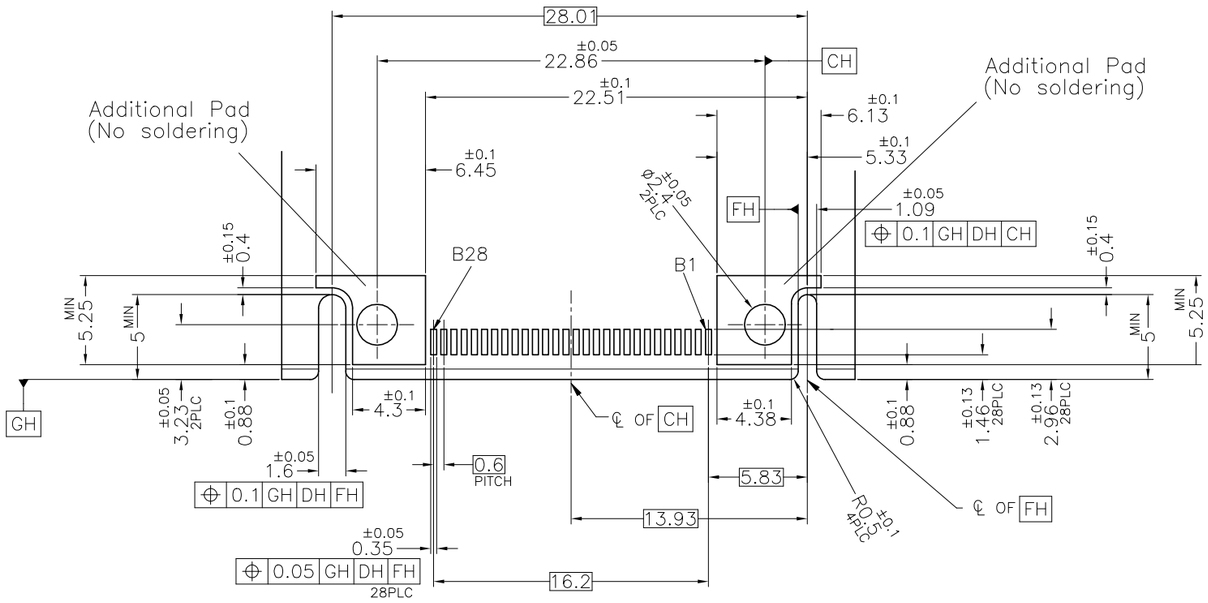

REFERENCE HOST BOARD LAYOUT

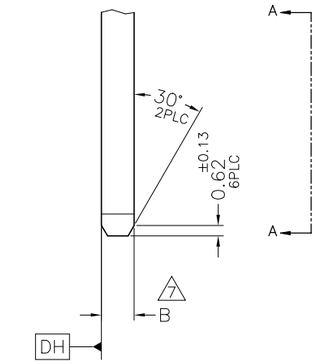

3 APPLICABLE THICKNESS

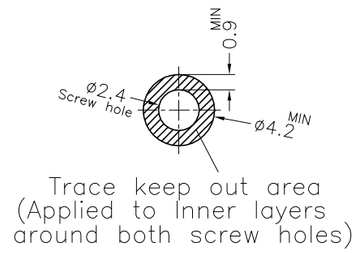

Trace keep out area (Applied to Inner layers around both screw holes)

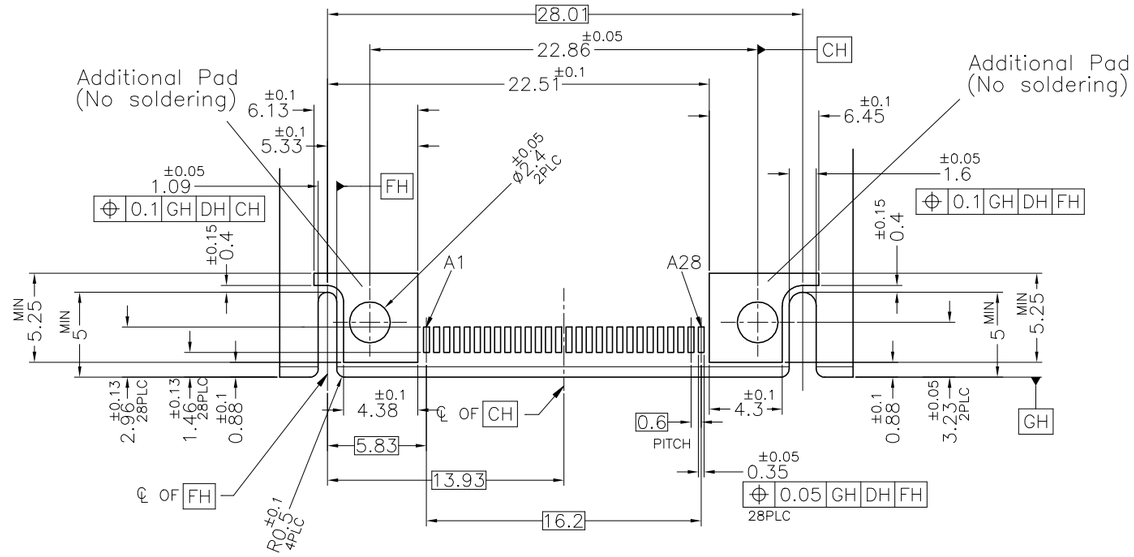

PROPOSAL DRAWING

THIS PRINT IS
PRELIMINARY
UNQUALIFIED PRODUCT
THESE SPEC MAY BE CHANGED BASED ON ADDITIONAL INVESTIGATION AND TESTING WITHOUT YOUR PERMISSION.

THIS DRAWING IS A CONTROLLED DOCUMENT.

DIMENSIONS: mm

TOLERANCES UNLESS OTHERWISE SPECIFIED: ±0.3
0 PLC ± –
1 PLC ± –
2 PLC ± –
3 PLC ± –
4 PLC ± –
ANGLES ± –

MATERIAL
FINISH

DWN –
CHK –
APVD –
PRODUCT SPEC –
APPLICATION SPEC –
WEIGHT 0

TE Connectivity

NAME
56 POSITION
SLIVER 2.0 STRADDLE MOUNT

SIZE	CAGE CODE	DRAWING NO	RESTRICTED TO
A2	00779	C-2340331	–

CUSTOMER DRAWING | SCALE 4:1 | SHEET 2 OF 4 | REV 2

2340331

1471-9 (1/15)

THIS DRAWING IS UNPUBLISHED. RELEASED FOR PUBLICATION -,- .
© COPYRIGHT – TE Connectivity ALL RIGHTS RESERVED.

REVISIONS

P	LTR	DESCRIPTION	DATE	DWN	APVD
	–	SEE SHEET 1	–	–	–

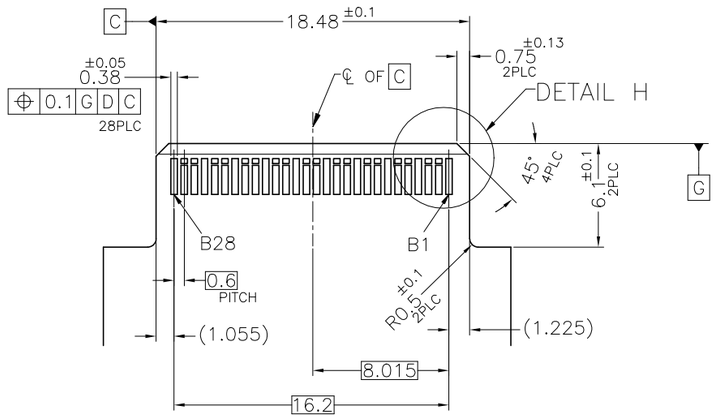

8 REFERENCE AIC BOARD LAYOUT

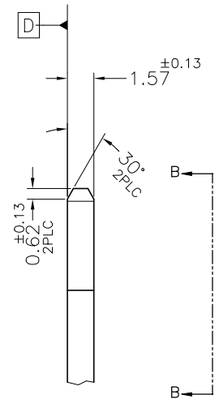

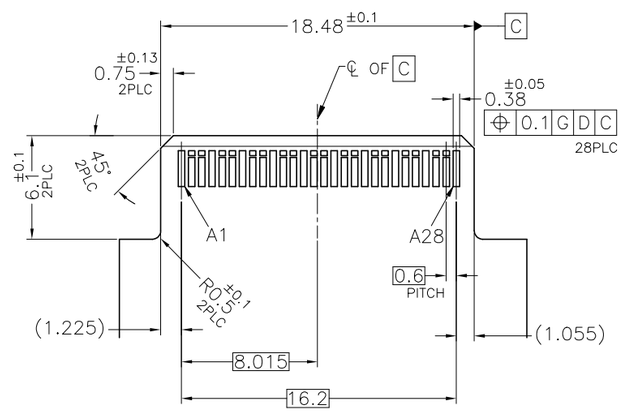

VIEW B–B

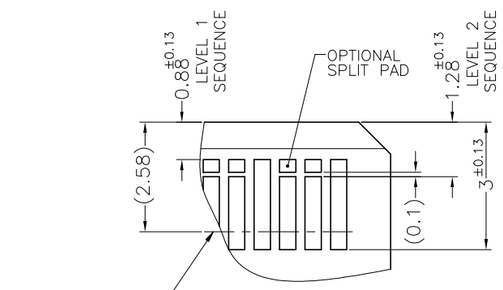

5 DETAIL H
SCALE 10:1

2340331

PROPOSAL DRAWING

THIS PRINT IS
PRELIMINARY
UNQUALIFIED PRODUCT
THESE SPEC MAY BE CHANGED BASED ON ADDITIONAL INVESTIGATION AND TESTING WITHOUT YOUR PERMISSION.

THIS DRAWING IS A CONTROLLED DOCUMENT.

DIMENSIONS: mm

TOLERANCES UNLESS OTHERWISE SPECIFIED: ±0.3
0 PLC ± –
1 PLC ± –
2 PLC ± –
3 PLC ± –
4 PLC ± –
ANGLES ± –

MATERIAL
FINISH

DWN –
CHK –
APVD –
PRODUCT SPEC –
APPLICATION SPEC –
WEIGHT 0

TE Connectivity

NAME
56 POSITION
SLIVER 2.0 STRADDLE MOUNT

SIZE	CAGE CODE	DRAWING NO	RESTRICTED TO
A2	00779	C-2340331	–

CUSTOMER DRAWING | SCALE 4:1 | SHEET 3 OF 4 | REV 2

THIS DRAWING IS UNPUBLISHED. RELEASED FOR PUBLICATION -,- .
© COPYRIGHT - TE Connectivity ALL RIGHTS RESERVED.

REVISIONS					
P	LTR	DESCRIPTION	DATE	DWN	APVD
	-	SEE SHEET 1	-	-	-

CONNECTOR CONTACT IDENTIFICATION 5 6

CONTACT NUMBER	SIDE A	SIDE B
1	GROUND	GROUND
2	SIGNAL	SIGNAL
3	SIGNAL	SIGNAL
4	GROUND	GROUND
5	SIGNAL	SIGNAL
6	SIGNAL	SIGNAL
7	GROUND	GROUND
8	SIGNAL	SIGNAL
9	SIGNAL	SIGNAL
10	GROUND	GROUND
11	SIGNAL	SIGNAL
12	SIGNAL	SIGNAL
13	GROUND	GROUND
14	SIGNAL	SIGNAL
15	SIGNAL	SIGNAL
16	GROUND	GROUND
17	SIGNAL	SIGNAL
18	SIGNAL	SIGNAL
19	GROUND	GROUND
20	SIGNAL	SIGNAL
21	SIGNAL	SIGNAL
22	GROUND	GROUND
23	SIGNAL	SIGNAL
24	SIGNAL	SIGNAL
25	GROUND	GROUND
26	SIGNAL	SIGNAL
27	SIGNAL	SIGNAL
28	GROUND	GROUND

PROPOSAL DRAWING

THIS PRINT IS
PRELIMINARY
UNQUALIFIED PRODUCT
THESE SPEC MAY BE CHANGED BASED ON ADDITIONAL INVESTIGATION AND TESTING WITHOUT YOUR PERMISSION.

THIS DRAWING IS A CONTROLLED DOCUMENT.

DIMENSIONS: mm

TOLERANCES UNLESS OTHERWISE SPECIFIED:
0 PLC ± -
1 PLC ± -
2 PLC ± -
3 PLC ± -
4 PLC ± -
ANGLES ± -

MATERIAL

FINISH

DWN -
CHK -
APVD -
PRODUCT SPEC -
APPLICATION SPEC -
WEIGHT 0

TE Connectivity

NAME
56 POSITION
SLIVER 2.0 STRADDLE MOUNT

SIZE	CAGE CODE	DRAWING NO	RESTRICTED TO
A2	00779	C-2340331	-

CUSTOMER DRAWING | SCALE 1:1 | SHEET 4 OF 4 | REV 2

2340331

1471-9 (1/15)

Компания «ЭлектроПласт» предлагает заключение долгосрочных отношений при поставках импортных электронных компонентов на взаимовыгодных условиях!

Наши преимущества:

- Оперативные поставки широкого спектра электронных компонентов отечественного и импортного производства напрямую от производителей и с крупнейших мировых складов;
- Поставка более 17-ти миллионов наименований электронных компонентов;
- Поставка сложных, дефицитных, либо снятых с производства позиций;
- Оперативные сроки поставки под заказ (от 5 рабочих дней);
- Экспресс доставка в любую точку России;
- Техническая поддержка проекта, помощь в подборе аналогов, поставка прототипов;
- Система менеджмента качества сертифицирована по Международному стандарту ISO 9001;
- Лицензия ФСБ на осуществление работ с использованием сведений, составляющих государственную тайну;
- Поставка специализированных компонентов (Xilinx, Altera, Analog Devices, Intersil, Interpoint, Microsemi, Aeroflex, Peregrine, Syfer, Eurofarad, Texas Instrument, Miteq, Cobham, E2V, MA-COM, Hittite, Mini-Circuits,General Dynamics и др.);

Помимо этого, одним из направлений компании «ЭлектроПласт» является направление «Источники питания». Мы предлагаем Вам помощь Конструкторского отдела:

- Подбор оптимального решения, техническое обоснование при выборе компонента;
- Подбор аналогов;
- Консультации по применению компонента;
- Поставка образцов и прототипов;
- Техническая поддержка проекта;
- Защита от снятия компонента с производства.

Как с нами связаться

Телефон: 8 (812) 309 58 32 (многоканальный)
Факс: 8 (812) 320-02-42
Электронная почта: org@eplast1.ru
Адрес: 198099, г. Санкт-Петербург, ул. Калинина, дом 2, корпус 4, литера А.