M-985-01
Precise Call Progress and Special Information Tone Generator

Features
- Precise detection of call progress tones
- Linear (analog) input
- Digital (CMOS compatible), tri-state outputs
- 22-pin DIP and 20-pin SOIC
- Single supply 3 to 5 volt (low power CMOS)
- Inexpensive 3.58 MHz crystal time base
- Wide dynamic range (30 dB)
- Lower power consumption (power-down mode)
- 425 Hz detection
- Special Information Tone (SIT) Detection

Applications
- Automatic dialers
- Dialing modems
- Traffic measurement equipment
- Test equipment
- Service evaluation
- Billing systems

Description
The M-985-01 is an integrated circuit precise tone detector for call progress and special information tones (SIT), as defined by CCITT.

The use of integrated circuit techniques allows the M-985-01 to pack the eight filters for call progress detection into a single 22-pin DIP or a 20-pin SOIC. A 3.58 MHz crystal-controlled time base guarantees accuracy and repeatability.

The M-985-01 combines the call progress detection of the M-982-02 and the SIT detection of the M-984-02. It has an operating voltage range down to 3V. It has low power consumption under normal operating conditions. A power down (PD) feature is provided to further reduce power consumption when inactive.

Ordering Information

Part #	Description
M-985-01P	22-pin plastic DIP
M-985-01S	20-pin plastic SOIC
M-985-01T	20-pin plastic SOIC,Tape and Reel

Pin Diagram

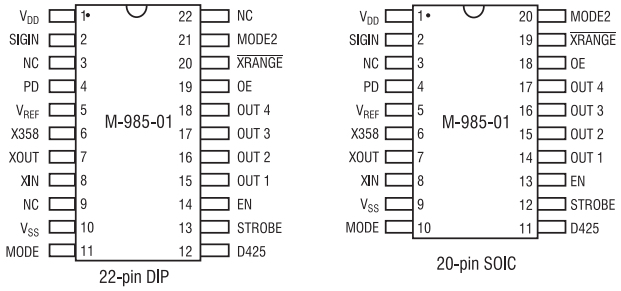

Block Diagram

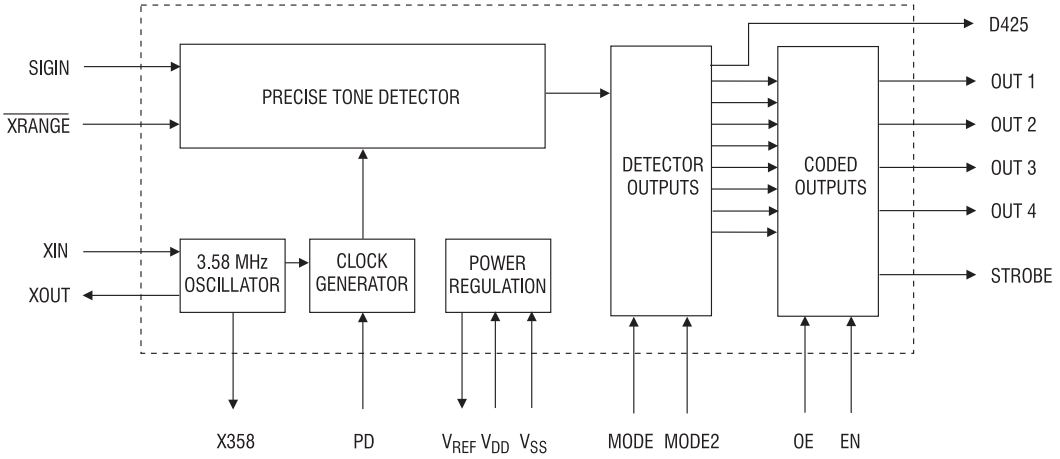

Absolute Maximum Ratings

Storage Temperature	-40 to 150°C
Operating Ambient Temperature	-40 to 85°C
V_{DD}	7V
Input Voltage on SIGIN	V_{SS} - 6.5 to V_{DD} + 0.3V
Input Voltages (except SIGIN)	V_{SS} - 0.3 to V_{DD} + 0.3 V
Lead Soldering Temperature	260° C for 5 seconds

Note:
Exceeding these ratings may permanently damage the M-985-01.

Absolute Maximum Ratings are stress ratings. Stresses in excess of these ratings can cause permanent damage to the device. Functional operation of the device at these or any other conditions beyond those indicated in the operational sections of this data sheet is not implied. Exposure of the device to the absolute maximum ratings for an extended period may degrade the device and effect its reliability.

Specifications

Parameter		Conditions	Min	Max	Units	Notes
Operating Conditions	V_{DD}	-	2.7	5.5	V	-
	Power supply noise	0.1 - 5 kHz	-	20	mV p-p	-
Power	Current drain (I_{DD})	-	-	15	mA	-
V_{REF}	V_{REF}	-	48% of V_{DD}	52% of V_{DD}	V	-
	Impedance	-	3.25	8.25	kΩ	
Signal Detection, all tones except SIT tones.	Frequency range	in-band signal	-1	+1	% of f_o	1
	Level: V_{DD} = 5.0v	$\overline{XRANGE}$ = open	-30 (24.5 mV)	0 (775 mV)	dBm	
		$\overline{XRANGE}$ = V_{SS}	-40 (7.8 mV)	-10 (245 mV)	dBm	
	Level: V_{DD} = 3.0V	$\overline{XRANGE}$ = open	-33 (17.4 mV)	-3 (549 mV)	dBm	
		$\overline{XRANGE}$ = V_{SS}	-43 (5.5 mV)	-13 (173.5 mV)	dBm	
	Duration (t_{DD})	-	200	-	ms	
	Signal drop out bridging time (t_{BB})	-	-	20	ms	
	Level skew between adjacent inband signals	for detection of both	-	6	dB	
	High level to low level signal for detection of both (t_{IL})	High = 0 dBm (775 mV) Low = -30 dBm (24.5 mV)	1	-	s	
	Time to output (t_{DO})	SIGIN ≥ -24 dBm	-	200	ms	
		SIGIN < -24 dBm	-	240	ms	
	Time from OUT n to STROBE (t_{DS})	-	-	10	µs	
Signal Detection, 940, 1400, 1800 Hz	Frequency Range	-	-	-	-	2
	Level: V_{DD} = 5.0V	$\overline{XRANGE}$ = open	-30 (24.5 mV)	0 (775 mV)	dBm	-
		$\overline{XRANGE}$ = V_{SS}	-40 (7.8 mV)	-10 (245 mv)	dBm	
	Level: V_{DD} = 3.0V	$\overline{XRANGE}$ = open	-33 (17.4 mV)	-3 (549 mV)	dBm	
		$\overline{XRANGE}$ = V_{SS}	-43 (5.5 mV)	-13 (173.5 mV)	dBm	
	Duration	-	50	-	ms	
	Signal drop out bridging time (t_{BB})	-	-	15	ms	
	Signal to noise ratio	-	16	-	dB	
Signal Rejection, all tones except SIT tones.	Frequency range	-	-6	+6	% of f_0	1
	Level: V_{DD} = 5.0V	$\overline{XRANGE}$ = open	-	-50 (2.5 mV)	dBm	-
		$\overline{XRANGE}$ = V_{SS}	-	-60 (0.8 mv)	dBm	
	Level: V_{DD} = 3.0V	$\overline{XRANGE}$ = open	-	-53 (1.7 mV)	dBm	
		$\overline{XRANGE}$ = V_{SS}	-	-65 (.55 mV)	dBm	
	Interval duration (t_{ID})	-	160	-	ms	
	Time to end of output (t_{IO})	-	-	200	ms	

Specifications (Continued)

Parameter			Conditions	Min	Max	Units	Notes
Signal Rejection, 950, 1400, 1800 Hz	Frequency Range		-	-	-	-	2
	Level: V_{DD} = 5.0V		$\overline{XRANGE}$ = open	-	-40 (7.8 mV)	dBm	-
			$\overline{XRANGE}$ = V_{SS}	-	-50 (2.5 mV)	dBm	-
	Level: V_{DD} = 3.0V		$\overline{XRANGE}$= open	-	-43 (5.5 mV)	dBm	-
			$\overline{XRANGE}$= V_{SS}	-	-53 (1.7 mV)	dBm	-
	Duration		-	50	ms	-	-
Outputs	OUT n,	V_{OL}	I_{SINK} = -1mA	-	0.5	V	-
	STROBE pins	V_{OH}	I_{SOURCE} = 1mA	V_{DD} -0.5	-	V	-
	OUT n pins	I_{OZ}	V_O=V_{DD}, V_{SS}	-	1	µA	-
Inputs	EN, OE, $\overline{XRANGE}$, MODE, PD pins	V_{IL}	-	-	0.5	V	-
		V_{IH}	V_{DD} = 5V	V_{DD} - 2.0	-	V	-
			V_{DD} = 2.7V	V_{DD} - 0.5	-	V	-
	Pull-up and Pull-down currents	MODE = V_{SS}	V_{DD} = 5V	12.5	50	µA	-
			V_{DD} = 2.7V	4	20	µA	-
		/XRANGE = V_{SS}	-	2	6	µA	-
		MODE2 = V_{DD}	V_{DD} = 5V	12.5	100	µA	-
			V_{DD} = 2.7V	12.5	25	µA	-
		PD = V_{DD}	-	4	10	µA	-
	PD pin	Pull-down current	PD = V_{DD}	12.5	50	µA	-
	SIGIN pin	Voltage range	-	-6.5	V_{DD}	V	-
		Input impedance	f=500 Hz	80	-	kΩ	-
		Input spectrum	-	-	28	kHz	-
Clock	External clock connected to XIN pin	V_{IL}	XOUT open	-	0.2	V	-
		V_{IH}	XOUT open	V_{DD}-0.2	-	V	-
		Duty cycle	XOUT open	40	60	%	-
	XIN, XOUT with crystal osc. active	Capacitance	-	-	10	pF	-
		Internal resistance	-	20	-	MΩ	-
		Power up (t_{PU})	PD hi to lo	-	30	ms	-
	X358 pin	V_{OL}	C_L = 20 pF, I_{SINK} = -1mA	-	0.2	V	-
		V_{OH}	C_L = 20 pF, I_{SOURCE} = 1mA	V_{DD} - 0.2	-	V	-
		Duty cycle	C_L = 20 pF	40	60	%	-
Tri-state Operation	t_{EN} (High Z to Low Z)		C_L = 50 pF, R_L = 100 kΩ	-	250	ns	-
	t_{DE} (Low Z to High Z)			-	250	ns	

Unless otherwise noted, V_{DD} - V_{SS} = 5V, Ta = 25°C, PD at logical low state, and $\overline{XRANGE}$ at a logical high state. Power levels are in dBm referenced to 600 ohm. DC voltages are referenced to V_{SS}.

Notes:

1. Per tone.
2. See Table 4 for detection/rejection frequencies.

Call Progress Tone Detection

Call progress tones are audible tones sent from switching systems to calling parties to show the status of calls. Calling parties can identify the success of a call placed by what is heard after dialing. The type of tone used and its timing vary from system to system, and though intended for human ears these signals can provide valuable information for automated calling systems.

The M-985-01 contains five signal detectors sensitive to the frequencies often used for these progress tones. Electronic equipment monitoring the OUTn outputs of the M-985-01 can determine the nature of signals present by measuring their duty cycle. See Mechanical Dimensions for a diagram of a circuit that could be used to permit a microcomputer to directly monitor tones on the telephone line. Much of the character of the progress tones is in their duty cycle or cadence (sometimes referred to as interruption rate). This information, coupled with level and frequency indication from the M-985-01, can be used to decide what progress tones have been encountered.

Pin Functions

Pin	Function
OUT 1	Active high tri-state output, per Truth Table.
OUT 2	Active high tri-state output, per Truth Table.
OUT 3	Active high tri-state output, per Truth Table
OUT 4	Active high tri-state output, per Truth Table
D425	Active high tri-state output, indicates 425 Hz detection.
EN	Active high enabled, when low drives STROBE low.
OE	Active high input. When low tri-states OUT n pins.
SIGIN	Analog signal input (internally capacitive coupled).
STROBE	Active high output, indicates valid OUT n or D425
VDD	Most positive power supply input pin.
VREF	Internally generated mid-power supply voltage (output)
V_{SS}	Most negative power supply input pin.
X358	Buffered oscillator output (3.58 MHz).
XIN	Crystal oscillator or digital clock input.
XOUT	Crystal oscillator output. Used only with a crystal. Use X358 when clock output signal is required.
$\overline{\text{XRANGE}}$	Active low input. Adds 10 dB of gain to input stage.
MODE	Selects 400/620 Hz detector frequency, 400 Hz when connected to V_{SS}, 620 Hz when open.
PD	Power down operation, logic high inhibits internal clock. Internal pulldown resistor.
MODE2	Tie high (V_{DD}) for normal operation. Tie low or leave open to emulate M-982 operation.

For example, dial tones shown in absolute Maximum Ratings Table on page 3, are usually “on” continuously and last until the first dial digit is received by the switching system. Line Busy, on the other hand, is turned off and on at a rate of 1 Hz with a 50% duty cycle, or an interruption rate of 60 times per minute (60 IPM). The tones can be distinguished in this way. It should be noted that while such techniques will usually be effective, there are some circumstances in which the M-985-01 cannot be accurately used. Examples include situations where ringback tone may be short or not even encountered. Ringback may be provided at ringing voltage frequency (20 or 30 Hz) with some harmonics and may not fall in the detect range, and speech or other strong noise may obscure tones making cadence measurement difficult.

Standards exist and should be consulted for your particular application. In North America AT&Ts “Notes on the Network” or EIA’s RS-464 PBX standard should be reviewed.

In Europe tone plans may vary with locale, in which case the CEPT administration in each country must be consulted. Outside these areas, national PTT organizations can provide information on the systems within their borders.

Truth Table

Signal Present (fo)	Mode	OUT 1	OUT 2	OUT 3	OUT 4	D425	Strobe	PD	OE	EN
350 Hz	X	1	0	0	0	X	1	0	1	1
400 Hz (Note 1)	0	0	1	0	0	X	1	0	1	1
425 Hz	X	X	X	X	X	1	1	0	1	1
440 Hz	X	1	1	0	0	X	1	0	1	1
480 Hz	X	0	0	1	0	X	1	0	1	1
620 Hz (Note 2)	1	1	0	1	0	X	1	0	1	1
950 Hz	X	0	1	1	0	X	1	0	1	1
1400 Hz	X	1	1	1	0	X	1	0	1	1
1800 Hz	X	0	0	0	1	X	1	0	1	1
350 & 440 Hz	X	1	0	0	1	X	1	0	1	1
350 & 480 Hz	X	0	1	0	1	X	1	0	1	1
350 & 620 Hz (Note 2)	1/open	1	1	0	1	X	1	0	1	1
440 & 480 Hz	X	0	0	1	1	X	1	0	1	1
440 & 620 Hz (Note 2)	X	1	0	1	1	X	1	0	1	1
480 & 620 Hz (Note 2)	X	0	1	1	1	X	1	0	1	1
Invalid Tone Combination	X	1	1	1	1	X	1	0	1	1
Other (no detect)	X	0	0	0	0	0	0	0	1	1
Any	X	0	0	0	0	0	0	1	1	X

Truth Table (Continued)

Signal Present (fo)	Mode	OUT 1	OUT 2	OUT 3	OUT 4	D425	Strobe	PD	OE	EN
Any	X	0	0	0	0	0	0	0	1	0
Any	X	High Impedance					X	0	0	1
Any	X	High Impedance					0	0	0	0
Any	X	High Impedance					X	1	0	X

Notes:

1. This output indicates 400 Hz detect when MODE is connected to V_{SS}.
2. This output indicates 620 Hz detect when MODE is open or connected to V_{DD}.

Detector Frequency Windows for SIT Tones

Detector	Low Reject	Low Accept	High Accept	High Reject
D950	835	885	1016	1070
D1400	1275	1328	1472	1527
D1800	1656	1722	1854	1924

Call Progress Tones

1	2	
350	440	Dial Tone
400	Off	Special
440	Off	Alert Tone
440	480	Audible Ring
440	620	Pre-empt
480	Off	Bell High Tone
480	620	Reorder (Bell Low)
350	Off	Special
620	Off	Special
425	Off	European

SIT Timing

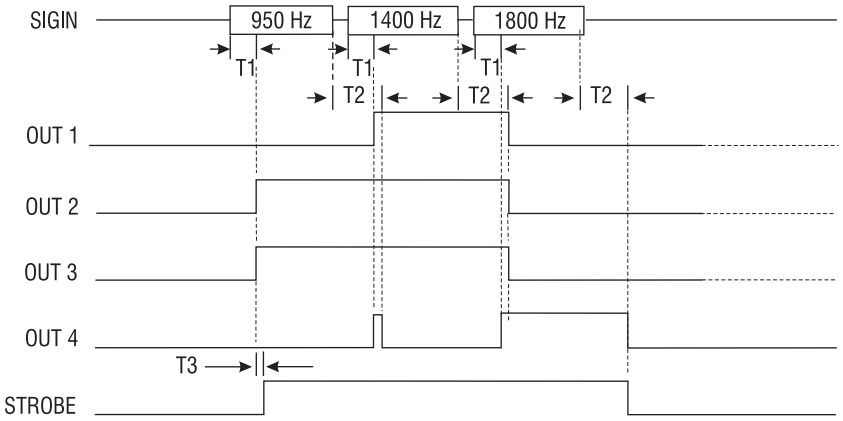

T1 = 60 ms Typical (Signal detect time)
T2 = 70 ms Typical (Signal dropout time)
T3 = 8 µs Typical (Envelope delay)

Signal Timing (See Specifications)

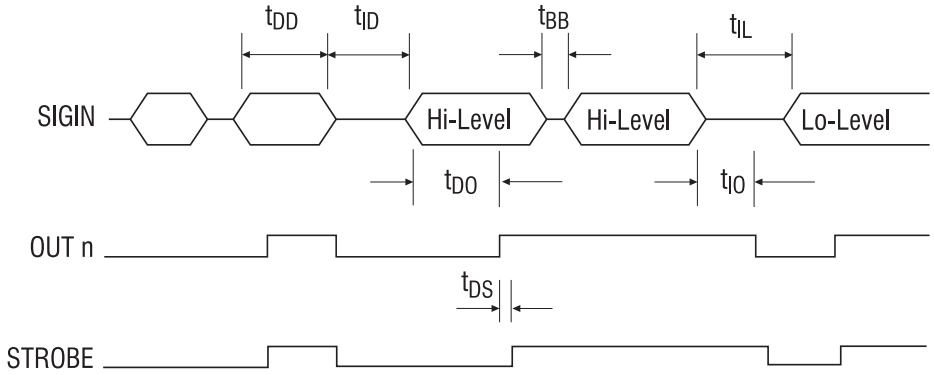

Tri-State Timing

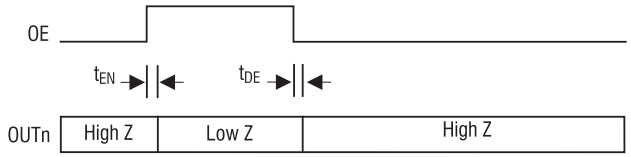

Power-Down Timing

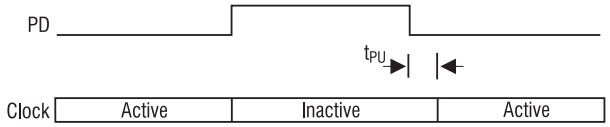

Typical Application

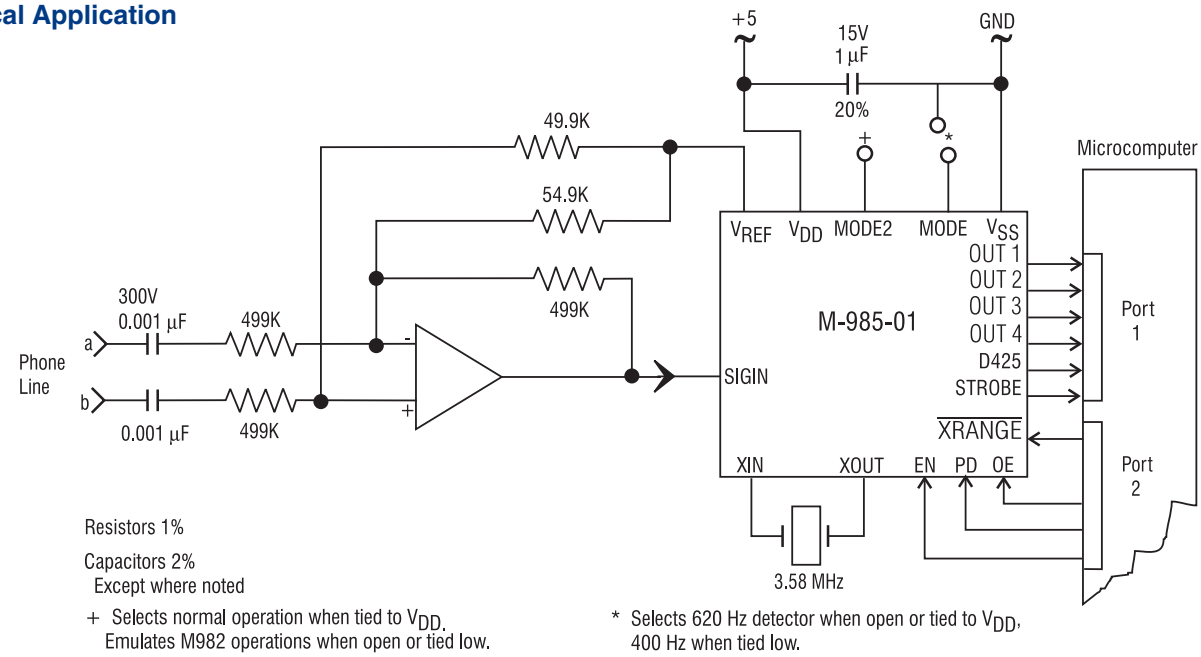

MECHANICAL DIMENSIONS

22-Pin DIP

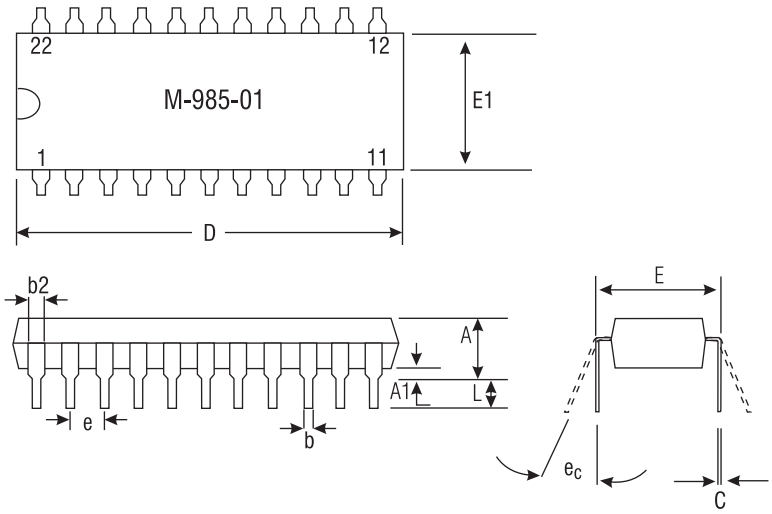

	Tolerances (inches)			Metric Approximation (mm)		
	Min	Nom	Max	Min	Nom	Max
A			.210			5.33
A1	.015			.38		
b	.014		.022	.36		.56
b2	.045	.060	.065	1.1	1.5	1.7
C	.009		.015	.23		.38
D	1.065	1.085	1.120	27.1	27.6	28.4
E	.390	.415	.425	9.9	10.5	10.8
E1	.330	.360	.390	8.4	9.1	9.9
e	.100 BSC			2.54 BSC		
ec	0°	15°	15°	0°		15°
L	.115	.130	.160	2.9	3.3	4.1

20-Pin SOIC

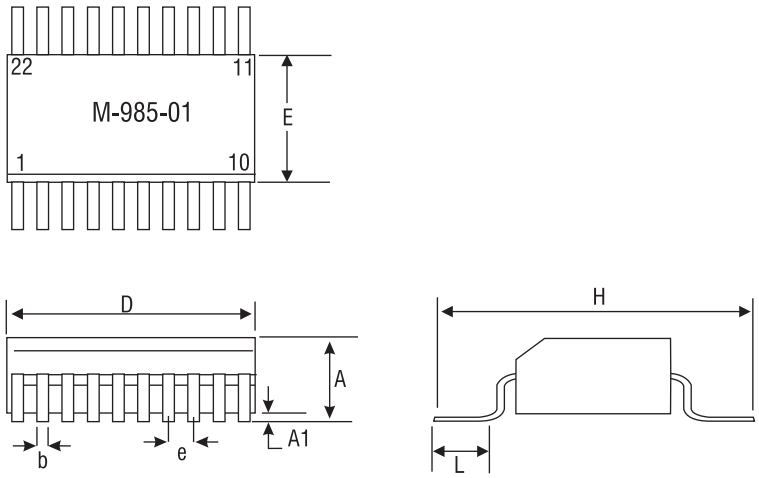

	Tolerances (mm)		SAE approximation (inches)	
	Min	Max	Min	Max
A	2.35	2.65	.0926	.1043
A1	.10	.30	.0040	.0118
b	.33	.51	.013	.020
D	12.60	13.00	.4961	.5118
E	7.4	7.6	.2914	.2992
e	1.27 BSC		.050 BSC	
H	10.00	10.65	.394	.419
L	.40	1.27	.016	.050

Drawing not to scale.
Does not reflect actual part marking.

Dimensions
mm
(inches)

CLARE

Worldwide Sales Offices

CLARE LOCATIONS

Clare Headquarters
78 Cherry Hill Drive
Beverly, MA 01915
Tel: 1-978-524-6700
Fax: 1-978-524-4900
Toll Free: 1-800-27-CLARE

Clare Switch Division
4315 N. Earth City Expressway
Earth City, MO 63045
Tel: 1-314-770-1832
Fax: 1-314-770-1812

Clare Micronix Division
145 Columbia
Aliso Viejo, CA 92656-1490
Tel: 1-949-831-4622
Fax: 1-949-831-4628

SALES OFFICES

AMERICAS

Americas Headquarters
Clare
78 Cherry Hill Drive
Beverly, MA 01915
Tel: 1-978-524-6700
Fax: 1-978-524-4900
Toll Free: 1-800-27-CLARE

Eastern Region
Clare
603 Apache Court
Mahwah, NJ 07430
Tel: 1-201-236-0101
Fax: 1-201-236-8685
Toll Free: 1-800-27-CLARE

Central Region
Clare Canada Ltd.
3425 Harvester Road, Suite 202
Burlington, Ontario L7N 3N1
Tel: 1-905-333-9066
Fax: 1-905-333-1824

Western Region
Clare
1852 West 11th Street, #348
Tracy, CA 95376
Tel: 1-209-832-4367
Fax: 1-209-832-4732
Toll Free: 1-800-27-CLARE

Canada
Clare Canada Ltd.
3425 Harvester Road, Suite 202
Burlington, Ontario L7N 3N1
Tel: 1-905-333-9066
Fax: 1-905-333-1824

EUROPE

European Headquarters
CP Clare nv
Bampslaan 17
B-3500 Hasselt (Belgium)
Tel: 32-11-300868
Fax: 32-11-300890

France
Clare France Sales
Lead Rep
99 route de Versailles
91160 Champlan
France
Tel: 33 1 69 79 93 50
Fax: 33 1 69 79 93 59

Germany
Clare Germany Sales
ActiveComp Electronic GmbH
Mitterstrasse 12
85077 Manching
Germany
Tel: 49 8459 3214 10
Fax: 49 8459 3214 29

Italy
C.L.A.R.E.s.a.s.
Via C. Colombo 10/A
I-20066 Melzo (Milano)
Tel: 39-02-95737160
Fax: 39-02-95738829

Sweden
Clare Sales
Comptronic AB
Box 167
S-16329 Spånga
Tel: 46-862-10370
Fax: 46-862-10371

United Kingdom
Clare UK Sales
Marco Polo House
Cook Way
Bindon Road
Taunton
UK-Somerset TA2 6BG
Tel: 44-1-823 352541
Fax: 44-1-823 352797

ASIA/PACIFIC

Asian Headquarters
Clare
Room N1016, Chia-Hsin, Bldg II,
10F, No. 96, Sec. 2
Chung Shan North Road
Taipei, Taiwan R.O.C.
Tel: 886-2-2523-6368
Fax: 886-2-2523-6369

http://www.clare.com

Clare, Inc. makes no representations or warranties with respect to the accuracy or completeness of the contents of this publication and reserves the right to make changes to specifications and product descriptions at any time without notice. Neither circuit patent licenses nor indemnity are expressed or implied. Except as set forth in Clare's Standard Terms and Conditions of Sale, Clare, Inc. assumes no liability whatsoever, and disclaims any express or implied warranty, relating to its products including, but not limited to, the implied warranty of merchantability, fitness for a particular purpose, or infringement of any intellectual property right.

The products described in this document are not designed, intended, authorized or warranted for use as components in systems intended for surgical implant into the body, or in other applications intended to support or sustain life, or where malfunction of Clare's product may result in direct physical harm, injury, or death to a person or severe property or environmental damage. Clare, Inc. reserves the right to discontinue or make changes to its products at any time without notice.

Specification: DS-M985-01-R1
©Copyright 2001, Clare, Inc.
All rights reserved. Printed in USA.
7/24/01

Компания «ЭлектроПласт» предлагает заключение долгосрочных отношений при поставках импортных электронных компонентов на взаимовыгодных условиях!

Наши преимущества:

- Оперативные поставки широкого спектра электронных компонентов отечественного и импортного производства напрямую от производителей и с крупнейших мировых складов;
- Поставка более 17-ти миллионов наименований электронных компонентов;
- Поставка сложных, дефицитных, либо снятых с производства позиций;
- Оперативные сроки поставки под заказ (от 5 рабочих дней);
- Экспресс доставка в любую точку России;
- Техническая поддержка проекта, помощь в подборе аналогов, поставка прототипов;
- Система менеджмента качества сертифицирована по Международному стандарту ISO 9001;
- Лицензия ФСБ на осуществление работ с использованием сведений, составляющих государственную тайну;
- Поставка специализированных компонентов (Xilinx, Altera, Analog Devices, Intersil, Interpoint, Microsemi, Aeroflex, Peregrine, Syfer, Eurofarad, Texas Instrument, Miteq, Cobham, E2V, MA-COM, Hittite, Mini-Circuits,General Dynamics и др.);

Помимо этого, одним из направлений компании «ЭлектроПласт» является направление «Источники питания». Мы предлагаем Вам помощь Конструкторского отдела:

- Подбор оптимального решения, техническое обоснование при выборе компонента;
- Подбор аналогов;
- Консультации по применению компонента;
- Поставка образцов и прототипов;
- Техническая поддержка проекта;
- Защита от снятия компонента с производства.

Как с нами связаться

Телефон: 8 (812) 309 58 32 (многоканальный)
Факс: 8 (812) 320-02-42
Электронная почта: org@eplast1.ru
Адрес: 198099, г. Санкт-Петербург, ул. Калинина, дом 2, корпус 4, литера А.