REV	DESCRIPTION	DATE	APPROVED
A	ENGINEERING RELEASE.	10/15/03	MC
B	Updated TO-21 ID	09/05/06	MC
C	Updated Part Thicknesses Offered	09/08/10	TY
D	Corrected TO-13 O.D. Typo. Should be .310	07/03/12	TY

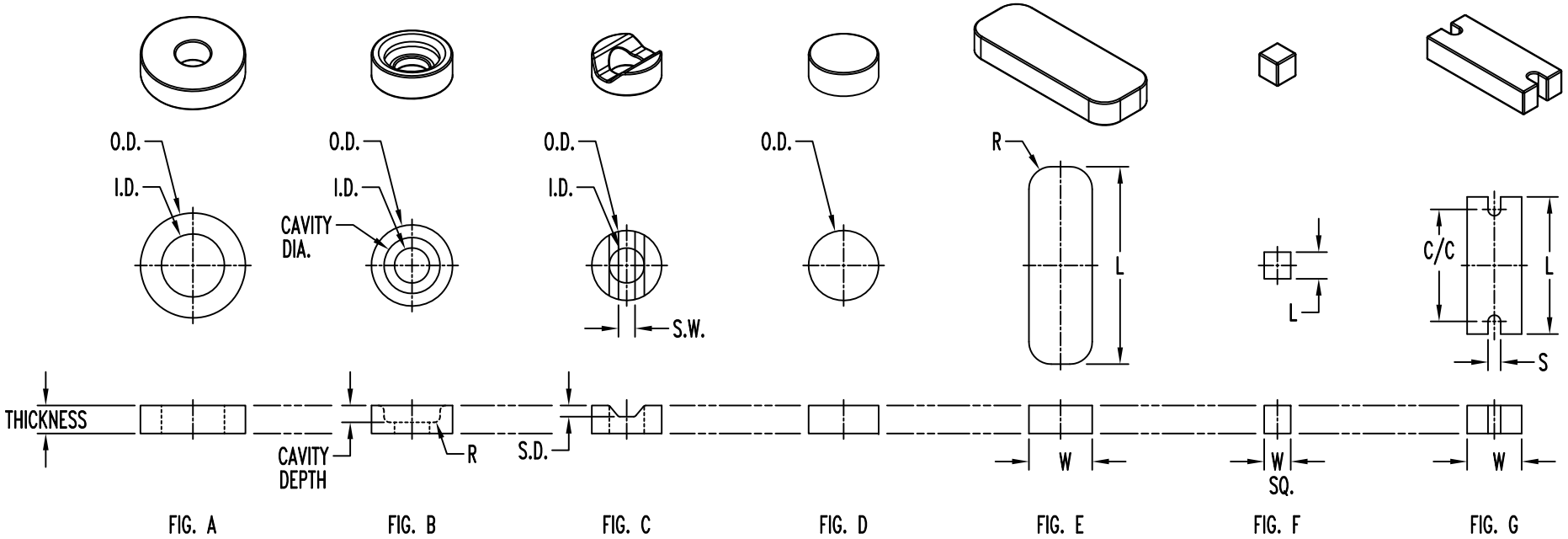

EXAMPLE:

TO-200-100E

- Suffix I.D. (see Table 1)
- Part Thickness
- TO Style
- Series

Table 1

SUFFIX I.D.	I.D. DESCRIPTION
NONE	Wax
E	Effervescent
CR	Color Removed
DR	Detergent Removed
H	Salt
XH	Extra Hard

UNLESS OTHERWISE SPECIFIED: DIMENSIONS ARE IN INCHES

TOLERANCES

DECIMALS		ANGULAR	
.X	± .1	X°	± 1°
.XX	± .01		
.XXX	± .005		

DESIGNER: DAVID GREEN — DATE: 10/15/03

CHECKER: M CHEN — DATE: 10/15/03

Bivar®
4 THOMAS, IRVINE, CA.92618
TEL: (949) 951-8808 FAX: (949) 951-3974

PART NAME: DISS-O-PADS, WASH-AWAY COMPONENTS & GENERAL PURPOSE SPACERS

SIZE	DWG NAME	DWG NO.	REV
A		TO-XXX-XXX	D

SCALE 1=1 | CAGE CODE 32559 | SHEET 1 OF 3

REV	DESCRIPTION	DATE	APPROVED
	SEE SHEET #1.		

TO-5

PART NO.	I.D.	O.D.	THICKNESS	FIG.	TO-5
TO-5	.225 (5.7mm)	.375 (9.5mm)	.030, .040, .050, .060, .070, .085, .090, .100, .120, .130, .150, .170, .200, .230, .300	A	Spacer
TO-6	.250 (6.4mm)	.375 (9.5mm)	.030, .040, .050, .060, .070, .090, .100, .120, .130, .150, .160, .180, .190	A	I.C. Spacer
TO-9	.300 (7.8mm)	.437 (11.1mm)	.030, .040, .050, .070, .080, .090, .100, .120, .130, .150, .180, .200, .300	A	.300 (7.6mm) L.S.
TO-13	.225 (5.7mm)	.310 (7.9mm)	.030, .040, .050, .060, .070, .080, .090, .100, .120, .130, .150	A	Epoxy Case

TO-18

PART NO.	I.D.	O.D.	CAVITY DIA.	CAVITY DEPTH	THICKNESS	FIG.	TO-18
TO-12	.125 (3.2mm)	.310 (7.9mm)	.215 (5.5mm)	.065 (1.7mm)	.080, .090, .100, .120, .130, .180	B	.250 (6.4mm) L.S.
TO-16	.125 (3.2mm)	.205 (5.2mm)	–	–	.030, .040, .045, .050, .060, .070, .080, .090, .100, .120, .130, .150, .175, .200	A	Epoxy Case
TO-17	.170 (4.3mm)	.250 (6.4mm)	–	–	.030, .035, .040, .050, .060, .070, .090, .100, .120, .130, .140, .150, .170, .180, .200	A	Thin Walls
TO-18	.125 (3.2mm)	.250 (6.4mm)	–	–	.030, .040, .045, .050, .055, .060, .070, .080, .090, .100, .120, .125, .130, .150, .170, .190, .200, .250	A	Standard
TO-20	.125 (3.2mm)	.290 (7.4mm)	.200 (5.1mm)	.065 (1.7mm)	.070, .090, .100, .120, .130, .150	B	.200 (5.1mm) L.S.
TO-27	.125 (3.2mm)	.290 (7.4mm)	–	–	.030, .040, .050, .060, .070, .090, .100, .120, .130	A	Heavy Walls

AXIAL

PART NO.	I.D.	O.D.	THICKNESS	SLOT DEPTH	SLOT WIDTH	FIG.
TO-21	.125 (3.2mm)	.250 (6.4mm)	.050, .070, .080, .090, .100, .120, .130, .150, .170, .200, .230, .250	.045 (1.1mm)	.060 (1.5mm)	C
TO-35	–	.440 (11.2mm)	.100, .120, .130, .140, .150, .170, .180, .190, .220, .230, .250	.065 (1.7mm)	.230 (5.8mm)	C
TO-36	–	.187 (4.7mm)	.050, .060, .070, .080, .090, .100, .120, .130, .150	.040 (1.0mm)	.080 (2.0mm)	C
TO-37	–	.156 (4.0mm)	.050, .070, .080, .090, .100, .120	.025 (.64mm)	.050 (1.3mm)	C

ON-END/CORDWOOD

PART NO.	I.D.	O.D.	CAVITY DIA.	CAVITY DEPTH	THICKNESS	FIG.
TO-7	.075 (1.9mm)	.175 (4.4mm)	–	–	.030, .040, .050, .060, .070, .090, .100, .120, .130, .150, .180, .210	A
TO-8	.062 (1.6mm)	.156 (4.0mm)	–	–	.030, .035, .040, .050, .055, .060, .065, .070, .080, .085, .090, .100, .105, .120, .130, .150, .160, .190, .200, .210	A
TO-10	.040 (1.0mm)	.085 (2.2mm)	–	–	.025, .030, .040, .050, .060, .065, .070, .080, .090, .100	A
TO-11	.045 (1.1mm)	.100 (2.5mm)	–	–	.030, .040, .050, .060, .070, .080, .100, .110, .120	A
TO-26	.070 (1.8mm)	.187 (4.7mm)	–	–	.030, .040, .050, .060, .070, .090, .100, .120, .125, .150	A
TO-40	.045 (1.1mm)	.156 (4.0mm)	–	–	.030, .040, .050, .060, .070, .080, .090, .100, .120, .130, .150, .160	A
TO-64	.045 (1.1mm)	.140 (3.6mm)	–	–	.030, .035, .040, .050, .060, .070, .090, .100, .120, .125, .130, .140, .150, .160, .175	A
TO-65	.075 (1.9mm)	.140 (3.6mm)	–	–	.030, .040, .045, .050, .060, .070, .080, .090, .100, .120, .125, .130, .150, .175	A
TO-67	.045 (1.1mm)	.140 (3.6mm)	.090 (2.3mm)	.025 (.64mm)	.050, .055, .060, .070, .090, .100, .120, .130	B
TO-68	.045 (1.1mm)	.110 (2.8mm)	.075 (1.9mm)	.025 (.64mm)	.040, .050, .055, .060, .070, .090, .100, .120, .130, .150, .160	B

SOLID

PART NO.	I.D.	O.D.	THICKNESS	FIG.
TO-29	–	.156 (4.0mm)	.040, .050, .060, .070, .090, .100, .120, .130	D
TO-31	–	.125 (3.2mm)	.040, .050, .060, .070, .090, .100, .120, .130	D
TO-32	–	.187 (4.7mm)	.030, .040, .050, .060, .070, .080, .090, .100, .120, .130	D
TO-33	–	.250 (6.4mm)	.030, .040, .050, .060, .070, .080, .090, .100, .120, .130	D
TO-34	–	.375 (9.5mm)	.040, .050, .060, .070, .090, .100, .120, .130, .250	D

UNLESS OTHERWISE SPECIFIED:
DIMENSIONS ARE IN INCHES

TOLERANCES

DECIMALS		ANGULAR	
.X	± .1	X°	± 1°
.XX	± .01		
.XXX	± .005		

Bivar®
4 THOMAS, IRVINE, CA.92618
TEL: (949) 951-8808 FAX: (949) 951-3974

PART NAME: DISS-O-PADS,
WASH-AWAY COMPONENTS & GENERAL PURPOSE SPACERS

DESIGNER	DATE	SIZE	DWG NAME	DWG NO.	REV
DAVID GREEN	10/15/03	A		TO-XXX-XXX	D
CHECKER M CHEN	DATE 10/15/03	SCALE 1=1	CAGE CODE 32559	SHEET 2 OF 3	

REV	DESCRIPTION	DATE	APPROVED
	SEE SHEET #1.		

GENERAL PURPOSE

PART NO.	I.D.	O.D.	THICKNESS	FIG.
TO-46	.090 (2.3mm)	.250 (6.4mm)	.030, .040, .050, .060, .070, .090, .100, .120, .130, .150, .200, .240	A
TO-19	.250 (6.4mm)	.480 (12.2mm)	.030, .040, .050, .060, .070, .090, .100, .120, .130, .150, .190, .200, .230, .250	A
TO-22	.225 (5.7mm)	.437 (11.1mm)	.030, .040, .050, .060, .070, .080, .090, .100, .110, .120, .130, .150, .190, .200, .250	A
TO-23	.090 (2.3mm)	.310 (7.9mm)	.030, .040, .050, .055, .060, .070, .090, .100, .120, .130, .150, .180, .190, .200, .250	A
TO-24	.090 (2.3mm)	.340 (8.6mm)	.030, .040, .050, .060, .070, .090, .100, .120, .130, .150	A
TO-30	.275 (7.0mm)	.397 (10.0mm)	.030, .040, .050, .060, .070, .090, .100, .120, .130, .150	A
TO-25	.180 (4.6mm)	.480 (12.2mm)	.030, .040, .050, .060, .070, .090, .100, .120, .130, .150, .250	A
TO-28	.172 (4.4mm)	.343 (8.7mm)	.030, .040, .050, .060, .070, .090, .100, .120, .130, .180, .190	A
TO-41	.156 (4.0mm)	.360 (9.1mm)	.030, .040, .050, .060, .070, .090, .100, .120, .130, .140	A
TO-42	.250 (6.4mm)	.438 (11.1mm)	.030, .040, .050, .060, .070, .090, .100, .120, .130	A

RECTANGULAR & SQUARE

PART NO.	L	W	R	THICKNESS	FIG.	
TO-100	.670 (17.0mm)	.100 (2.5mm)	.031 (.79mm)	.030, .035, .040, .045, .050, .060, .065, .070, .075, .080, .090, .100, .120, .130, .150, .200	E	Rectangular
TO-101	.562 (14.3mm)	.185 (4.7mm)	–	.030, .040, .050, .060, .070, .080, .090, .100, .120, .130, .150, .160, .220	E	Rectangular
TO-102	.505 (12.8mm)	.160 (4.1mm)	–	.040, .050, .060, .070, .090, .100, .120, .130, .150	E	Rectangular
TO-116	.666 (16.9mm)	.300 (7.8mm)	.063 (1.6mm)	.030, .040, .050, .055, .060, .065, .070, .075, .080, .090, .100, .110, .120, .125, .130, .150, .180, .200	E	Rectangular
TO-117	.666 (16.9mm)	.281 (7.1mm)	.100 (2.54mm)	.030, .040, .050, .060, .070, .080, .090, .100, .120, .125, .130, .140, .150, .160	E	Rectangular
TO-118	.705 (17.9mm)	.260 (6.6mm)	.080 (2.0mm)	.030, .040, .050, .060, .070, .080, .090, .100, .110, .120, .130, .150, .160, .170, .175, .200	E	Rectangular
TO-120	.085 (2.2mm)	.085 (2.2mm)	–	.030, .035, .040, .045, .050, .060, .070, .090, .100, .120	F	Square
TO-121	.095 (2.4mm)	.095 (2.4mm)	–	.030, .035, .040, .045, .050, .060, .070, .075, .085, .090, .095, .100, .120	F	Square

RADIAL & AXIAL DEVICE

PART NO.	C/C	S	W	L	THICKNESS	FIG.
TO-200	.100 (2.5mm)	.035 (.89mm)	.095 (2.4mm)	.190 (4.8mm)	.030, .035, .040, .050, .060, .070, .080, .090, .100, .120, .130, .150	G
TO-201	.150 (3.8mm)	.035 (.89mm)	.095 (2.4mm)	.240 (6.1mm)	.030, .040, .050, .060, .070, .090, .100, .120, .130, .150	G
TO-203	.200 (5.1mm)	.035 (.89mm)	.095 (2.4mm)	.290 (7.4mm)	.030, .040, .050, .060, .070, .090, .100, .120, .130, .140, .150, .200	G
TO-204	.250 (6.4mm)	.040 (1.0mm)	.145 (3.7mm)	.340 (8.6mm)	.040, .050, .060, .070, .080, .090, .100, .120, .130, .150	G
TO-205	.300 (7.8mm)	.040 (1.0mm)	.145 (3.7mm)	.390 (9.9mm)	.040, .050, .060, .070, .090, .100, .120, .130, .150, .215	G
TO-206	.400 (10.2mm)	.045 (1.1mm)	.195 (5.0mm)	.490 (12.4mm)	.040, .050, .060, .070, .080, .090, .100, .120, .130, .150, .215	G
TO-207	.500 (12.7mm)	.045 (1.1mm)	.195 (5.0mm)	.590 (15.0mm)	.040, .050, .060, .070, .090, .100, .120, .130, .150	G

UNLESS OTHERWISE SPECIFIED:
DIMENSIONS ARE IN INCHES

TOLERANCES

DECIMALS		ANGULAR	
.X	± .1	X°	± 1°
.XX	± .01		
.XXX	± .005		

Bivar®
4 THOMAS, IRVINE, CA.92618
TEL: (949) 951-8808 FAX: (949) 951-3974

PART NAME: DISS-O-PADS, WASH-AWAY COMPONENTS & GENERAL PURPOSE SPACERS

DESIGNER	DATE	SIZE	DWG NAME	DWG NO.	REV
DAVID GREEN	10/15/03	A		TO-XXX-XXX	D
CHECKER: M CHEN	DATE: 10/15/03	SCALE 1=1	CAGE CODE 32559	SHEET 3 OF 3	

Компания «ЭлектроПласт» предлагает заключение долгосрочных отношений при поставках импортных электронных компонентов на взаимовыгодных условиях!

Наши преимущества:

- Оперативные поставки широкого спектра электронных компонентов отечественного и импортного производства напрямую от производителей и с крупнейших мировых складов;
- Поставка более 17-ти миллионов наименований электронных компонентов;
- Поставка сложных, дефицитных, либо снятых с производства позиций;
- Оперативные сроки поставки под заказ (от 5 рабочих дней);
- Экспресс доставка в любую точку России;
- Техническая поддержка проекта, помощь в подборе аналогов, поставка прототипов;
- Система менеджмента качества сертифицирована по Международному стандарту ISO 9001;
- Лицензия ФСБ на осуществление работ с использованием сведений, составляющих государственную тайну;
- Поставка специализированных компонентов (Xilinx, Altera, Analog Devices, Intersil, Interpoint, Microsemi, Aeroflex, Peregrine, Syfer, Eurofarad, Texas Instrument, Miteq, Cobham, E2V, MA-COM, Hittite, Mini-Circuits,General Dynamics и др.);

Помимо этого, одним из направлений компании «ЭлектроПласт» является направление «Источники питания». Мы предлагаем Вам помощь Конструкторского отдела:

- Подбор оптимального решения, техническое обоснование при выборе компонента;
- Подбор аналогов;
- Консультации по применению компонента;
- Поставка образцов и прототипов;
- Техническая поддержка проекта;
- Защита от снятия компонента с производства.

Как с нами связаться

Телефон: 8 (812) 309 58 32 (многоканальный)
Факс: 8 (812) 320-02-42
Электронная почта: org@eplast1.ru
Адрес: 198099, г. Санкт-Петербург, ул. Калинина, дом 2, корпус 4, литера А.