FAST CMOS OCTAL TRANSPARENT LATCH

IDT54/74FCT373T/AT/CT

FEATURES:

- **Std., A, and C grades**
- **Low input and output leakage ≤1μA (max.)**
- **CMOS power levels**
- **True TTL input and output compatibility:**
  - *V_{OH} = 3.3V (typ.)*
  - *V_{OL} = 0.3V (typ.)*
- **High Drive outputs (-15mA I_{OH}, 48mA I_{OL})**
- **Meets or exceeds JEDEC standard 18 specifications**
- **Military product compliant to MIL-STD-883, Class B and DESC listed (dual marked)**
- **Power off disable outputs permit "live insertion"**
- **Available in the following packages:**
  - *Industrial: SOIC, SSOP, QSOP*
  - *Military: CERDIP, LCC*

DESCRIPTION:

The FCT373Tis an octal transparent latch built using an advanced dual metal CMOS technology. These octal latches have 3-state outputs and are intended for bus oriented applications. The flip-flops appear transparent to the data when Latch Enable (LE) is high. When LE is low, the data that meets the set-up time is latched. Data appears on the bus when the Output Enable ($\overline{OE}$) is low. When $\overline{OE}$ is high, the bus output is in the high-impedance state.

FUNCTIONAL BLOCK DIAGRAM

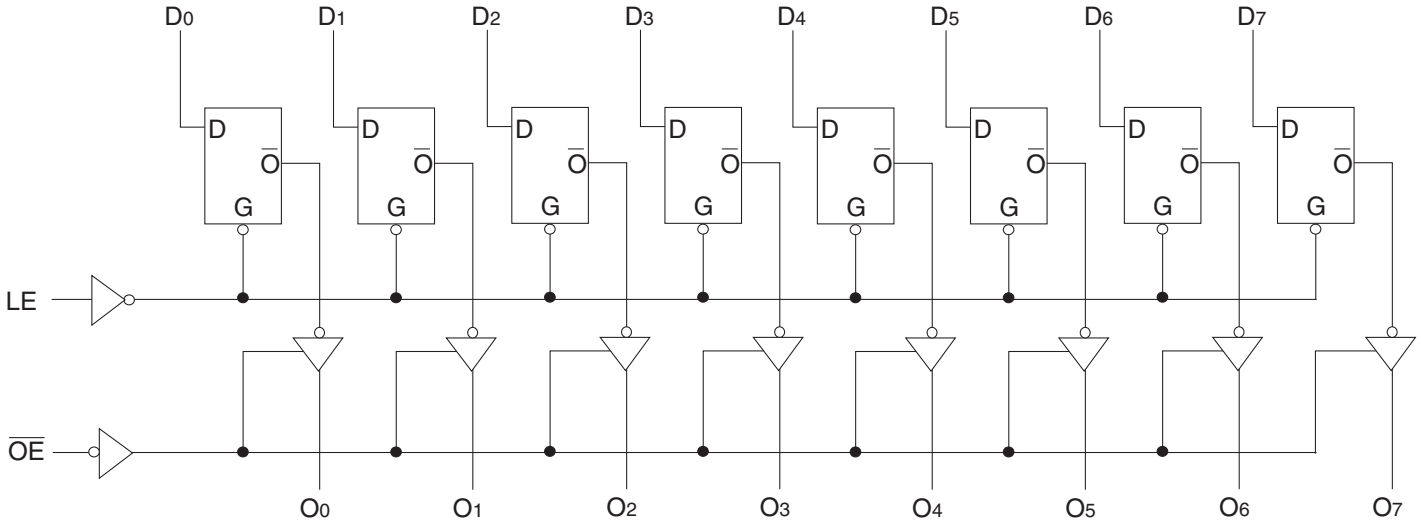

The IDT logo is a registered trademark of Integrated Device Technology, Inc.

© 2009 Integrated Device Technology, Inc.

PIN CONFIGURATION

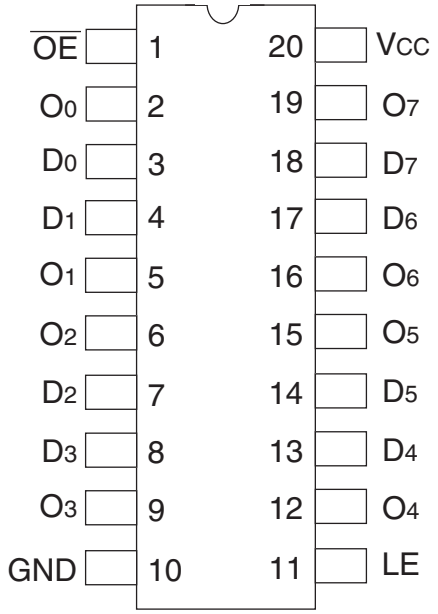

CERDIP/ SOIC/ SSOP/ QSOP
TOP VIEW

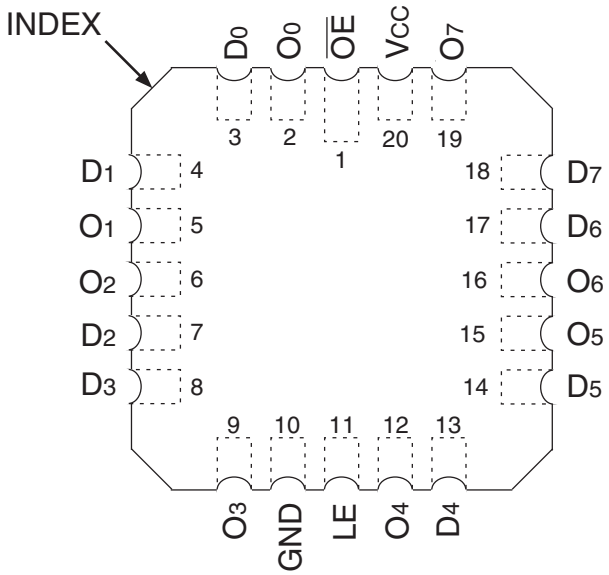

LCC
TOP VIEW

ABSOLUTE MAXIMUM RATINGS(1)

Symbol	Description	Max	Unit
V_{TERM}(2)	Terminal Voltage with Respect to GND	–0.5 to +7	V
V_{TERM}(3)	Terminal Voltage with Respect to GND	–0.5 to V_{CC}+0.5	V
T_{STG}	Storage Temperature	–65 to +150	° C
I_{OUT}	DC Output Current	–60 to +120	mA

NOTES:
1. Stresses greater than those listed under ABSOLUTE MAXIMUM RATINGS may cause permanent damage to the device. This is a stress rating only and functional operation of the device at these or any other conditions above those indicated in the operational sections of this specification is not implied. Exposure to absolute maximum rating conditions for extended periods may affect reliability. No terminal voltage may exceed Vcc by +0.5V unless otherwise noted.
2. Inputs and Vcc terminals only.
3. Output and I/O terminals only.

CAPACITANCE (T_A = +25°C, F = 1.0MHz)

Symbol	Parameter(1)	Conditions	Typ.	Max.	Unit
C_{IN}	Input Capacitance	V_{IN} = 0V	6	10	pF
C_{OUT}	Output Capacitance	V_{OUT} = 0V	8	12	pF

NOTE:
1. This parameter is measured at characterization but not tested.

PIN DESCRIPTION

Pin Names	Description
Dx	Data Inputs
LE	Latch Enable Input (Active HIGH)
$\overline{OE}$	Output Enable Input (Active LOW)
Ox	3-State Outputs

FUNCTION TABLE(1)

Inputs			Outputs
Dx	LE	$\overline{OE}$	Ox
H	H	L	H
L	H	L	L
X	X	H	Z

NOTE:
1. H = HIGH Voltage Level
   X = Don't Care
   L = LOW Voltage Level
   Z = High Impedance

DC ELECTRICAL CHARACTERISTICS OVER OPERATING RANGE

Following Conditions Apply Unless Otherwise Specified:
Industrial: T_A = –40°C to +85°C, V_{CC} = 5.0V ±5%; Military: T_A = –55°C to +125°C, V_{CC} = 5.0V ±10%

Symbol	Parameter	Test Conditions[1]		Min.	Typ.[2]	Max.	Unit
V_{IH}	Input HIGH Level	Guaranteed Logic HIGH Level		2	—	—	V
V_{IL}	Input LOW Level	Guaranteed Logic LOW Level		—	—	0.8	V
I_{IH}	Input HIGH Current[4]	V_{CC} = Max.	V_I = 2.7V	—	—	±1	µA
I_{IL}	Input LOW Current[4]	V_{CC} = Max.	V_I = 0.5V	—	—	±1	µA
I_{OZH}	High Impedance Output Current	V_{CC} = Max	V_O = 2.7V	—	—	±1	µA
I_{OZL}	(3-State output pins)[4]		V_O = 0.5V	—	—	±1	
I_I	Input HIGH Current[4]	V_{CC} = Max., V_I = V_{CC} (Max.)		—	—	±1	µA
V_{IK}	Clamp Diode Voltage	V_{CC} = Min, I_{IN} = -18mA		—	–0.7	–1.2	V
V_H	Input Hysteresis	—		—	200	—	mV
I_{CC}	Quiescent Power Supply Current	V_{CC} = Max., V_{IN} = GND or V_{CC}		—	0.01	1	mA

OUTPUT DRIVE CHARACTERISTICS

Symbol	Parameter	Test Conditions[1]		Min.	Typ.[2]	Max.	Unit
V_{OH}	Output HIGH Voltage	V_{CC} = Min V_{IN} = V_{IH} or V_{IL}	I_{OH} = –6mA MIL I_{OH} = –8mA IND	2.4	3.3	—	V
			I_{OH} = –12mA MIL I_{OH} = –15mA IND	2	3	—	
V_{OL}	Output LOW Voltage	V_{CC} = Min V_{IN} = V_{IH} or V_{IL}	I_{OL} = 32mA MIL I_{OL} = 48mA IND	—	0.3	0.5	V
I_{OS}	Short Circuit Current	V_{CC} = Max., V_O = GND[3]		–60	–120	–225	mA
I_{OFF}	Input/Output Power Off Leakage[5]	V_{CC} = 0V, V_{IN} or V_O ≤ 4.5V		—	—	±1	µA

NOTES:
1. For conditions shown as Min. or Max., use appropriate value specified under Electrical Characteristics for the applicable device type.
2. Typical values are at V_{CC} = 5.0V, +25°C ambient.
3. Not more than one output should be tested at one time. Duration of the test should not exceed one second.
4. The test limit for this parameter is ±5µA at T_A = –55°C.
5. This parameter is guaranteed but not tested.

POWER SUPPLY CHARACTERISTICS

Symbol	Parameter	Test Conditions[1]		Min.	Typ.[2]	Max.	Unit
ΔI_{CC}	Quiescent Power Supply Current TTL Inputs HIGH	V_{CC} = Max. V_{IN} = 3.4V[3]		—	0.5	2	mA
I_{CCD}	Dynamic Power Supply Current[4]	V_{CC} = Max. Outputs Open $\overline{OE}$ = GND One Input Toggling 50% Duty Cycle	V_{IN} = V_{CC} V_{IN} = GND	—	0.15	0.25	mA/ MHz
I_C	Total Power Supply Current[6]	V_{CC} = Max. Outputs Open fi = 10MHz 50% Duty Cycle $\overline{OE}$ = GND LE = V_{CC} One Bit Toggling	V_{IN} = V_{CC} V_{IN} = GND	—	1.5	3.5	mA
			V_{IN} = 3.4V V_{IN} = GND	—	1.8	4.5	
		V_{CC} = Max. Outputs Open fi = 2.5MHz 50% Duty Cycle $\overline{OE}$ = GND LE = V_{CC} Eight Bits Toggling	V_{IN} = V_{CC} V_{IN} = GND	—	3	6[5]	mA
			V_{IN} = 3.4V V_{IN} = GND	—	5	14[5]	

NOTES:

1. For conditions shown as Min. or Max., use appropriate value specified under Electrical Characteristics for the applicable device type.
2. Typical values are at V_{CC} = 5.0V, +25°C ambient.
3. Per TTL driven input; (V_{IN} = 3.4V). All other inputs at V_{CC} or GND.
4. This parameter is not directly testable, but is derived for use in Total Power Supply Calculations.
5. Values for these conditions are examples of ΔI_{CC} formula. These limits are guaranteed but not tested.
6. $I_C = I_{QUIESCENT} + I_{INPUTS} + I_{DYNAMIC}$

   $I_C = I_{CC} + \Delta I_{CC} D_H N_T + I_{CCD} (f_{CP}/2 + f_i N_i)$

   I_{CC} = Quiescent Current

   ΔI_{CC} = Power Supply Current for a TTL High Input (V_{IN} = 3.4V)

   D_H = Duty Cycle for TTL Inputs High

   N_T = Number of TTL Inputs at D_H

   I_{CCD} = Dynamic Current caused by an Input Transition Pair (HLH or LHL)

   f_{CP} = Clock Frequency for Register Devices (Zero for Non-Register Devices)

   f_i = Output Frequency

   N_i = Number of Outputs at f_i

All currents are in milliamps and all frequencies are in megahertz.

SWITCHING CHARACTERISTICS OVER OPERATING RANGE - INDUSTRIAL

Symbol	Parameter	Condition[1]	74FCT373AT		74FCT373CT		Unit
			Min.[2]	Max.	Min.[2]	Max.	
t_{PLH} t_{PHL}	Propagation Delay Dx to Ox	C_L = 50pF R_L = 500Ω	1.5	5.2	1.5	4.2	ns
t_{PLH} t_{PHL}	Propagation Delay LE to Ox		2	8.5	2	5.5	ns
t_{PZH} t_{PZL}	Output Enable Time		1.5	6.5	1.5	5.5	ns
t_{PHZ} t_{PLZ}	Output Disable Time		1.5	5.5	1.5	5	ns
t_{SU}	Set-up Time HIGH or LOW, Dx to LE		2	—	2	—	ns
t_H	Hold Time HIGH or LOW, Dx to LE		1.5	—	1.5	—	ns
t_W	LE Pulse Width HIGH[3]		5	—	5	—	ns

SWITCHING CHARACTERISTICS OVER OPERATING RANGE - MILITARY

Symbol	Parameter	Condition[1]	54FCT373T		54FCT373AT		54FCT373CT		Unit
			Min.[2]	Max.	Min.[2]	Max.	Min.[2]	Max.	
t_{PLH} t_{PHL}	Propagation Delay Dx to Ox	C_L = 50pF R_L = 500Ω	1.5	8.5	1.5	5.6	1.5	5.1	ns
t_{PLH} t_{PHL}	Propagation Delay LE to Ox		2	15	2	9.8	2	8	ns
t_{PZH} t_{PZL}	Output Enable Time		1.5	13.5	1.5	7.5	1.5	6.3	ns
t_{PHZ} t_{PLZ}	Output Disable Time		1.5	10	1.5	6.5	1.5	5.9	ns
t_{SU}	Set-up Time HIGH or LOW, Dx to LE		2	—	2	—	2	—	ns
t_H	Hold Time HIGH or LOW, Dx to LE		1.5	—	1.5	—	1.5	—	ns
t_W	LE Pulse Width HIGH[3]		6	—	6	—	6	—	ns

NOTES:
1. See test circuit and waveforms.
2. Minimum limits are guaranteed but not tested on Propagation Delays.
3. This parameter is guaranteed but not tested.

TEST CIRCUITS AND WAVEFORMS

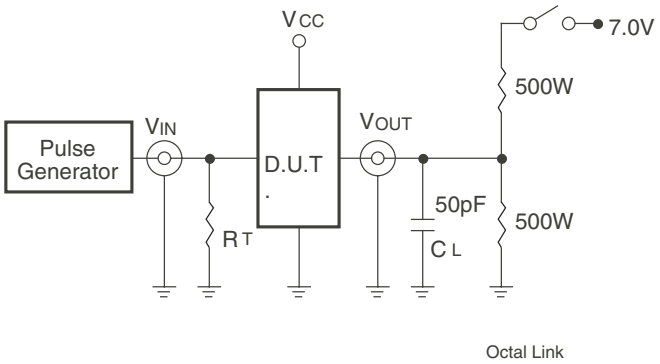

Test Circuits for All Outputs

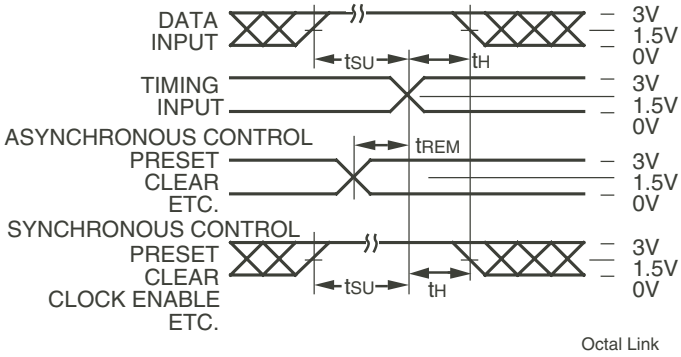

Set-Up, Hold, and Release Times

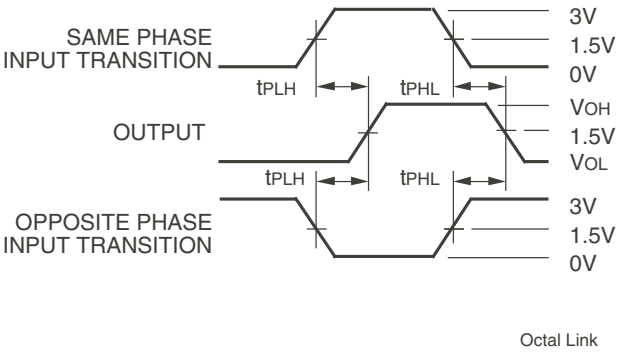

Propagation Delay

SWITCH POSITION

Test	Switch
Open Drain Disable Low Enable Low	Closed
All Other Tests	Open

DEFINITIONS:

C_L = Load capacitance: includes jig and probe capacitance.

R_T = Termination resistance: should be equal to Z_{OUT} of the Pulse Generator.

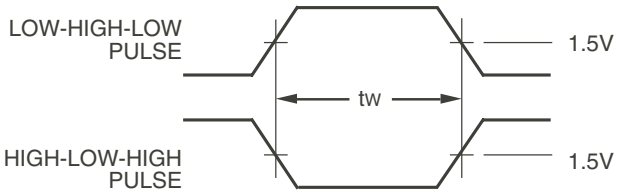

Pulse Width

Octal Link

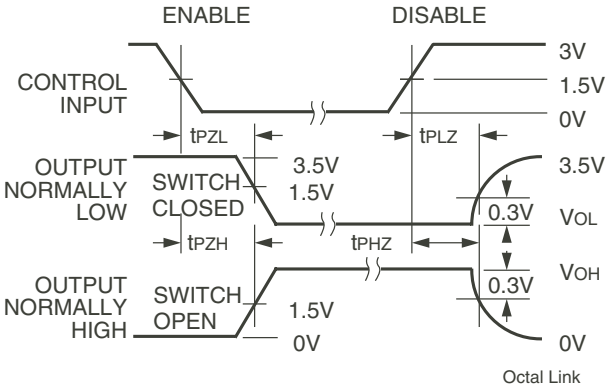

Enable and Disable Times

NOTES:

1. Diagram shown for input Control Enable-LOW and input Control Disable-HIGH.
2. Pulse Generator for All Pulses: Rate ≤ 1.0MHz; t_F ≤ 2.5ns; t_R ≤ 2.5ns.

ORDERING INFORMATION

XX FCT XXXX XX X

Temp. Range | Device Type | Package | Process

Process:
- Blank — Industrial
- B — MIL-STD-883, Class B

Package:

Industrial Options
- SOG — Small Outline IC - Green
- PYG — Shrink Small Outline Package - Green
- QG — Quarter-size Small Outline Package - Green

Military Options
- D — CERDIP
- L — Leadless Chip Carrier

Device Type:
- 373T, 373AT, 373CT — Fast CMOS Octal Transparent Latch

Temp. Range:
- 54 — 55 C to +125 C
- 74 — 40 C to +85 C

Datasheet Document History

10/03/09 Pg. 7 Updated the ordering information by removing the "IDT" notation and non RoHS part.

CORPORATE HEADQUARTERS
6024 Silver Creek Valley Road
San Jose, CA 95138

for SALES:
800-345-7015 or 408-284-8200
fax: 408-284-2775
www.idt.com

for Tech Support:
logichelp@idt.com

Компания «ЭлектроПласт» предлагает заключение долгосрочных отношений при поставках импортных электронных компонентов на взаимовыгодных условиях!

Наши преимущества:

- Оперативные поставки широкого спектра электронных компонентов отечественного и импортного производства напрямую от производителей и с крупнейших мировых складов;
- Поставка более 17-ти миллионов наименований электронных компонентов;
- Поставка сложных, дефицитных, либо снятых с производства позиций;
- Оперативные сроки поставки под заказ (от 5 рабочих дней);
- Экспресс доставка в любую точку России;
- Техническая поддержка проекта, помощь в подборе аналогов, поставка прототипов;
- Система менеджмента качества сертифицирована по Международному стандарту ISO 9001;
- Лицензия ФСБ на осуществление работ с использованием сведений, составляющих государственную тайну;
- Поставка специализированных компонентов (Xilinx, Altera, Analog Devices, Intersil, Interpoint, Microsemi, Aeroflex, Peregrine, Syfer, Eurofarad, Texas Instrument, Miteq, Cobham, E2V, MA-COM, Hittite, Mini-Circuits,General Dynamics и др.);

Помимо этого, одним из направлений компании «ЭлектроПласт» является направление «Источники питания». Мы предлагаем Вам помощь Конструкторского отдела:

- Подбор оптимального решения, техническое обоснование при выборе компонента;
- Подбор аналогов;
- Консультации по применению компонента;
- Поставка образцов и прототипов;
- Техническая поддержка проекта;
- Защита от снятия компонента с производства.

Как с нами связаться

Телефон: 8 (812) 309 58 32 (многоканальный)
Факс: 8 (812) 320-02-42
Электронная почта: org@eplast1.ru
Адрес: 198099, г. Санкт-Петербург, ул. Калинина, дом 2, корпус 4, литера А.