International
IOR Rectifier

# IRGS4064DPbF

INSULATED GATE BIPOLAR TRANSISTOR WITH ULTRAFAST SOFT RECOVERY DIODE

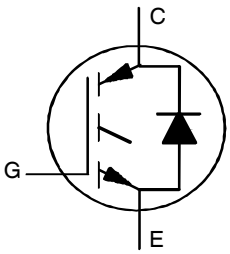


n-channel

$V_{CES}$ = 600V

$I_C$ = 10A, $T_C$ = 100°C

$t_{sc}$ > 5µs, $T_{jmax}$ = 175°C

$V_{CE(on)\ typ.}$ = 1.6V

## Features

- Low $V_{CE\ (on)}$ Trench IGBT Technology
- Low Switching Losses
- Maximum Junction temperature 175 °C
- 5µs SCSOA
- Square RBSOA
- 100% of The Parts Tested for ($I_{LM}$)
- Positive $V_{CE\ (on)}$ Temperature Coefficient.
- Ultra Fast Soft Recovery Co-pak Diode
- Tighter Distribution of Parameters
- Lead-Free Package

## Benefits

- High Efficiency in a Wide Range of Applications
- Suitable for a Wide Range of Switching Frequencies due to Low $V_{CE\ (ON)}$ and Low Switching Losses
- Rugged Transient Performance for Increased Reliability
- Excellent Current Sharing in Parallel Operation
- Low EMI

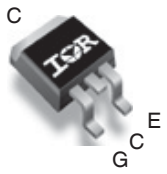


D²Pak

| G | C | E |
|---|---|---|
| Gate | Collector | Emitter |

## Absolute Maximum Ratings

| | Parameter | Max. | Units |
|---|---|---|---|
| $V_{CES}$ | Collector-to-Emitter Breakdown Voltage | 600 | V |
| $I_C$@ $T_C$ = 25°C | Continuous Collector Current | 20 | A |
| $I_C$@ $T_C$ = 100°C | Continuous Collector Current | 10 | |
| $I_{CM}$ | Pulsed Collector Current | 40 | |
| $I_{LM}$ | Clamped Inductive Load Current ① | 40 | |
| $I_F$@$T_C$=25°C | Diode Continuous Forward Current | 20 | |
| $I_F$@$T_C$=100°C | Diode Continuous Forward Current | 10 | |
| $I_{FM}$ | Diode Maximum Forward Current ② | 40 | |
| $V_{GE}$ | Continuous Gate-to-Emitter Voltage | ±20 | V |
| | Transient Gate-to-Emitter Voltage | ±30 | |
| $P_D$ @ $T_C$ =25° | Maximum Power Dissipation | 101 | W |
| $P_D$ @ $T_C$ =100° | Maximum Power Dissipation | 50 | |
| $T_J$<br>$T_{STG}$ | Operating Junction and<br>Storage Temperature Range | -55 to + 175 | °C |
| | Soldering Temperature, for 10 seconds | 300 (0.063 in. (1.6mm) from case) | |

## Thermal Resistance

| | Parameter | Min. | Typ. | Max. | Units |
|---|---|---|---|---|---|
| $R_{\theta JC}$ | Junction-to-Case - IGBT ③ | ––– | ––– | 1.49 | °C/W |
| $R_{\theta JC}$ | Junction-to-Case - Diode ③ | ––– | ––– | 3.66 | |
| $R_{\theta CS}$ | Case-to-Sink, flat, greased surface | ––– | 0.50 | ––– | |
| $R_{\theta JA}$ | Junction-to-Ambient, typical socket mount ③ | ––– | ––– | 40 | |
| Wt | Weight | | 1.5 | | g |



02/16/12

**Electrical Characteristics @ $T_J$ = 25°C (unless otherwise specified)**

| | Parameter | Min. | Typ. | Max. | Units | Conditions | Ref.Fig |
|---|---|---|---|---|---|---|---|
| $V_{(BR)CES}$ | Collector-to-Emitter Breakdown Voltage | 600 | — | — | V | $V_{GE}$ = 0V, $I_C$ = 100µA ④ | CT 6 |
| $\Delta V_{(BR)CES}/\Delta T_J$ | Temperature Coeff. of Breakdown Voltage | — | 0.47 | — | V/°C | $V_{GE}$ = 0V, $I_C$ = 500µA (25°C-175°C) | |
| $V_{CE(on)}$ | Collector-to-Emitter Saturation Voltage | — | 1.6 | 1.91 | V | $I_C$ = 10A, $V_{GE}$ = 15V, $T_J$ = 25°C | |
| | | — | 1.9 | — | | $I_C$ = 10A, $V_{GE}$ = 15V, $T_J$ = 150°C | 5,6,7,9, |
| | | — | 2.0 | — | | $I_C$ = 10A, $V_{GE}$ = 15V, $T_J$ = 175°C | 10 ,11 |
| $V_{GE(th)}$ | Gate Threshold Voltage | 4.0 | — | 6.5 | V | $V_{CE}$ = $V_{GE}$, $I_C$ = 275µA | 9,10,11,12 |
| $\Delta V_{GE(th)}/\Delta TJ$ | Threshold Voltage temp. coefficient | — | -11 | — | mV/°C | $V_{CE}$ = $V_{GE}$, $I_C$ = 1.0mA (25°C - 175°C) | |
| gfe | Forward Transconductance | — | 6.9 | — | S | $V_{CE}$ = 50V, $I_C$ = 10A, PW = 80µs | |
| $I_{CES}$ | Collector-to-Emitter Leakage Current | — | — | 25 | µA | $V_{GE}$ = 0V, $V_{CE}$ = 600V | |
| | | — | 328 | — | | $V_{GE}$ = 0V, $V_{CE}$ = 600V, $T_J$ = 175°C | 8 |
| $V_{FM}$ | Diode Forward Voltage Drop | — | 2.5 | 3.1 | V | $I_F$ = 10A | |
| | | — | 1.7 | — | | $I_F$ = 10A, $T_J$ = 175°C | |
| $I_{GES}$ | Gate-to-Emitter Leakage Current | — | — | ±100 | nA | $V_{GE}$ = ±20V | |

**Switching Characteristics @ $T_J$ = 25°C (unless otherwise specified)**

| | Parameter | Min. | Typ. | Max.⑤ | Units | Conditions | Ref.Fig |
|---|---|---|---|---|---|---|---|
| $Q_g$ | Total Gate Charge (turn-on) | — | 21 | 32 | | $I_C$ = 10A | 24 |
| $Q_{ge}$ | Gate-to-Emitter Charge (turn-on) | — | 5.3 | 8.0 | nC | $V_{GE}$ = 15V | CT 1 |
| $Q_{gc}$ | Gate-to-Collector Charge (turn-on) | — | 8.9 | 13 | | $V_{CC}$ = 400V | |
| $E_{on}$ | Turn-On Switching Loss | — | 29 | 40 | | $I_C$ = 10A, $V_{CC}$ = 400V, $V_{GE}$ = 15V | |
| $E_{off}$ | Turn-Off Switching Loss | — | 200 | 281 | µJ | $R_G$ = 22Ω, L = 1.0mH, $T_J$ = 25°C | CT 4 |
| $E_{total}$ | Total Switching Loss | — | 229 | 313 | | Energy losses include tail & diode reverse recovery | |
| $t_{d(on)}$ | Turn-On delay time | — | 27 | 37 | | $I_C$ = 10A, $V_{CC}$ = 400V, $V_{GE}$ = 15V | |
| $t_r$ | Rise time | — | 15 | 23 | ns | $R_G$ = 22Ω, L = 1.0mH, $T_J$ = 25°C | CT 4 |
| $t_{d(off)}$ | Turn-Off delay time | — | 79 | 90 | | | |
| $t_f$ | Fall time | — | 21 | 29 | | | |
| $E_{on}$ | Turn-On Switching Loss | — | 99 | — | | $I_C$ = 10A, $V_{CC}$ = 400V, $V_{GE}$ = 15V | 13,15 |
| $E_{off}$ | Turn-Off Switching Loss | — | 316 | — | µJ | $R_G$=22Ω, L=1.0mH, $T_J$ = 175°C ④ | CT 4 |
| $E_{total}$ | Total Switching Loss | — | 415 | — | | Energy losses include tail & diode reverse recovery | WF 1,WF 2 |
| $t_{d(on)}$ | Turn-On delay time | — | 27 | — | | $I_C$ = 10A, $V_{CC}$ = 400V, $V_{GE}$ = 15V | 14,16 |
| $t_r$ | Rise time | — | 16 | — | ns | $R_G$ = 22Ω, L = 1.0mH, $T_J$ = 175°C | CT 4 |
| $t_{d(off)}$ | Turn-Off delay time | — | 98 | — | | | WF 1,WF 2 |
| $t_f$ | Fall time | — | 33 | — | | | |
| $C_{ies}$ | Input Capacitance | — | 594 | — | pF | $V_{GE}$ = 0V | 22 |
| $C_{oes}$ | Output Capacitance | — | 49 | — | | $V_{CC}$ = 30V | |
| $C_{res}$ | Reverse Transfer Capacitance | — | 17 | — | | f = 1.0Mhz | |
| RBSOA | Reverse Bias Safe Operating Area | FULL SQUARE | | | | $T_J$ = 175°C, $I_C$ = 40A<br>$V_{CC}$ = 480V, Vp =600V<br>Rg = 22Ω, $V_{GE}$ = +15V to 0V | 4<br>CT 2 |
| SCSOA | Short Circuit Safe Operating Area | 5 | — | — | µs | $V_{CC}$ = 400V, Vp =600V<br>Rg = 22Ω, $V_{GE}$ = +15V to 0V | 22, CT 3<br>WF 4 |
| Erec | Reverse Recovery Energy of the Diode | — | 191 | — | µJ | $T_J$ = 175°C | 17,18,19 |
| $t_{rr}$ | Diode Reverse Recovery Time | — | 62 | — | ns | $V_{CC}$ = 400V, $I_F$ = 10A | 20,21 |
| $I_{rr}$ | Peak Reverse Recovery Current | — | 16 | — | A | $V_{GE}$ = 15V, Rg = 22Ω, L=1.0mH | WF 3 |

Notes:

① $V_{CC}$ = 80% ($V_{CES}$), $V_{GE}$ = 15V, L = 28 µH, $R_G$ = 22 Ω.
② Pulse width limited by max. junction temperature.
③ $R_\theta$ is measured at $T_J$ approximately 90°C
④ Refer to AN-1086 for guidelines for measuring $V_{(BR)CES}$ safely
⑤ Maximum limits are based on statistical sample size characterization

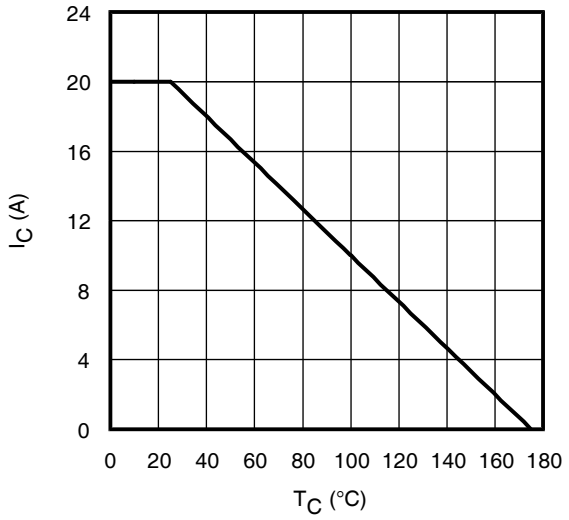


**Fig. 1** - Maximum DC Collector Current vs. Case Temperature

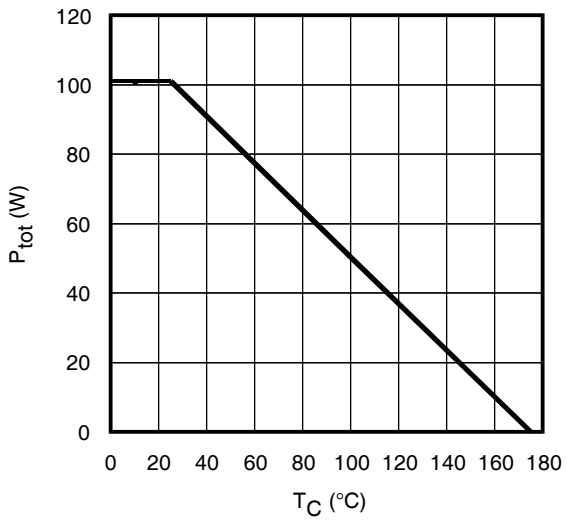


**Fig. 2** - Power Dissipation vs. Case Temperature

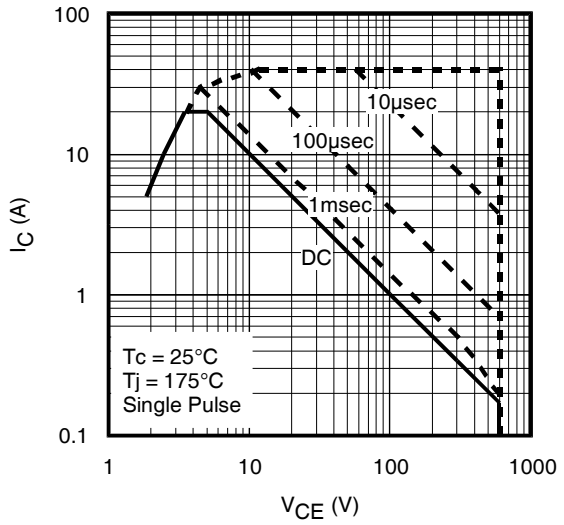


**Fig. 3** - Forward SOA, $T_C = 25°C$; $T_J \leq 175°C$

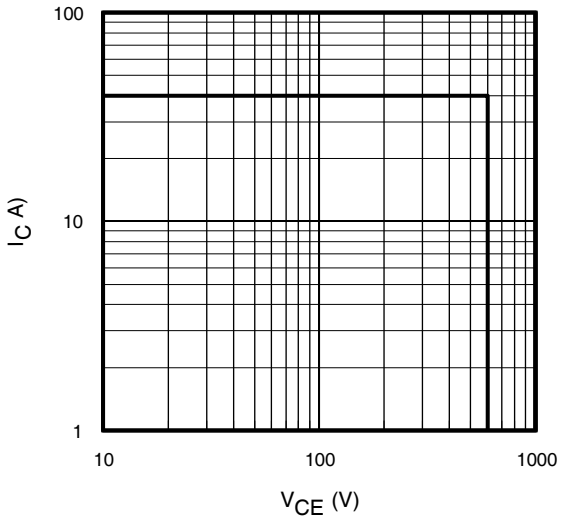


**Fig. 4** - Reverse Bias SOA $T_J = 175°C$; $V_{CE} = 15V$

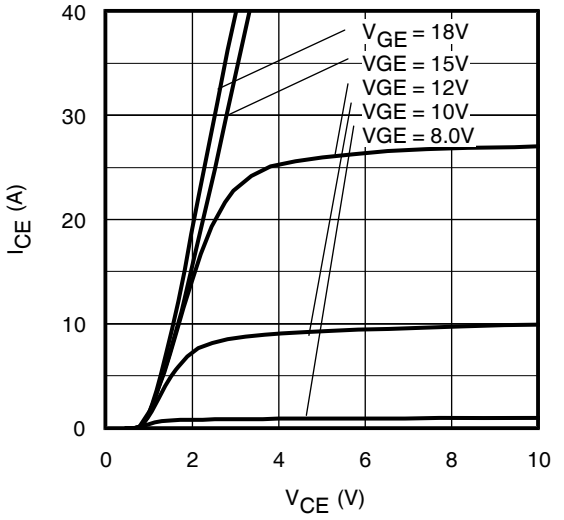


**Fig. 5** - Typ. IGBT Output Characteristics $T_J = -40°C$; tp = 80µs

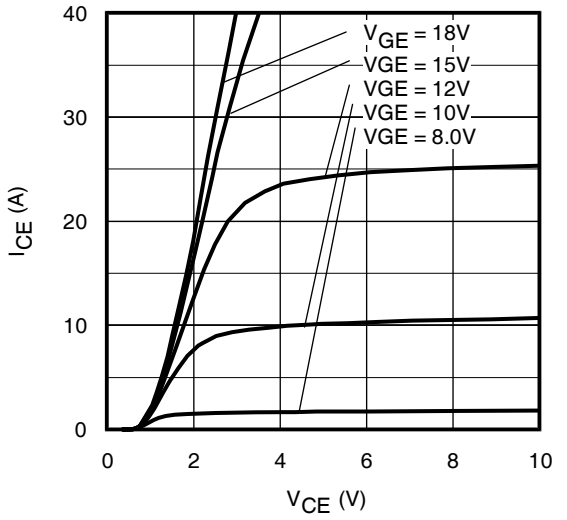


**Fig. 6** - Typ. IGBT Output Characteristics $T_J = 25°C$; tp = 80µs

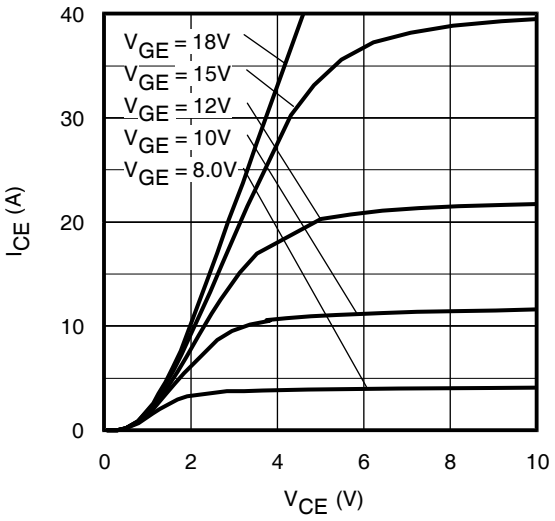


**Fig. 7** - Typ. IGBT Output Characteristics
$T_J$ = 175°C; tp = 80µs

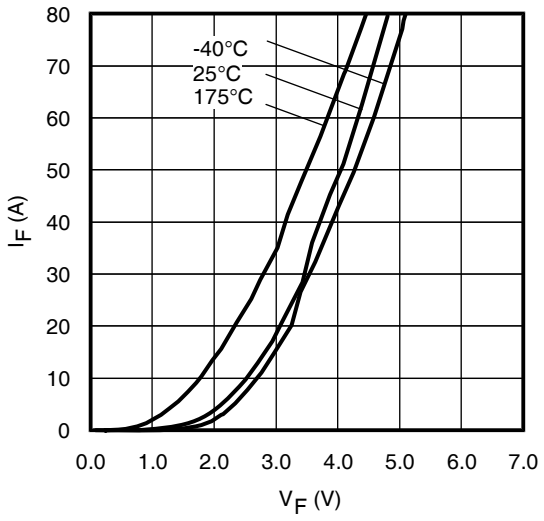


**Fig. 8** - Typ. Diode Forward Characteristics
tp = 80µs

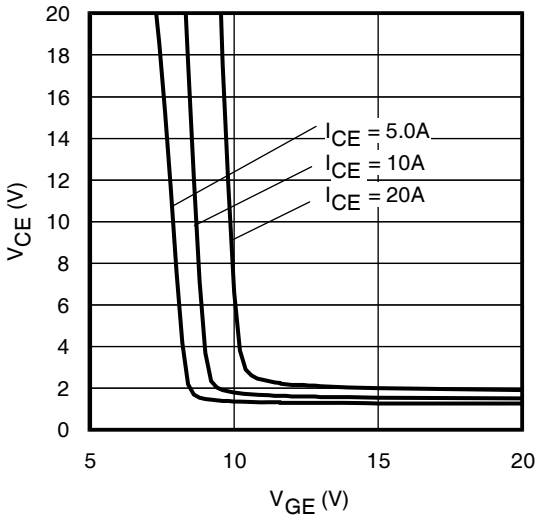


**Fig. 9** - Typical $V_{CE}$ vs. $V_{GE}$
$T_J$ = -40°C

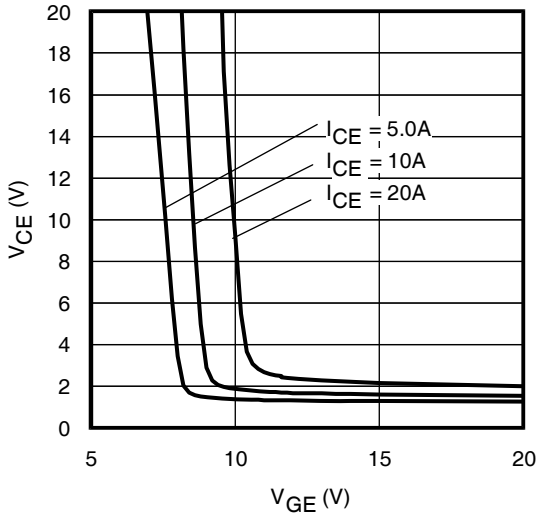


**Fig. 10** - Typical $V_{CE}$ vs. $V_{GE}$
$T_J$ = 25°C

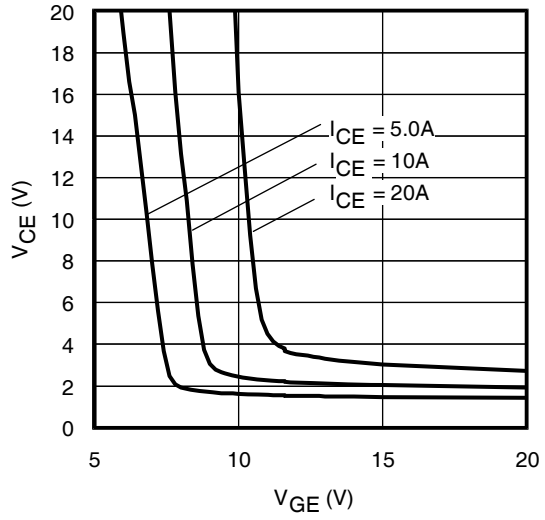


**Fig. 11** - Typical $V_{CE}$ vs. $V_{GE}$
$T_J$ = 175°C

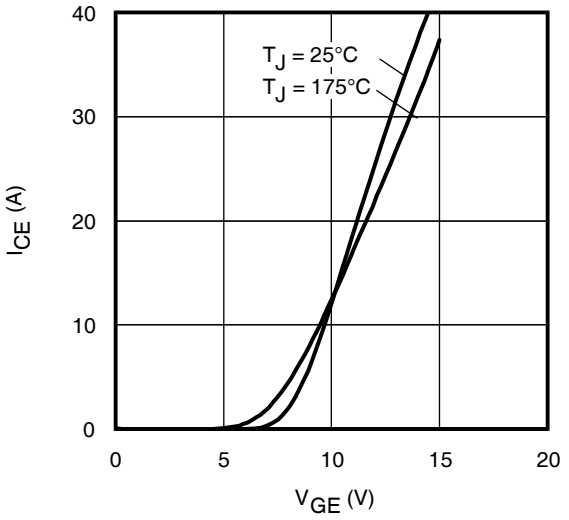


**Fig. 12** - Typ. Transfer Characteristics
$V_{CE}$ = 50V; tp = 10µs

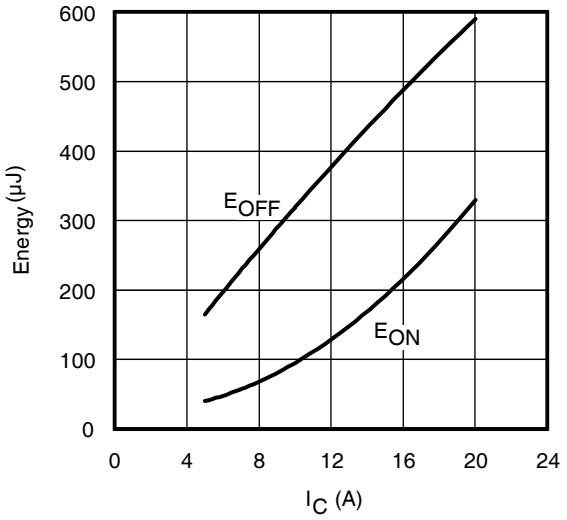


**Fig. 13** - Typ. Energy Loss vs. $I_C$
$T_J$ = 175°C; L = 1mH; $V_{CE}$ = 400V, $R_G$ = 22Ω; $V_{GE}$ = 15V.

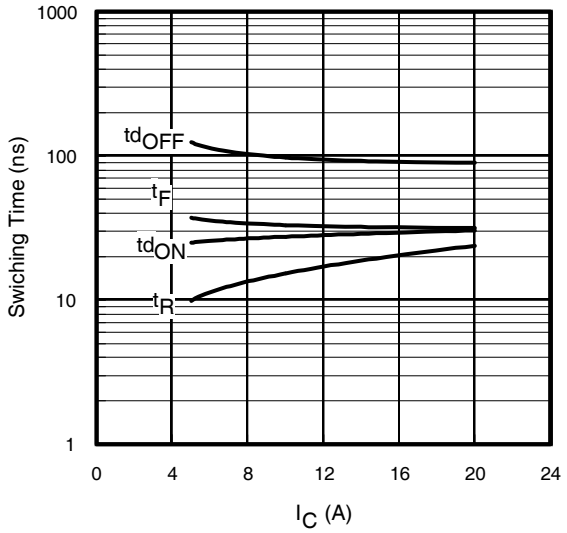


**Fig. 14** - Typ. Switching Time vs. $I_C$
$T_J$ = 175°C; L=1mH; $V_{CE}$= 400V
$R_G$= 22Ω; $V_{GE}$= 15V

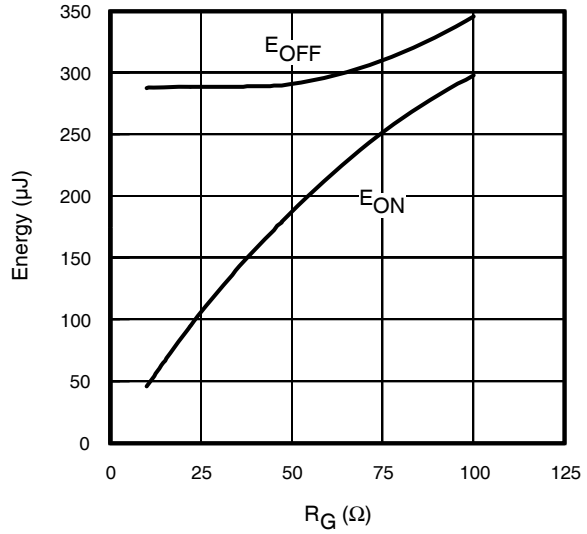


**Fig. 15** - Typ. Energy Loss vs. $R_G$
$T_J$ = 175°C; L = 1mH; $V_{CE}$ = 400V, $I_{CE}$ = 10A; $V_{GE}$ = 15V

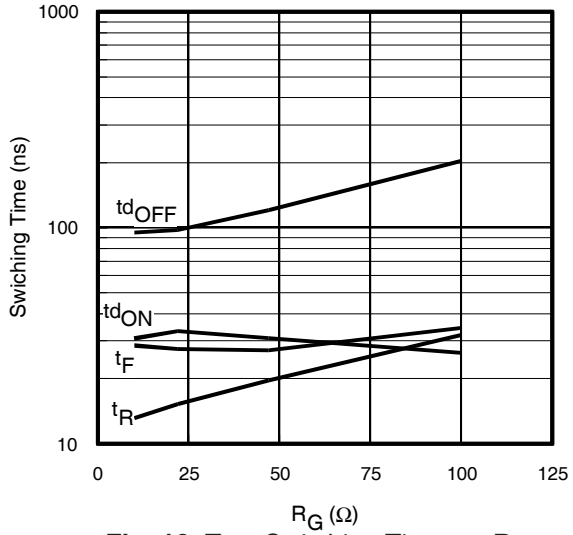


**Fig. 16**- Typ. Switching Time vs. $R_G$
$T_J$ = 175°C; L=1mH; $V_{CE}$= 400V
$I_{CE}$= 10A; $V_{GE}$= 15V

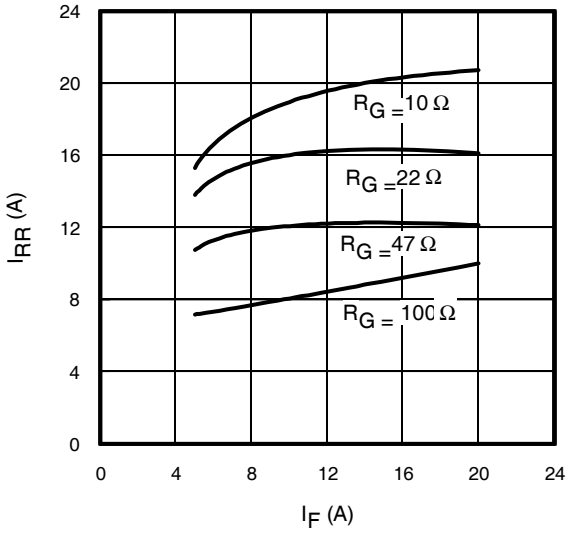


**Fig. 17** - Typical Diode $I_{RR}$ vs. $I_F$
$T_J$ = 175°C

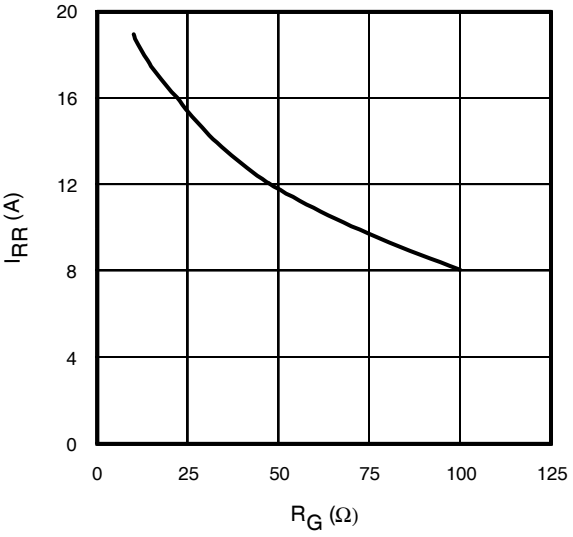


**Fig. 18** - Typical Diode $I_{RR}$ vs. $R_G$
$T_J$ = 175°C; $I_F$ = 10A

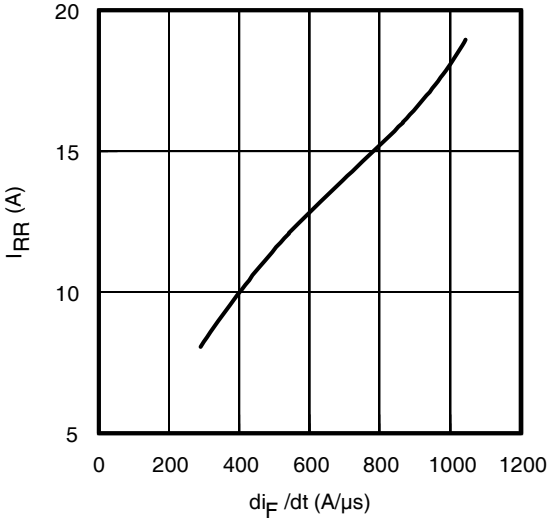


**Fig. 19**- Typical Diode $I_{RR}$ vs. $di_F/dt$
$V_{CC}$= 400V; $V_{GE}$= 15V;
$I_{CE}$= 10A; $T_J$ = 175°C

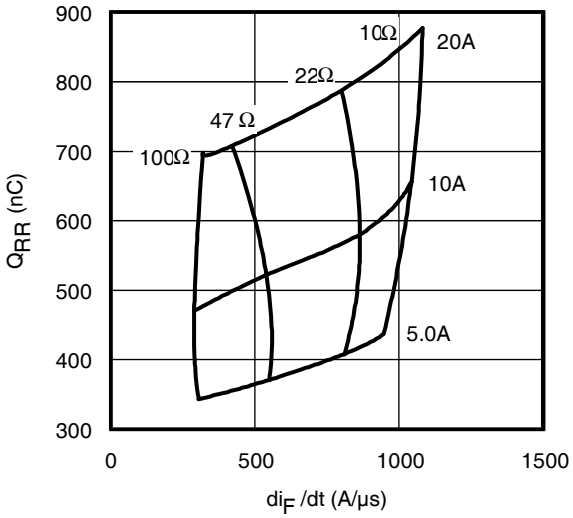


**Fig. 20** - Typical Diode $Q_{RR}$
$V_{CC}$= 400V; $V_{GE}$= 15V; $T_J$ = 175°C

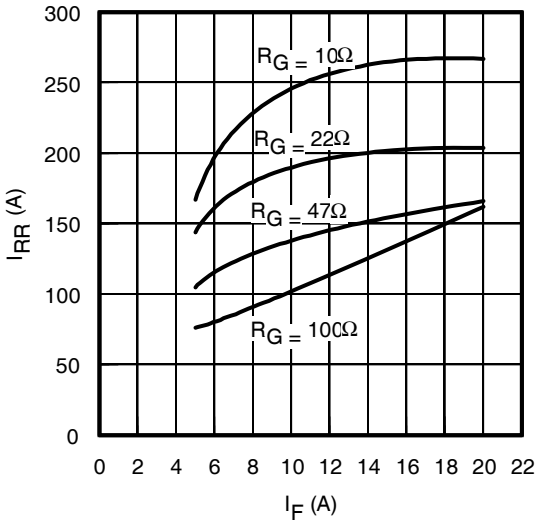


**Fig. 21** - Typical Diode $E_{RR}$ vs. $I_F$
$T_J$ = 175°C

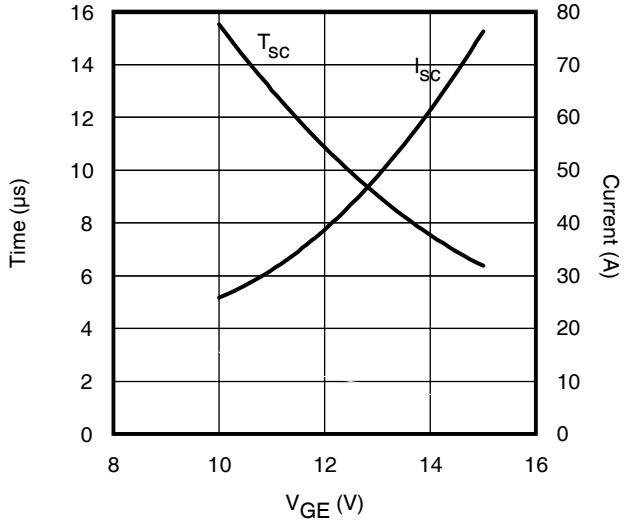


**Fig. 22**- Typ. $V_{GE}$ vs Short Circuit Time
$V_{CC}$=400V, $T_C$ =25°C

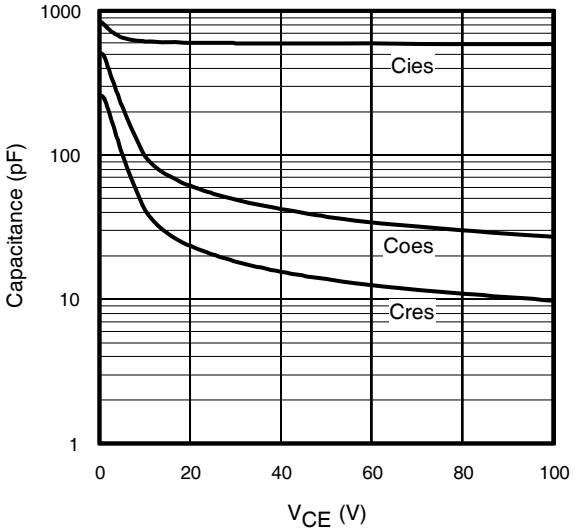


**Fig. 23**- Typ. Capacitance vs. $V_{CE}$
$V_{GE}$= 0V; f = 1MHz

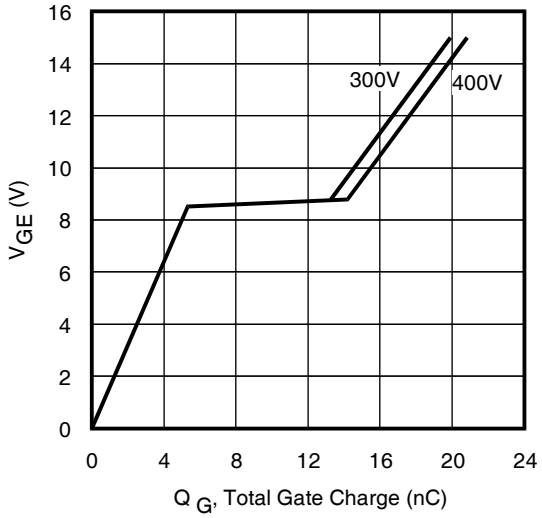


**Fig. 24** - Typical Gate Charge vs. $V_{GE}$
$I_{CE}$ = 10A, L=600µH

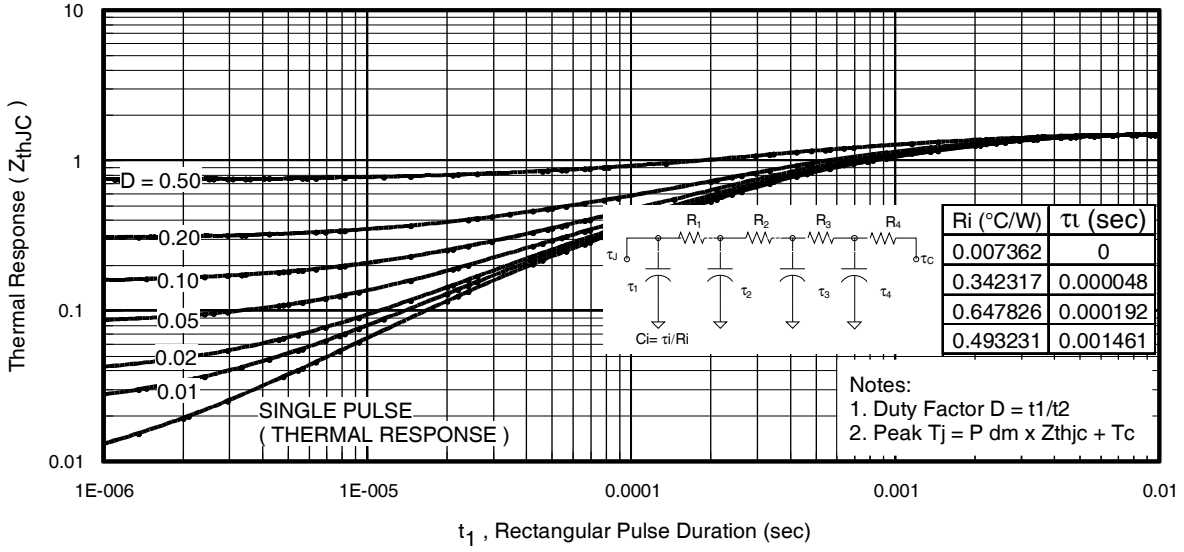


**Fig 25.** Maximum Transient Thermal Impedance, Junction-to-Case (IGBT)

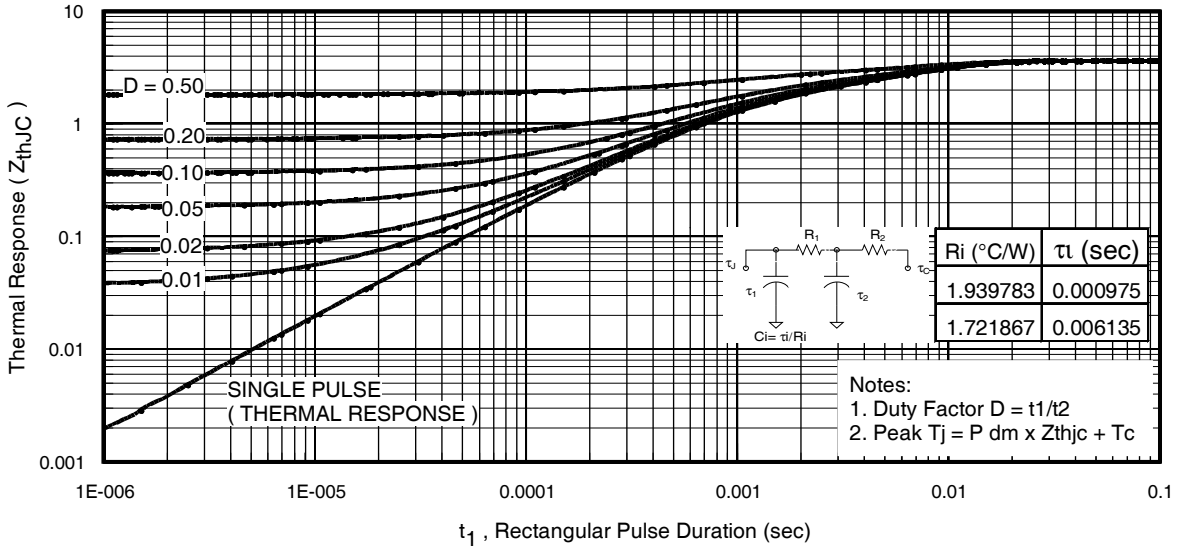


**Fig. 26.** Maximum Transient Thermal Impedance, Junction-to-Case (DIODE)

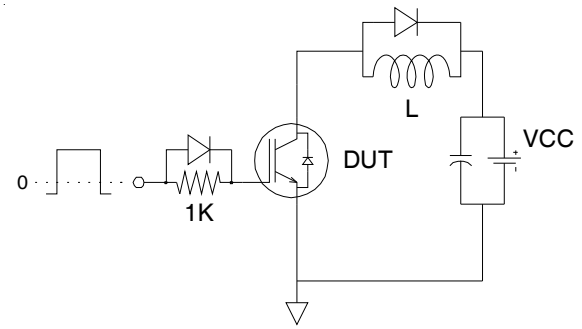


**Fig.C.T.1** - Gate Charge Circuit (turn-off)

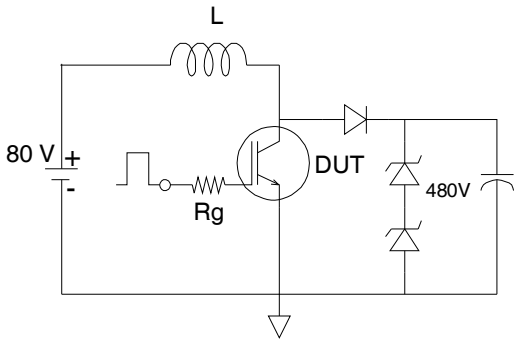


**Fig.C.T.2** - RBSOA Circuit

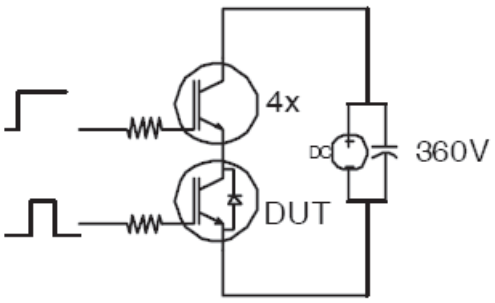


**Fig.C.T.3** - S.C.SOA Circuit

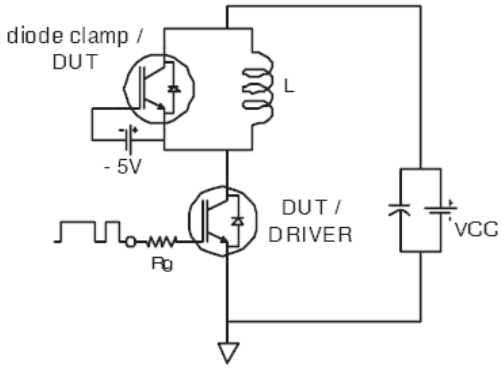


**Fig.C.T.4** - Switching Loss Circuit

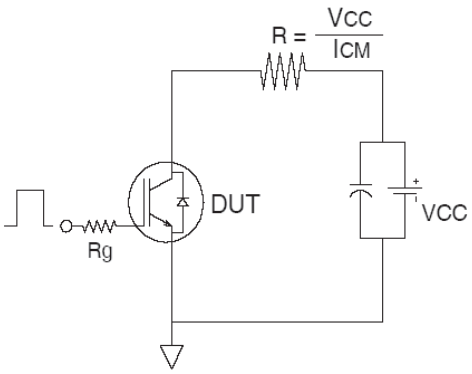


**Fig.C.T.5** - Resistive Load Circuit

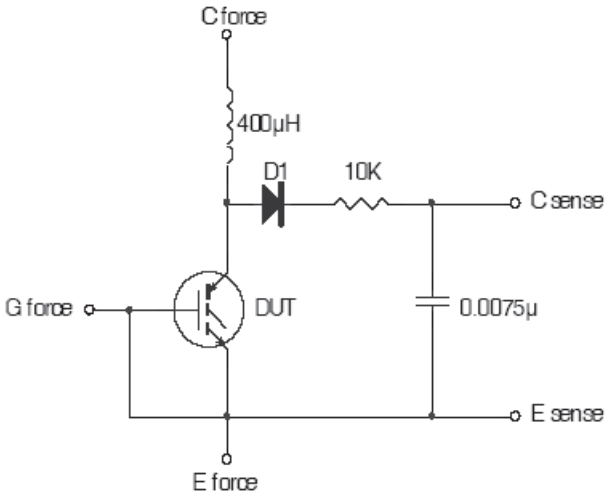


**Fig.C.T.6** - Typical Filter Circuit for $V_{(BR)CES}$ Measurement

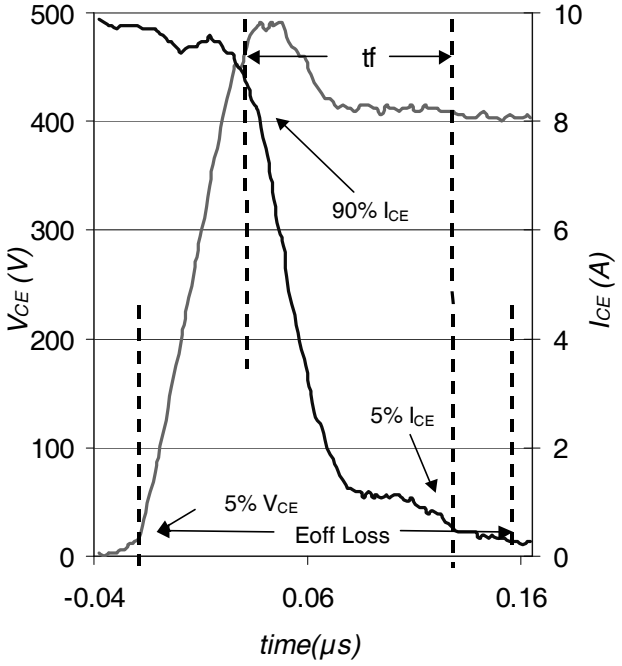


**Fig. WF1** - Typ. Turn-off Loss Waveform
@ $T_J$ = 175°C using Fig. CT.4

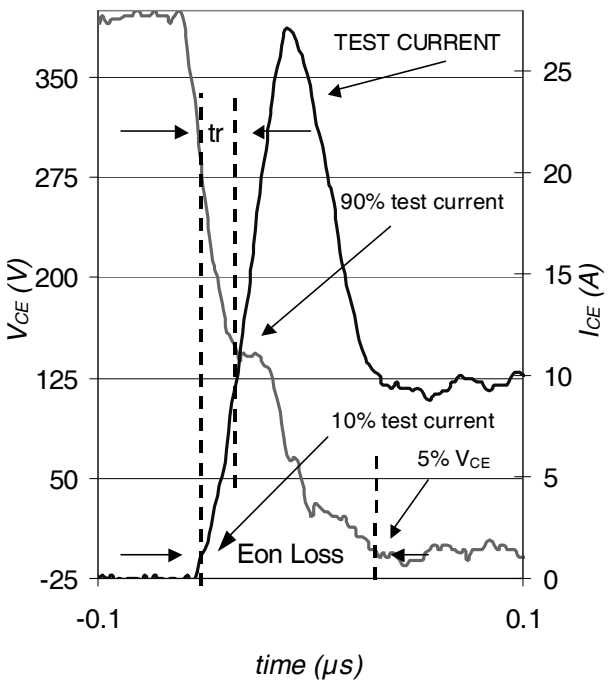


**Fig. WF2** - Typ. Turn-on Loss Waveform
@ $T_J$ = 175°C using Fig. CT.4

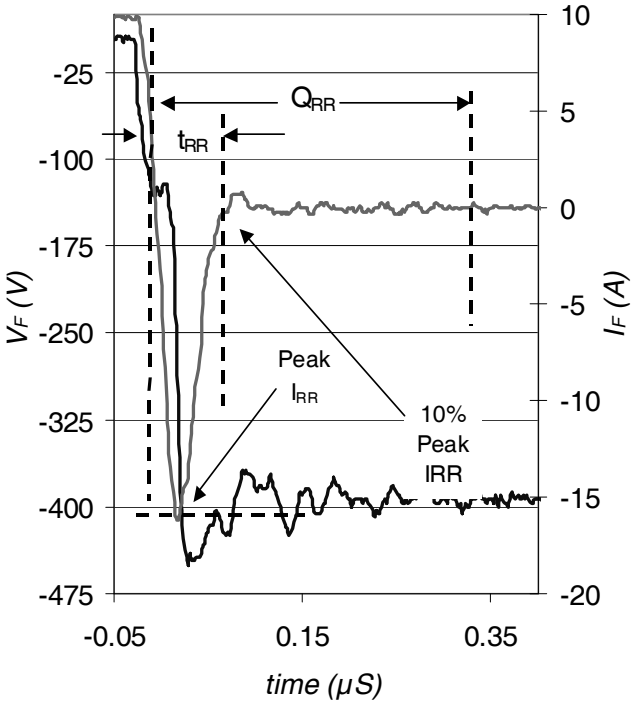


WF.3- Typ. Reverse Recovery Waveform
@ $T_J$ = 175°C using CT.4

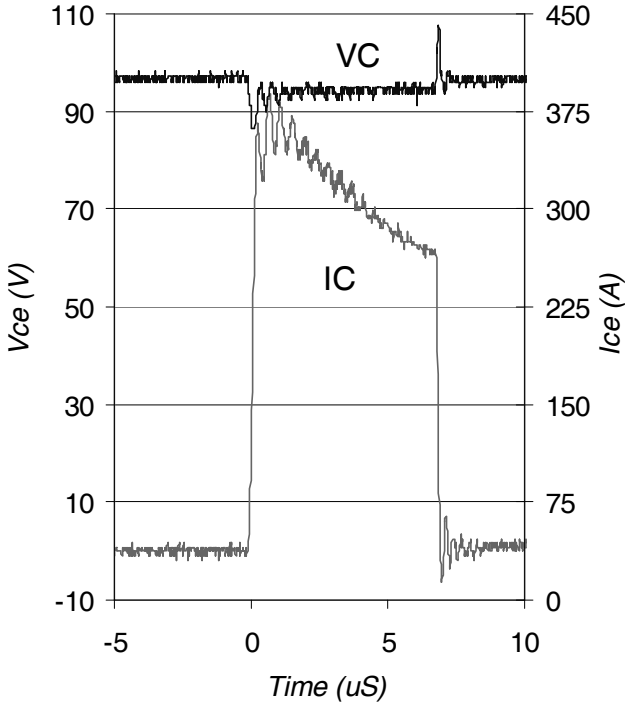


WF.4- Typ. Short Circuit Waveform
@ $T_J$ = 25°C using CT.3

## D²Pak Package Outline (Dimensions are shown in millimeters (inches))

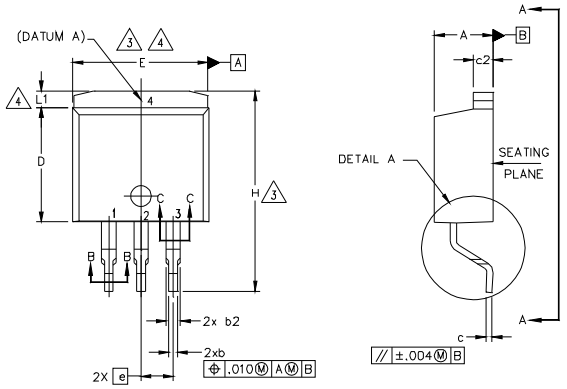


NOTES:

1. DIMENSIONING AND TOLERANCING PER ASME Y14.5M-1994
2. DIMENSIONS ARE SHOWN IN MILLIMETERS [INCHES].
3. DIMENSION D & E DO NOT INCLUDE MOLD FLASH. MOLD FLASH SHALL NOT EXCEED 0.127 [.005"] PER SIDE. THESE DIMENSIONS ARE MEASURED AT THE OUTMOST EXTREMES OF THE PLASTIC BODY AT DATUM H.
4. THERMAL PAD CONTOUR OPTIONAL WITHIN DIMENSION E, L1, D1 & E1.
5. DIMENSION b1 AND c1 APPLY TO BASE METAL ONLY.
6. DATUM A & B TO BE DETERMINED AT DATUM PLANE H.
7. CONTROLLING DIMENSION: INCH.
8. OUTLINE CONFORMS TO JEDEC OUTLINE TO-263AB.

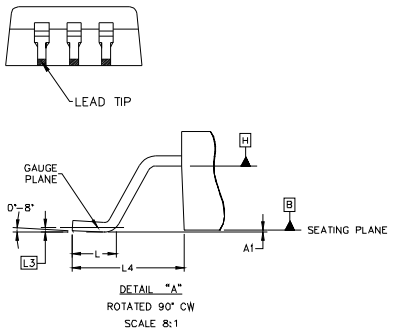


| SYMBOL | DIMENSIONS | | | | NOTES |
|---|---|---|---|---|---|
| | MILLIMETERS | | INCHES | | |
| | MIN. | MAX. | MIN. | MAX. | |
| A | 4.06 | 4.83 | .160 | .190 | |
| A1 | – | 0.254 | – | .010 | |
| b | 0.51 | 0.99 | .020 | .039 | |
| b1 | 0.51 | 0.89 | .020 | .035 | 5 |
| b2 | 1.14 | 1.78 | .045 | .070 | |
| b3 | 1.14 | 1.73 | .045 | .068 | 5 |
| c | 0.38 | 0.74 | .015 | .029 | |
| c1 | 0.38 | 0.58 | .015 | .023 | 5 |
| c2 | 1.14 | 1.65 | .045 | .065 | |
| D | 8.38 | 9.65 | .330 | .380 | 3 |
| D1 | 6.86 | – | .270 | | 4 |
| E | 9.65 | 10.67 | .380 | .420 | 3,4 |
| E1 | 6.22 | – | .245 | | 4 |
| e | 2.54 BSC | | .100 BSC | | |
| H | 14.61 | 15.88 | .575 | .625 | |
| L | 1.78 | 2.79 | .070 | .110 | |
| L1 | – | 1.65 | – | .066 | 4 |
| L3 | 0.25 BSC | | .010 BSC | | |
| L4 | 4.78 | 5.28 | .188 | .208 | |

LEAD ASSIGNMENTS

HEXFET

1.- GATE
2, 4.- DRAIN
3.- SOURCE

IGBTs, CoPACK

1.- GATE
2, 4.- COLLECTOR
3.- EMITTER

DIODES

1.- ANODE *
2, 4.- CATHODE
3.- ANODE

* PART DEPENDENT.

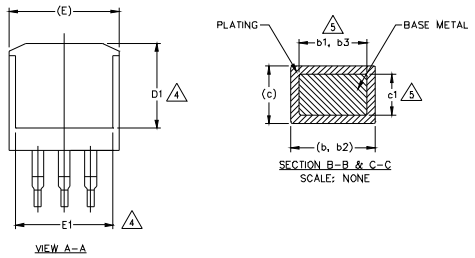


## D²Pak Part Marking Information

EXAMPLE: THIS IS AN IRF530S WITH LOT CODE 8024
ASSEMBLED ON WW 02, 2000
IN THE ASSEMBLY LINE "L"

Note: "P" in assembly line position indicates "Lead - Free"

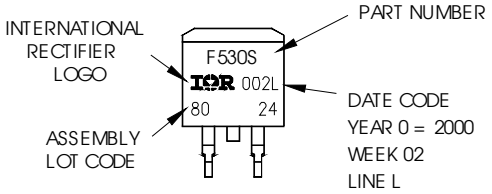


OR

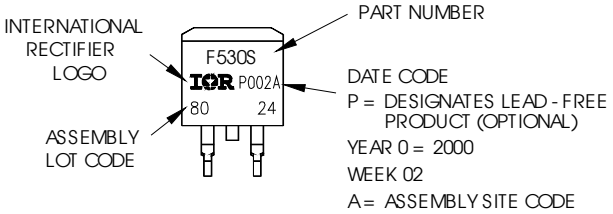

## D$^2$Pak Tape & Reel Information

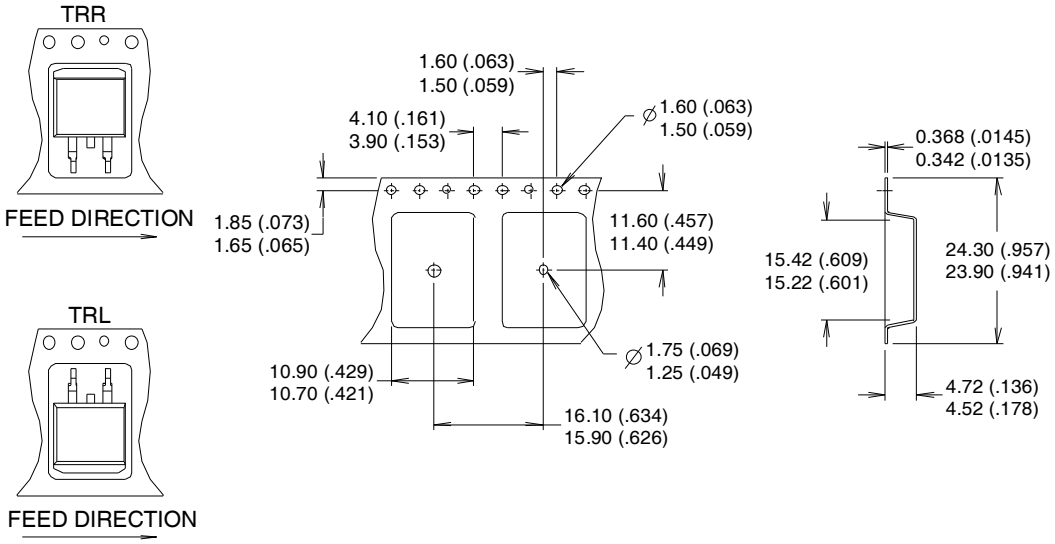


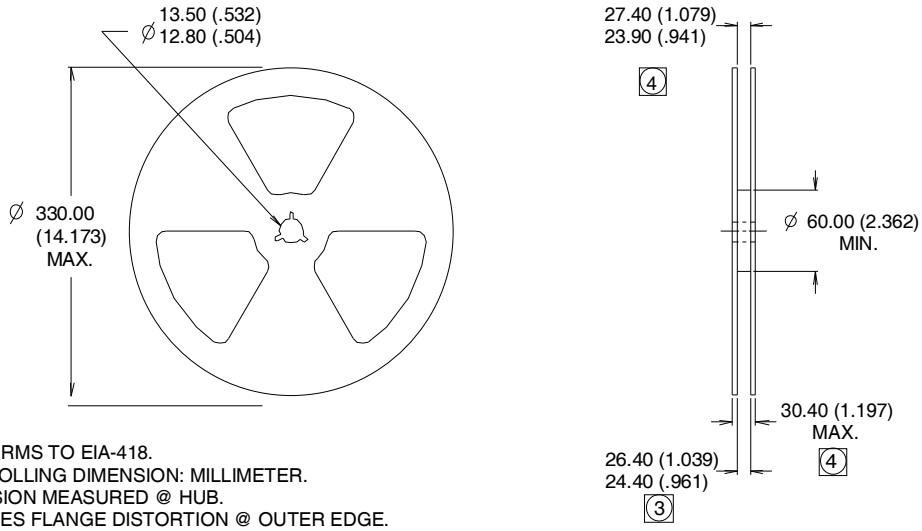


NOTES :
1. COMFORMS TO EIA-418.
2. CONTROLLING DIMENSION: MILLIMETER.
3. DIMENSION MEASURED @ HUB.
4. INCLUDES FLANGE DISTORTION @ OUTER EDGE.

Data and specifications subject to change without notice.
This product has been designed and qualified for Industrial market.
Qualification Standards can be found on IR's Web site.

International
IOR Rectifier
**IR WORLD HEADQUARTERS:** 101N.Sepulveda blvd, El Segundo, California 90245, USA Tel: (310) 252-7105
TAC Fax: (310) 252-7903
Visit us at www.irf.com for sales contact information.02/2012

Компания «ЭлектроПласт» предлагает заключение долгосрочных отношений при поставках импортных электронных компонентов на взаимовыгодных условиях!

Наши преимущества:

- Оперативные поставки широкого спектра электронных компонентов отечественного и импортного производства напрямую от производителей и с крупнейших мировых складов;
- Поставка более 17-ти миллионов наименований электронных компонентов;
- Поставка сложных, дефицитных, либо снятых с производства позиций;
- Оперативные сроки поставки под заказ (от 5 рабочих дней);
- Экспресс доставка в любую точку России;
- Техническая поддержка проекта, помощь в подборе аналогов, поставка прототипов;
- Система менеджмента качества сертифицирована по Международному стандарту ISO 9001;
- Лицензия ФСБ на осуществление работ с использованием сведений, составляющих государственную тайну;
- Поставка специализированных компонентов (Xilinx, Altera, Analog Devices, Intersil, Interpoint, Microsemi, Aeroflex, Peregrine, Syfer, Eurofarad, Texas Instrument, Miteq, Cobham, E2V, MA-COM, Hittite, Mini-Circuits,General Dynamics и др.);

Помимо этого, одним из направлений компании «ЭлектроПласт» является направление «Источники питания». Мы предлагаем Вам помощь Конструкторского отдела:

- Подбор оптимального решения, техническое обоснование при выборе компонента;
- Подбор аналогов;
- Консультации по применению компонента;
- Поставка образцов и прототипов;
- Техническая поддержка проекта;
- Защита от снятия компонента с производства.

**Как с нами связаться**

**Телефон:** 8 (812) 309 58 32 (многоканальный)
**Факс:** 8 (812) 320-02-42
**Электронная почта:** org@eplast1.ru
**Адрес:** 198099, г. Санкт-Петербург, ул. Калинина, дом 2, корпус 4, литера А.