ACPL-570xL, ACPL-573xL, ACPL-177xL, ACPL-675xL, 5962-08227 [1]

Hermetically Sealed 3.3V, Low I_F, Wide V_{CC}, High Gain Optocouplers

Data Sheet

Description

These devices are single, dual, and quad channel, hermetically sealed optocouplers. The products are capable of operation and storage over the full military temperature range and can be purchased as either commercial product or with full MIL-PRF-38534 Class Level H or K testing or from DLA Standard Microcircuit Drawing (SMD) 5962-08227. All devices are manufactured and tested on a MIL-PRF-38534 certified line and Class H and K devices are included in the DLA Qualified Products Database Supplemental Information Sheets QML-38534 as Hybrid Microcircuits.

Each channel contains a GaAsP light emitting diode that is optically coupled to an integrated high gain photon detector. The high gain output stage features an open collector output, providing both lower saturation voltage and higher signaling speed than possible with conventional photo-Darlington optocouplers.

The supply voltage can be operated as low as 3.0V without adversely affecting the parametric performance.

These devices have a 300% minimum CTR at an input current of only 0.5 mA, making them ideal for use in low input current applications such as MOS, CMOS, low-power logic interfaces, or line receivers.

CAUTION It is advised that normal static precautions be taken in handling and assembly of this component to prevent damage and/or degradation which may be induced by ESD.

1. See Selection Guide — Package Styles and Lead Configuration Options for available extensions.

Features

- Low power consumption
- 3.3V supply voltages
- Dual marked with device part number and DLA Standard Microcircuit Drawing (SMD)
- Manufactured and tested on a MIL-PRF-38534 Certified Line
- QML-38534, Class H and K
- Three hermetically sealed package configurations
- Performance guaranteed over full military temperature range: –55°C to +125°C
- Low input current requirement: 0.5 mA
- High current transfer ratio: 1500% typical at I_F = 0.5 mA
- Low output saturation voltage: 0.11V typical
- 1500 Vdc withstand test voltage
- HCPL-4701/31, -070A/31 function compatibility

Applications

- Military and aerospace
- High reliability systems
- Telephone ring detection
- Microprocessor system interface
- Transportation, medical, and life critical systems
- Isolated input line receiver
- EIA RS-232-C line receiver
- Voltage level shifting
- Isolated input line receiver
- Isolated output line driver
- Logic ground isolation
- Harsh industrial environments
- Current loop receiver
- System test equipment isolation
- Process control input/output isolation

Package styles for these parts are 8- and 16-pin DIP through hole (case outlines P and E respectively), and 16-pin surface mount DIP flat pack (case outline F). Devices can be purchased with a variety of lead bend and plating options. See the Selection Guide — Package Styles and Lead Configuration Options table for details. Standard Military Drawing (SMD) parts are available for some package and lead styles.

Because the same electrical die (emitters and detectors) are used for each channel of each device listed in this data sheet, absolute maximum ratings, recommended operating conditions, electrical specifications, and performance characteristics shown in the figures are similar for all parts except as noted. Additionally, the same package assembly processes and materials are used in all devices. These similarities justify the use of a common data base for die related reliability.

Functional Diagram

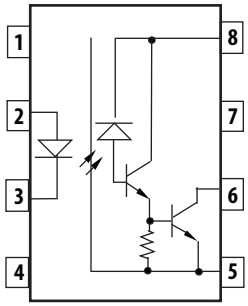

Truth Table

(Positive Logic)

Input	Output
On (H)	L
Off (L)	H

NOTE The connection of a 0.1-µF bypass capacitor between V_{CC} and GND is recommended.

Selection Guide — Package Styles and Lead Configuration Options

Package	16-Pin DIP	8-Pin DIP	8-Pin DIP	16-Pin Flat Pack
Lead Style	Through Hole	Through Hole	Through Hole	Unformed leads
Channels	4	1	2	4
Common Channel Wiring	V_{CC}, GND	None	V_{CC}, GND	V_{CC}, GND
Withstand Test Voltage	1500 Vdc	1500 Vdc	1500 Vdc	1500 Vdc
Part Number and Options				
Commercial	ACPL-1770L	ACPL-5700L	ACPL-5730L	ACPL-6750L
MIL-PRF-38534, Class H	ACPL-1772L	ACPL-5701L	ACPL-5731L	ACPL-6751L
MIL-PRF-38534, Class K	ACPL-177KL	ACPL-570KL	ACPL-573KL	ACPL-675KL
Standard Lead Finish[a]	Gold Plate	Gold Plate	Gold Plate	Gold Plate
Solder Dipped[b]	Option -200	Option -200	Option -200	
Butt Cut/Gold Plate[a]	Option -100	Option -100	Option -100	
Gull Wing/Soldered[b]	Option -300	Option -300	Option -300	
Class H SMD Part Number				
Prescript for all below	5962-	5962-	5962-	5962-
Gold Plate[a]	0822703HEC	0822701HPC	0822702HPC	0822704HZC
Solder Dipped[b]	0822703HEA	0822701HPA	0822702HPA	
Butt Cut/Gold Plate[a]	0822703HUC	0822701HYC	0822702HYC	
Butt Cut/Soldered[b]	0822703HUA	0822701HYA	0822702HYA	
Gull Wing/Soldered[b]	0822703HTA	0822701HXA	0822702HXA	

Package	16-Pin DIP	8-Pin DIP	8-Pin DIP	16-Pin Flat Pack
Class K SMD Part Number				
Prescript for all below	5962-	5962-	5962-	5962-
Gold Plate[a]	0822703KEC	0822701KPC	0822702KPC	0822704KZC
Solder Dipped*	0822703KEA	0822701KPA	0822702KPA	
Butt Cut/Gold Plate[a]	0822703KUC	0822701KYC	0822702KYC	
Butt Cut/Soldered[b]	0822703KUA	0822701KYA	0822702KYA	
Gull Wing/Soldered[b]	0822703KTA	0822701KXA	0822702KXA	

a. Gold Plate lead finish: Maximum gold thickness of leads is <100 micro inches. Typical is 60 to 90 micro inches.

b. Solder lead finish: Sn63/Pb37.

Functional Diagrams

16-Pin DIP	8-Pin DIP	8-Pin DIP
Through Hole and Flat Pack	Through Hole	Through Hole
4 Channels	1 Channel	2 Channels
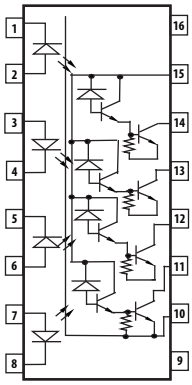	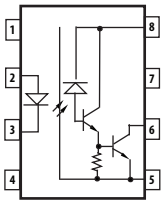	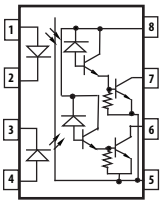

Device Marking

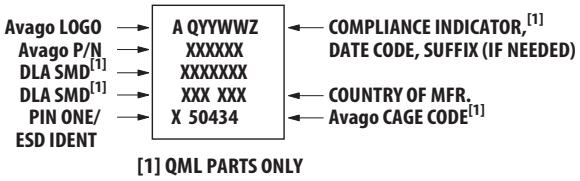

[1] QML PARTS ONLY

Outline Drawings

16-Pin DIP Through Hole, 4 Channels

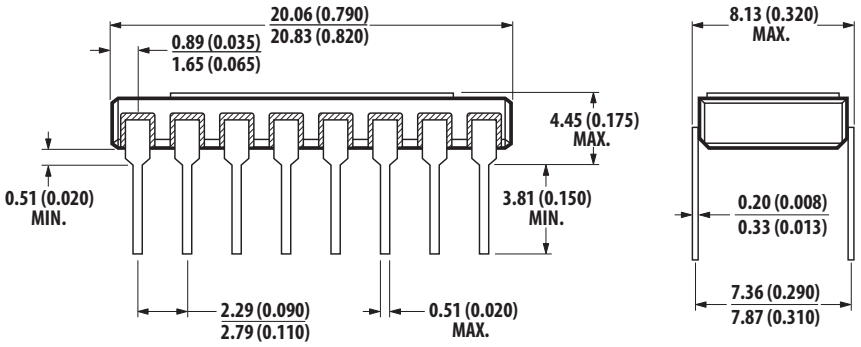

16-Pin Flat Pack, 4 Channels

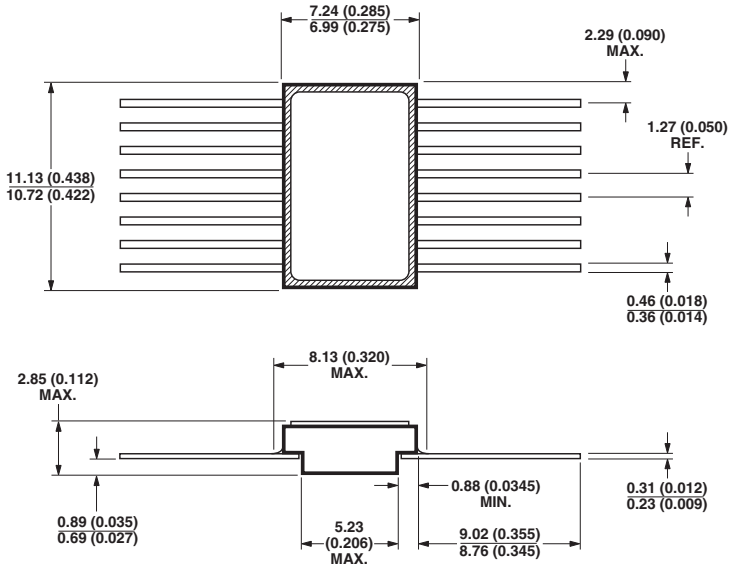

8-Pin DIP Through Hole, 1 and 2 Channel

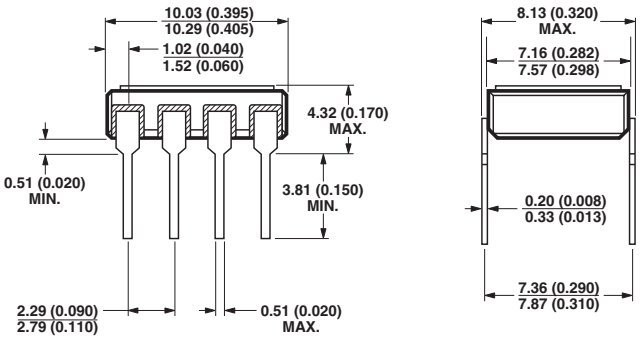

Note: Dimensions in Millimeters (Inches).

Hermetic Optocoupler Options

Option	Description
100	Surface-mountable hermetic optocoupler with leads trimmed for butt joint assembly. This option is available on Commercial, Class H and Class K product in 8-pin and 16-pin DIP. 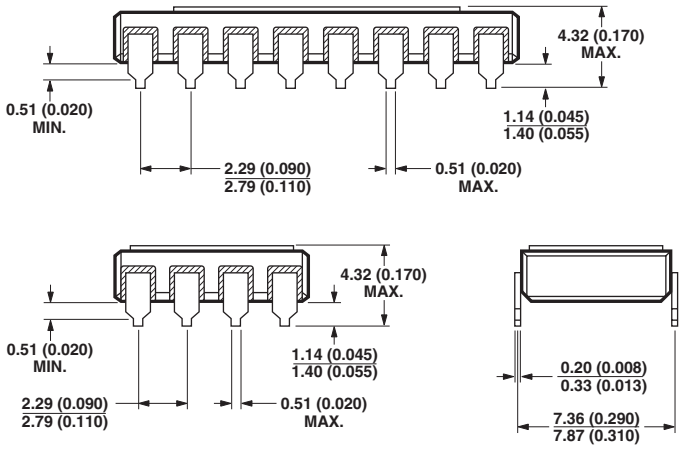
200	Lead finish is solder dipped rather than gold plated. This option is available on Commercial, Class H and Class K product in 8-pin and 16-pin DIP. DLA Drawing (SMD) part numbers contain provisions for lead finish.
300	Surface-mountable hermetic optocoupler with leads cut and bent for gull wing assembly. This option is available on Commercial, Class H and Class K product in 8-pin and 16-pin DIP. This option has solder-dipped leads. 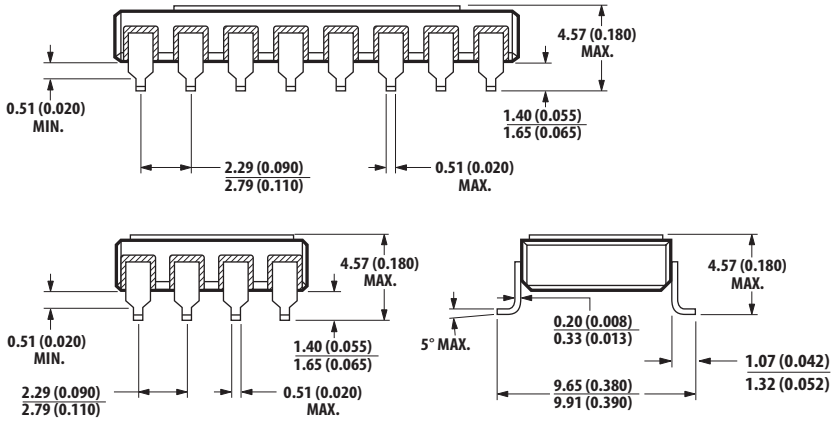

Absolute Maximum Ratings

Parameter	Symbol	Min.	Max.	Unit	Notes
Storage Temperature	T_S	–65	+150	°C	
Operating Temperature	T_A	–55	+125	°C	
Case Temperature	T_C	—	+170	°C	
Junction Temperature	T_J	—	+175	°C	
Lead Solder Temperature		—	260 for 10 sec	°C	
Output Current (Each Channel)	I_O	—	40	mA	
Output Voltage (Each Channel)	V_O	–0.5	20	V	a
Supply Voltage	V_{CC}	–0.5	20	V	a
Output Power Dissipation (Each Channel)		—	50	mW	b
Peak Input Current (Each Channel, <1 ms Duration)		—	20	mA	
Average Input Current (Each Channel)	I_F	—	10	mA	c
Reverse Input Voltage (Each Channel)	V_R	—	5	V	
Package Power Dissipation (Each Channel)	P_D	—	200	mW	

a. GND pin should be the most negative voltage at the detector side. Keeping V_{CC} as low as possible, but greater than 2.0V, will provide lowest total I_{OH} over temperature.

b. Output power is collector output power plus total supply power for the single-channel device. For the dual-channel device, output power is collector output power plus one half the total supply power. For the quad-channel device, output power is collector output power plus one fourth of total supply power. Derate at 1.66 mW/°C above 110°C.

c. Derate I_F at 0.33 mA/°C above 110°C.

8-Pin Ceramic DIP Single-Channel Schematic

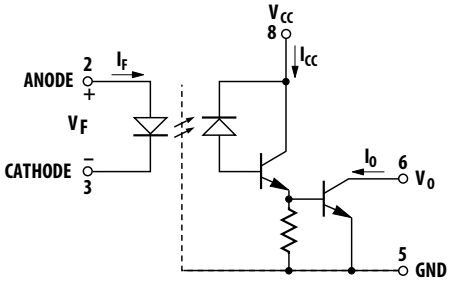

ESD Classification

(MIL-STD-883, Method 3015)

ACPL-5700L/01L/0KL, 5962-0822701	▲▲, Class 2
ACPL-5730L/31L/3KL, 5962-0822702	▲▲▲A, Class 3A
ACPL-1770L/2L/KL, 5962-0822703	▲▲▲B, Class 3B
ACPL-6750L/1L/KL, 5962-0822704	▲▲▲A, Class 3A

Recommended Operating Conditions

Parameter	Symbol	Min.	Max.	Unit
Input Current, Low Level (Each Channel)	$I_{F(OFF)}$	—	2.0	µA
Input Current, High Level (Each Channel)	$I_{F(ON)}$	0.5	5	mA
Supply Voltage	V_{CC}	3.0	7.0	V
Output Voltage	V_O	3.0	7.0	V

Electrical Characteristics

T_A = –55°C to +125°C, unless otherwise specified.

Parameter		Symbol	Test Conditions	Group A[a] Subgroup	Limits			Unit	Fig.	Note
					Min.	Typ.[b]	Max.			
Current Transfer Ratio		CTR	I_F = 0.5 mA, V_O = 0.4V, V_{CC} = 3.0V	1, 2, 3	300	1500	—	%	3	c, d
			I_F = 1.6 mA, V_O = 0.4V, V_{CC} = 3.0V		300	1300	—			
			I_F = 5 mA, V_O = 0.4V, V_{CC} = 3.0V		200	800	—			
Logic Low Output Voltage		V_{OL}	I_F = 0.5 mA, I_{OL} = 1.5 mA, V_{CC} = 3.0V	1, 2, 3	—	0.05	0.4	V	2	c
			I_F = 1.6 mA, I_{OL} = 4.8 mA, V_{CC} = 3.0V		—	0.06	0.4			c
			I_F = 5 mA, I_{OL} = 10 mA, V_{CC} = 3.0V		—	0.09	0.4			c
Logic High Output Current		I_{OH}	I_F = 2 µA, V_O = 7V, V_{CC} = 7V	1, 2, 3	—	1.0	100	µA		c
		I_{OHX}			—	1.0	100	µA		c, e
Logic Low Supply Current	Single Channel	I_{CCL}	I_F = 1.6 mA, V_{CC} = 7V	1, 2, 3	—	0.8	2	mA		
	Dual Channel		I_{F1} = I_{F2} = 1.6 mA, V_{CC} = 7V		—	0.8	4		4	
	Quad Channel		I_{F1} = I_{F2} = I_{F3} = I_{F4} = 1.6 mA, V_{CC} = 7 V		—	1.3	4			
Logic High Supply Current	Single Channel	I_{CCH}	I_F = 0 mA, V_{CC} = 7V	1, 2, 3	—	0.01	20	µA		
	Dual Channel		I_{F1} = I_{F2} = 0 mA, V_{CC} = 7V		—		40			
	Quad Channel		I_{F1} = I_{F2} = I_{F3} = I_{F4} = 0 mA, V_{CC} = 7V		—		40			
Input Forward Voltage		V_F	I_F = 1.6 mA	1, 2, 3	1.0	1.4	1.8	V	1	c
Input Reverse Breakdown Voltage		B_{VR}	I_R = 10 µA	1, 2, 3	5	—	—	V		c
Input-Output Insulation Leakage Current		I_{I-O}	≤65% Relative Humidity, T_A = 25°C, t = 5s, V_{I-O} = 1500 VDC	1	—	—	1.0	µA		f, g
Capacitance Between Input-Output		C_{I-O}	f = 1 MHz, T_A = 25°C	4	—	—	4	pF		c, h, i

Parameter	Symbol	Test Conditions	Group A[a] Subgroup	Limits			Unit	Fig.	Note
				Min.	Typ.[b]	Max.			
Propagation Delay Time to Logic Low at Output	t_{PHL}	I_F = 0.5 mA, R_L = 2.2 kΩ, V_{CC} = 3.3V	9, 10, 11	—	40	100	µs	5, 6, 7, 8	c
	t_{PHL}	I_F = 1.6 mA, R_L = 680Ω, V_{CC} = 3.3V	9, 10, 11	—	9	30			c
	t_{PHL}	I_F = 5 mA, R_L = 330Ω, V_{CC} = 3.3V	9	—	2	5			c
			10, 11	—	2	10			
Propagation Delay Time to Logic High at Output	t_{PLH}	I_F = 0.5 mA, R_L = 2.2 kΩ, V_{CC} = 3.3V	9, 10, 11	—	10	60	µs	5, 6, 7, 8	c
	t_{PLH}	I_F = 1.6 mA, R_L = 680Ω, V_{CC} = 3.3V	9, 10, 11	—	8	50			c
	t_{PLH}	I_F = 5 mA, R_L = 330Ω, V_{CC} = 3.3V	9	—	6	20			c
			10, 11			30			
Common Mode Transient Immunity at Low Output Level	$\|CM_L\|$	V_{CC} = 3.3V, I_F = 1.6 mA, R_L = 680Ω, $\|V_{CM}\|$ = 50 V_{P-P}	9, 10, 11	500	1000	—	V/µs	9	c, j, k, i
Common Mode Transient Immunity at High Output Level	$\|CM_H\|$	V_{CC} = 3.3 V, I_F = 0 mA, R_L = 680Ω, $\|V_{CM}\|$ = 50 V_{P-P}	9, 10, 11	500	1000	—	V/µs	9	c, j, k, i

a. Commercial parts receive 100% testing at 25°C (Subgroups 1 and 9). SMD and 883B parts receive 100% testing at 25, 125, and –55°C (Subgroups 1 and 9, 2 and 10, 3 and 11, respectively).

b. All typical values are at V_{CC} = 3.3V, T_A = 25°C.

c. Each channel.

d. Current Transfer Ratio is defined as the ratio of output collector current, I_O, to the forward LED input current, I_F, times 100%.

e. I_{OHX} is the leakage current resulting from channel-to-channel optical crosstalk. I_F = 2 µA for channel under test. For all other channels, I_F = 10 mA.

f. All devices are considered two-terminal devices; measured between all input leads or terminals shorted together and all output leads or terminals shorted together.

g. This is a momentary withstand test, not an operating condition.

h. Measured between each input pair shorted together and all output connections for that channel shorted together.

i. Parameters tested as part of device initial characterization and after design and process changes. Parameters guaranteed to limits specified for all lots not specifically tested.

j. CM_L is the maximum rate of rise of the common mode voltage that can be sustained with the output voltage in the logic low state (V_O < 0.8V). CM_H is the maximum rate of fall of the common mode voltage that can be sustained with the output voltage in the logic high state (V_O > 2.0V).

k. In applications where dV/dt may exceed 50,000 V/µs (such as a static discharge), a series resistor, R_{CC}, should be included to protect the detector ICs from destructively high surge currents. The recommended value is:

For single channel:

$$R_{CC} = \frac{1\,(V)}{0.15\ I_F\ (mA)}\ k\Omega$$

For dual channel:

$$R_{CC} = \frac{1\,(V)}{0.3\ I_F\ (mA)}\ k\Omega$$

For quad channel:

$$R_{CC} = \frac{1\,(V)}{0.6\ I_F\ (mA)}\ k\Omega$$

Typical Characteristics

$T_A = 25°C$

Parameter	Symbol	Typ.	Unit	Test Conditions	Note
Input Capacitance	C_{IN}	60	pF	$V_F = 0V$, f = 1 MHz	a
Input Diode Temperature Coefficient	$\Delta V_F/\Delta T_A$	–1.8	mV/°C	$I_F = 1.6$ mA	a
Resistance (Input-Output)	R_{I-O}	10^{12}	Ω	$V_{I-O} = 500V$	a, b
Capacitance (Input-Output)	C_{I-O}	2.0	pF	f = 1 MHz	a, b
Dual and Quad Channel Product Only					
Input-Input Leakage Current	I_{I-I}	0.5	nA	Relative Humidity = ≤65%, $V_{I-I} = 500V$, t = 5 s	c
Resistance (Input-Input)	R_{I-I}	10^{12}	Ω	$V_{I-I} = 500V$	c
Capacitance (Input-Input)	C_{I-I}	1.0	pF	f = 1 MHz	c

a. Each channel.

b. Measured between each input pair shorted together and all output connections for that channel shorted together.

c. Measured between adjacent input pairs shorted together for each multichannel device.

Figure 1 Input Diode Forward Current vs. Forward Voltage

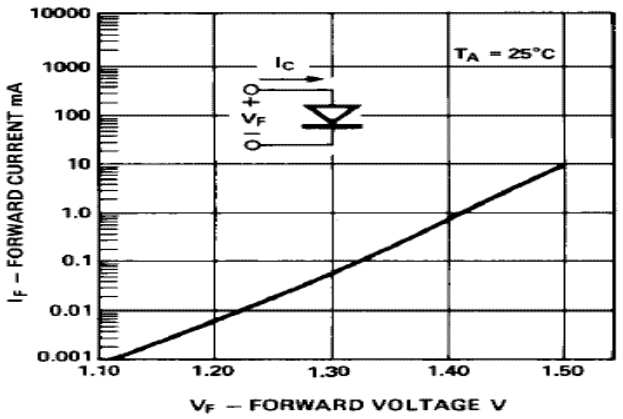

Figure 2 Normalized DC Transfer Characteristics

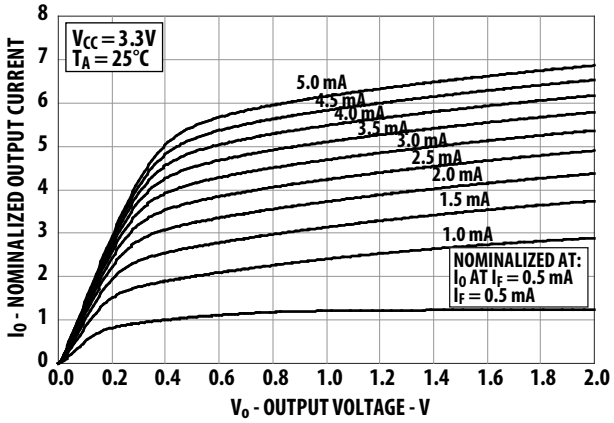

Figure 3 Normalized Current Transfer Ratio vs. Input Diode Forward Current

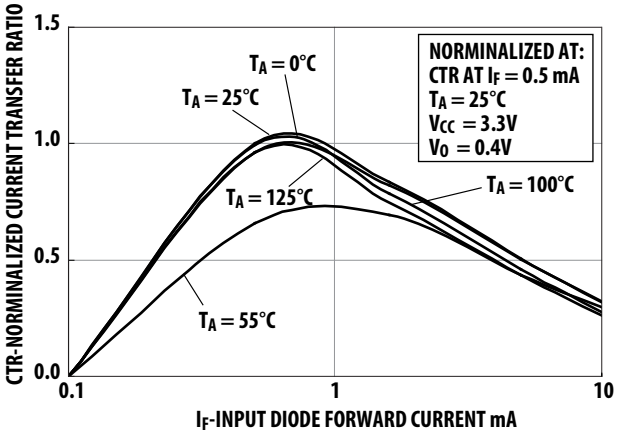

Figure 4 Normalized Supply Current vs. Input Diode Forward Current

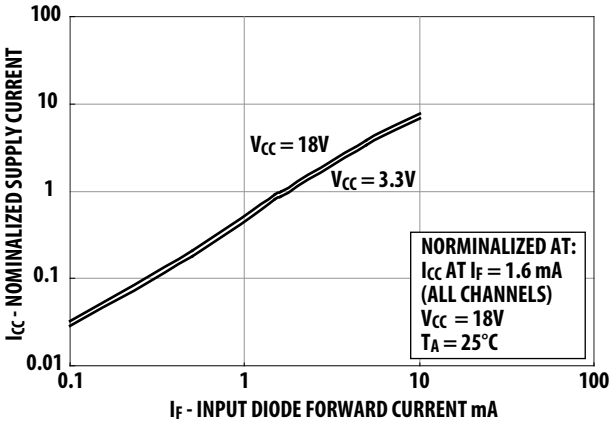

Figure 5 Propagation Delay to Logic Low vs. Input Pulse Period

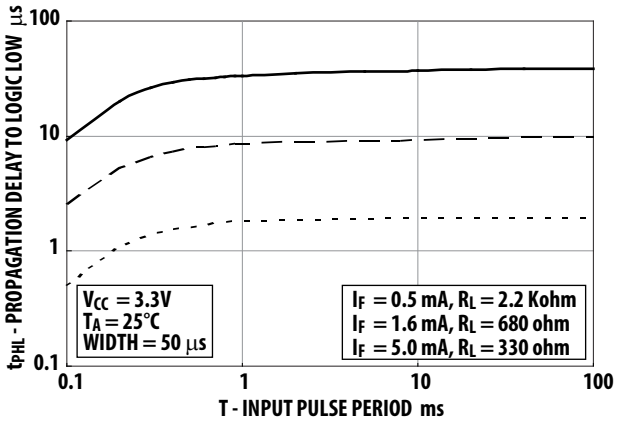

Figure 6 Propagation Delay vs. Temperature

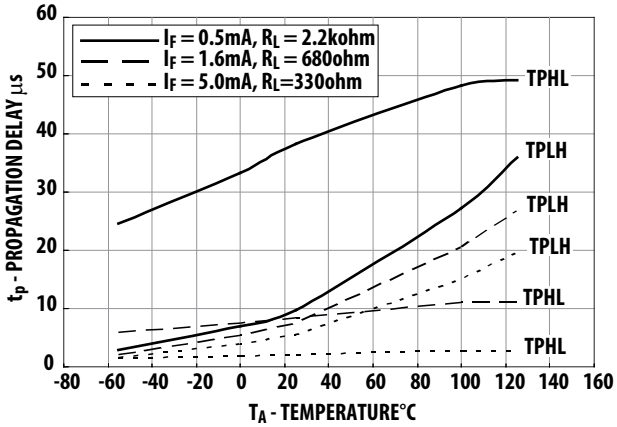

Figure 7 Propagation Delay vs. Input Diode Forward Current

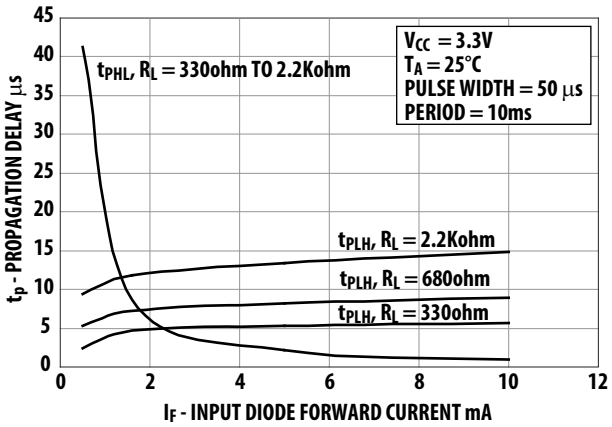

Figure 8 Switching Test Circuit

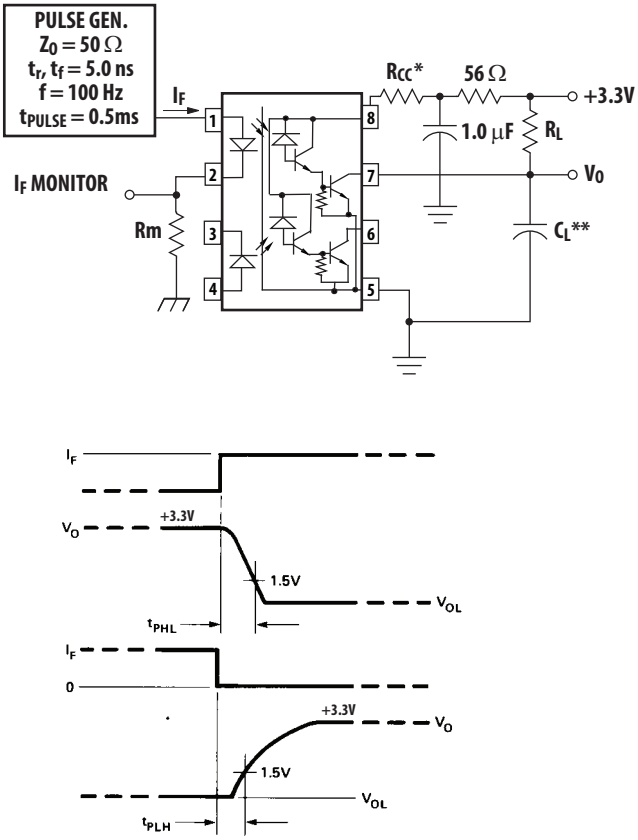

* See Electrical Characteristics, footnote k.

** C_L includes probe and stray wiring capacitance.

Figure 9 Test Circuit for Transient Immunity and Typical Waveforms

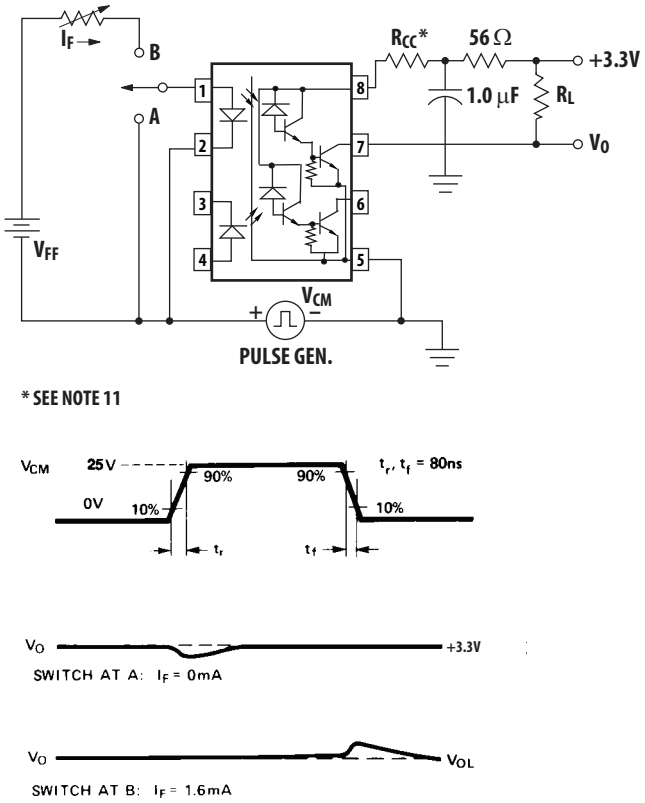

* See Electrical Characteristics, footnote k.

Figure 10 Recommended Drive Circuitry Using TTL Open-Collector Logic

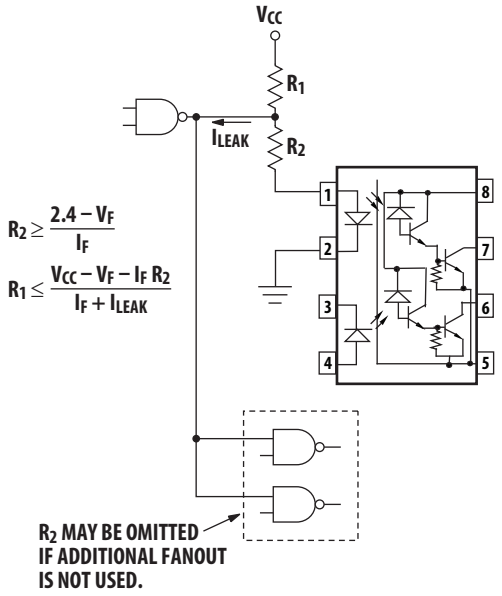

Figure 11 Operating Circuit for Burn-In and Steady State Life Tests

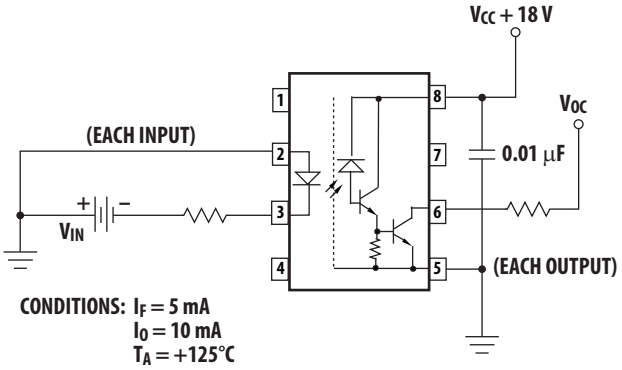

* ALL CHANNELS TESTED SIMULTANEOUSLY.

For product information and a complete list of distributors, please go to our web site: www.broadcom.com.

Broadcom, the pulse logo, Connecting everything, Avago Technologies, Avago, and the A logo are among the trademarks of Broadcom in the United States, certain other countries and/or the EU.

Copyright © 2005-2019 Broadcom. All Rights Reserved.

The term "Broadcom" refers to Broadcom Inc. and/or its subsidiaries. For more information, please visit www.broadcom.com.

Broadcom reserves the right to make changes without further notice to any products or data herein to improve reliability, function, or design.

Information furnished by Broadcom is believed to be accurate and reliable. However, Broadcom does not assume any liability arising out of the application or use of this information, nor the application or use of any product or circuit described herein, neither does it convey any license under its patent rights nor the rights of others.

AV02-1819EN – January 11, 2019

Компания «ЭлектроПласт» предлагает заключение долгосрочных отношений при поставках импортных электронных компонентов на взаимовыгодных условиях!

Наши преимущества:

- Оперативные поставки широкого спектра электронных компонентов отечественного и импортного производства напрямую от производителей и с крупнейших мировых складов;
- Поставка более 17-ти миллионов наименований электронных компонентов;
- Поставка сложных, дефицитных, либо снятых с производства позиций;
- Оперативные сроки поставки под заказ (от 5 рабочих дней);
- Экспресс доставка в любую точку России;
- Техническая поддержка проекта, помощь в подборе аналогов, поставка прототипов;
- Система менеджмента качества сертифицирована по Международному стандарту ISO 9001;
- Лицензия ФСБ на осуществление работ с использованием сведений, составляющих государственную тайну;
- Поставка специализированных компонентов (Xilinx, Altera, Analog Devices, Intersil, Interpoint, Microsemi, Aeroflex, Peregrine, Syfer, Eurofarad, Texas Instrument, Miteq, Cobham, E2V, MA-COM, Hittite, Mini-Circuits,General Dynamics и др.);

Помимо этого, одним из направлений компании «ЭлектроПласт» является направление «Источники питания». Мы предлагаем Вам помощь Конструкторского отдела:

- Подбор оптимального решения, техническое обоснование при выборе компонента;
- Подбор аналогов;
- Консультации по применению компонента;
- Поставка образцов и прототипов;
- Техническая поддержка проекта;
- Защита от снятия компонента с производства.

Как с нами связаться

Телефон: 8 (812) 309 58 32 (многоканальный)
Факс: 8 (812) 320-02-42
Электронная почта: org@eplast1.ru
Адрес: 198099, г. Санкт-Петербург, ул. Калинина, дом 2, корпус 4, литера А.