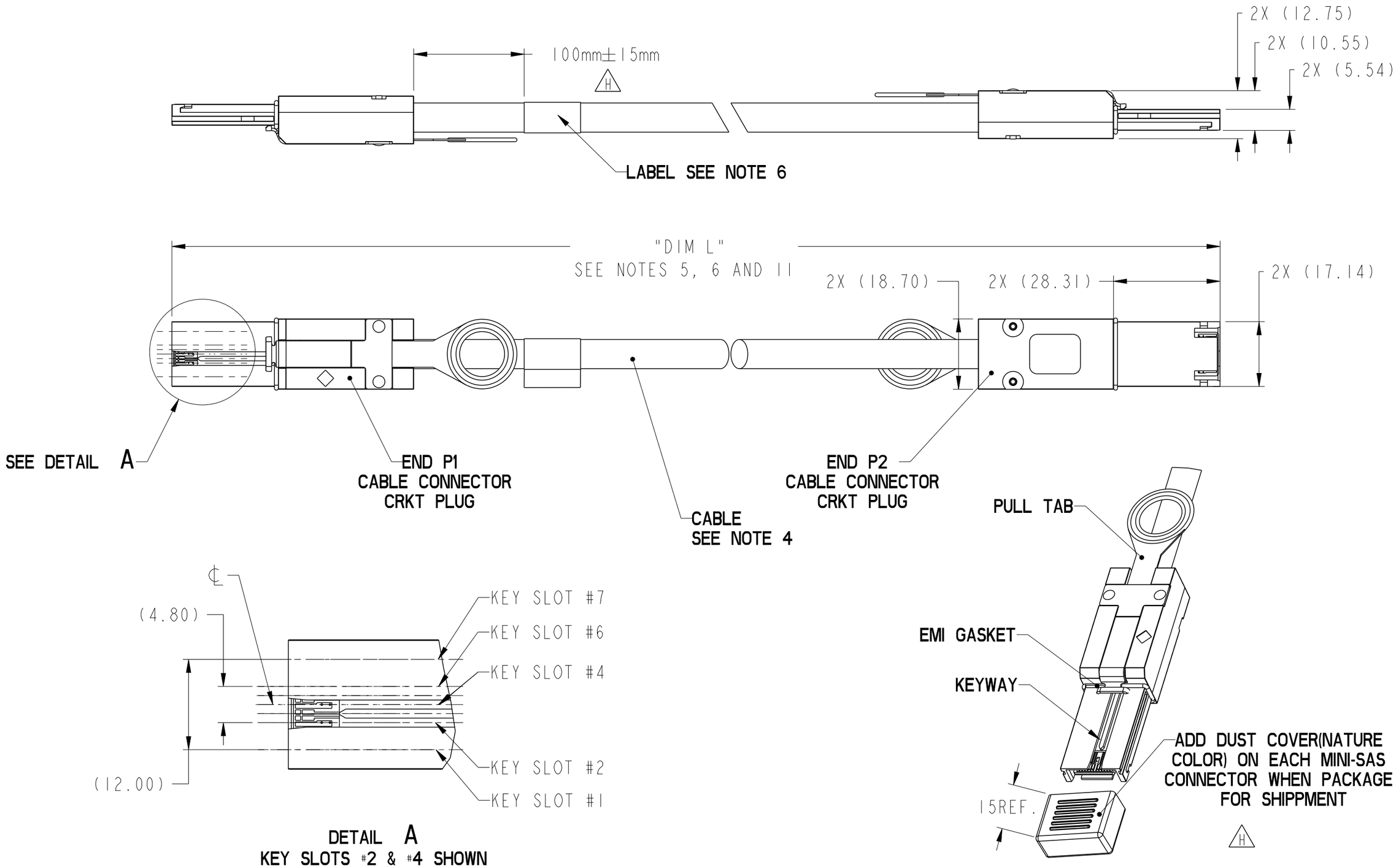


| | | | | | | | | |
|---|---|---|---|---|---|---|---|---|
| spec ref | --- | | | dr | Stu Stoner | 2008/02/05 | projection | MM | size A3 | scale 1:1 |
| tolerance std --- --- | TOLERANCES UNLESS OTHERWISE SPECIFIED | | | eng | Tom Feng | 2014/09/24 | | | | |
| | | | | chr | - | - | | | ecn no | ELX-N-18883-1 |
| | | | | appr | Delhly Liu | 2014/09/24 | product family | MiniSAS/SATA | rel level | Released |
| surface - | linear | 0.X | ±0.3 | FCI | title | FINAL CABLE ASSEMBLY-ALTERNATE CABLE Mini SAS 2.0/SATA (CRKT) | dwg no | 10084749 | rev H |
| | | 0.XX | ±0.10 | | | | | | |
| | | 0.XXX | ±0.050 | | | | | | |
| --- | angular | 0° | ±2°° | www.fci.com | cat. no. | - | Product - Customer Drw | | sheet 1 of 6 |

Copyright FCI.

# MINI SAS 2.0

| PRODUCT NUMBER SEE NOTE 4 | HUAWEI PART NUMBER | DESCRIPTION | GAUGE | "DIM L" LENGTH | END P1 KEY SLOT | END P2 KEY SLOT | IDENTIFIER |
|---|---|---|---|---|---|---|---|
| 10084749-M060002LF | / | X4 SAS CABLE ASSEMBLY | 24 AWG | 6M | 4, 6 | 4, 6 | SUBTRACTIVE ROUTING (IN PORT), SAS |
| 10084749-N040002LF | / | X4 SAS CABLE ASSEMBLY | 26 AWG | 4M | 4, 6 | 4, 6 | |
| 10084749-N050002LF | / | X4 SAS CABLE ASSEMBLY | 26 AWG | 5M | 4, 6 | 4, 6 | |
| 10084749-P010002LF | / | X4 SAS CABLE ASSEMBLY | 28 AWG | 1M | 4, 6 | 4, 6 | |
| 10084749-P020002LF | / | X4 SAS CABLE ASSEMBLY | 28 AWG | 2M | 4, 6 | 4, 6 | |
| 10084749-P030002LF | / | X4 SAS CABLE ASSEMBLY | 28 AWG | 3M | 4, 6 | 4, 6 | |
| 10084749-M060003LF | / | X4 SAS CABLE ASSEMBLY | 24 AWG | 6M | 2, 4, 6 | 2, 4, 6 | UNIVERSAL KEY, SAS |
| 10084749-N030003LF | / | X4 SAS CABLE ASSEMBLY | 26 AWG | 3M | 2, 4, 6 | 2, 4, 6 | |
| 10084749-N040003LF | / | X4 SAS CABLE ASSEMBLY | 26 AWG | 4M | 2, 4, 6 | 2, 4, 6 | |
| 10084749-N050003LF | / | X4 SAS CABLE ASSEMBLY | 26 AWG | 5M | 2, 4, 6 | 2, 4, 6 | |
| 10084749-P002503LF | / | X4 SAS CABLE ASSEMBLY | 28 AWG | 0.25M | 2, 4, 6 | 2, 4, 6 | |
| 10084749-P010003LF | / | X4 SAS CABLE ASSEMBLY | 28 AWG | 1M | 2, 4, 6 | 2, 4, 6 | |
| 10084749-P015003LF | / | X4 SAS CABLE ASSEMBLY | 28 AWG | 1.5M | 2, 4, 6 | 2, 4, 6 | |
| 10084749-P020003LF | / | X4 SAS CABLE ASSEMBLY | 28 AWG | 2M | 2, 4, 6 | 2, 4, 6 | |
| 10084749-P025003LF | / | X4 SAS CABLE ASSEMBLY | 28 AWG | 2.5M | 2, 4, 6 | 2, 4, 6 | |
| 10084749-P030003LF | / | X4 SAS CABLE ASSEMBLY | 28 AWG | 3M | 2, 4, 6 | 2, 4, 6 | |
| 10084749-M060006LF | / | X4 SAS CABLE ASSEMBLY | 24 AWG | 6M | 2, 4 | 4, 6 | SAS, TABLE ROUTING (OUT PORT), TO SUBTRACTIVE ROUTING (IN PORT) |
| 10084749-N010006LF | / | X4 SAS CABLE ASSEMBLY | 26 AWG | 1M | 2, 4 | 4, 6 | |
| 10084749-N030006LF | / | X4 SAS CABLE ASSEMBLY | 26 AWG | 3M | 2, 4 | 4, 6 | |
| 10084749-N040006LF | / | X4 SAS CABLE ASSEMBLY | 26 AWG | 4M | 2, 4 | 4, 6 | |
| 10084749-N050006LF | / | X4 SAS CABLE ASSEMBLY | 26 AWG | 5M | 2, 4 | 4, 6 | |
| 10084749-P010006LF | 0405G005 | X4 SAS CABLE ASSEMBLY | 28 AWG | 1M | 2, 4 | 4, 6 | |
| 10084749-P020006LF | / | X4 SAS CABLE ASSEMBLY | 28 AWG | 2M | 2, 4 | 4, 6 | |
| 10084749-P030006LF | 0405G003 | X4 SAS CABLE ASSEMBLY | 28 AWG | 3M | 2, 4 | 4, 6 | |

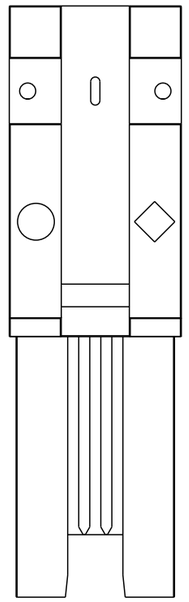

KEY SLOT 2,4 & 6
○ ◇ UNVERSIAL PORT

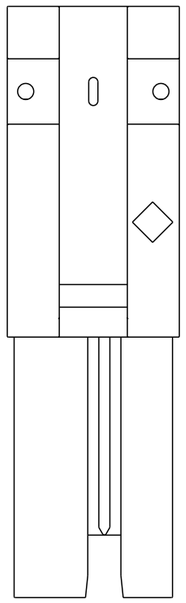

KEY SLOT 2 & 4
◇ OUT PORT

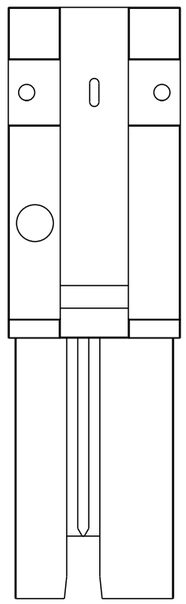

KEY SLOT 4 & 6
○ IN PORT

## MINI SAS 2.0 KEYING OPTIONS

| | | | | | | | | |
|---|---|---|---|---|---|---|---|---|
| spec ref | --- | | | dr | Stu Stoner | 2008/02/05 | projection | MM |
| tolerance std | TOLERANCES UNLESS OTHERWISE SPECIFIED | | | eng | Tom Feng | 2014/09/24 | | |
| --- | | | | chr | - | - | | |
| --- | | | | appr | Delhly Liu | 2014/09/24 | product family | MiniSAS/SATA |
| surface - | linear | 0.X | ±0.3 | title | FINAL CABLE ASSEMBLY-ALTERNATE CABLE | | dwg no | 10084749 |
| | | 0.XX | ±0.10 | | Mini SAS 2.0/SATA (CRKT) | | | |
| | | 0.XXX | ±0.050 | | | | | |
| --- | angular | 0° | ±2°° | www.fci.com | cat. no. | - | Product - Customer Drw | |

| size | scale | rev |
|---|---|---|
| A3 | 1:1 | H |

ecn no: ELX-N-18883-1
rel level: Released
sheet 2 of 6

Copyright FCI.

# SATA

| PRODUCT NUMBER SEE NOTE 4 | DESCRIPTION | GAUGE | "DIM L" LENGTH | END P1 KEY SLOT | END P2 KEY SLOT | IDENTIFIER |
|---|---|---|---|---|---|---|
| 10084749-M060004LF | X4 SATA CABLE ASSEMBLY | 24 AWG | 6M | 1,4 | 1,4 | X CABLE, SATA |
| 10084749-N020004LF | X4 SATA CABLE ASSEMBLY | 26 AWG | 2M | 1,4 | 1,4 | |
| 10084749-N040004LF | X4 SATA CABLE ASSEMBLY | 26 AWG | 4M | 1,4 | 1,4 | |
| 10084749-N050004LF | X4 SATA CABLE ASSEMBLY | 26 AWG | 5M | 1,4 | 1,4 | |
| 10084749-P010004LF | X4 SATA CABLE ASSEMBLY | 28 AWG | 1M | 1,4 | 1,4 | |
| 10084749-P030004LF | X4 SATA CABLE ASSEMBLY | 28 AWG | 3M | 1,4 | 1,4 | |
| 10084749-M060005LF | X4 SATA CABLE ASSEMBLY | 24 AWG | 6M | 7 | 7 | M CABLE, SATA |
| 10084749-N020005LF | X4 SATA CABLE ASSEMBLY | 26 AWG | 2M | 7 | 7 | |
| 10084749-N040005LF | X4 SATA CABLE ASSEMBLY | 26 AWG | 4M | 7 | 7 | |
| 10084749-N050005LF | X4 SATA CABLE ASSEMBLY | 26 AWG | 5M | 7 | 7 | |
| 10084749-P010005LF | X4 SATA CABLE ASSEMBLY | 28 AWG | 1M | 7 | 7 | |
| 10084749-P030005LF | X4 SATA CABLE ASSEMBLY | 28 AWG | 3M | 7 | 7 | |

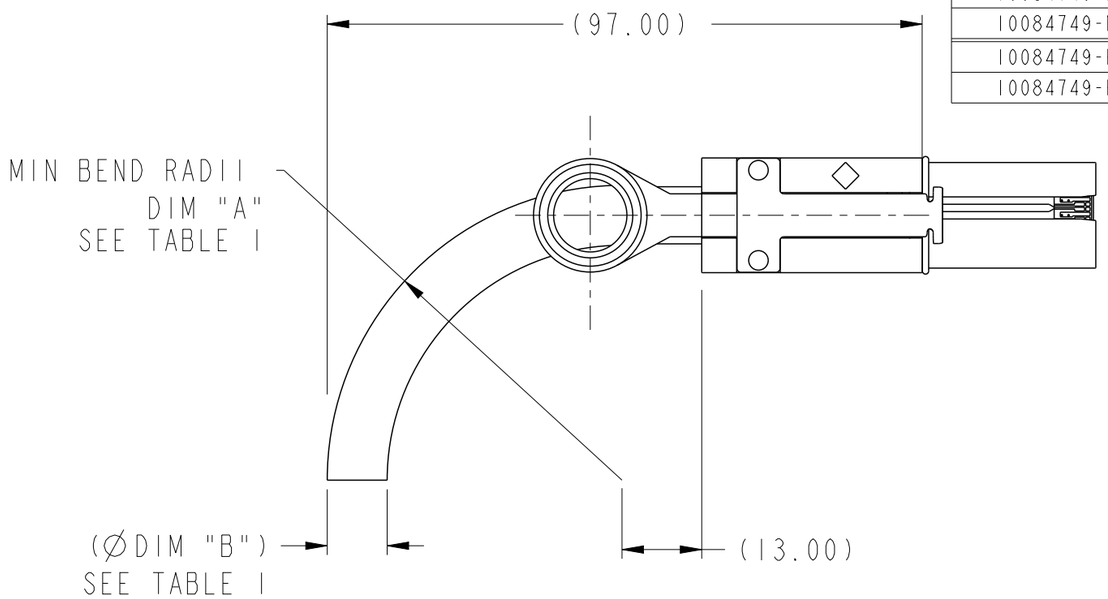


**BEND RADIUS**
**(24 AWG SHOWN)**

## TABLE 1

| CABLE | DIM "A" | DIM "B" |
|---|---|---|
| 24 AWG | (R46.9) | (∅9.5mm) |
| 26 AWG | (R41.7) | (∅8.3mm) |
| 28 AWG | (R37.7) | (∅7.6mm) |

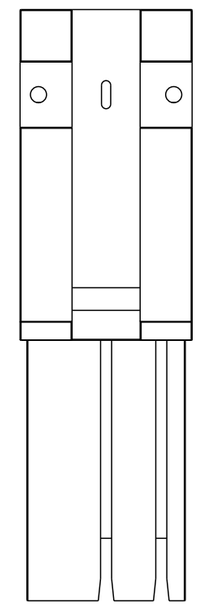

KEY SLOT 1 & 4
X CABLE, SATA

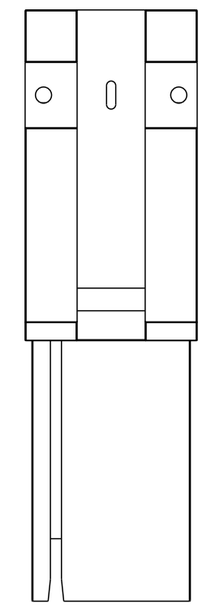

KEY SLOT 7
M CABLE, SATA

## SATA KEYING OPTIONS

| | | | | | | | |
|---|---|---|---|---|---|---|---|
| spec ref | --- | dr | Stu Stoner | 2008/02/05 | projection | MM | size A3 / scale 1:1 |
| tolerance std --- --- | TOLERANCES UNLESS OTHERWISE SPECIFIED | eng | Tom Feng | 2014/09/24 | | | ecn no ELX-N-18883-1 |
| | | chr | - | - | | | |
| | | appr | Delhly Liu | 2014/09/24 | product family | MiniSAS/SATA | rel level Released |
| surface - | linear 0.X ±0.3 / 0.XX ±0.10 / 0.XXX ±0.050 | FCI | title | FINAL CABLE ASSEMBLY-ALTERNATE CABLE Mini SAS 2.0/SATA (CRKT) | dwg no | 10084749 | rev H |
| --- | angular 0° ±2°° | www.fci.com | cat. no. | - | Product - Customer Drw | | sheet 3 of 6 |

Copyright FCI.

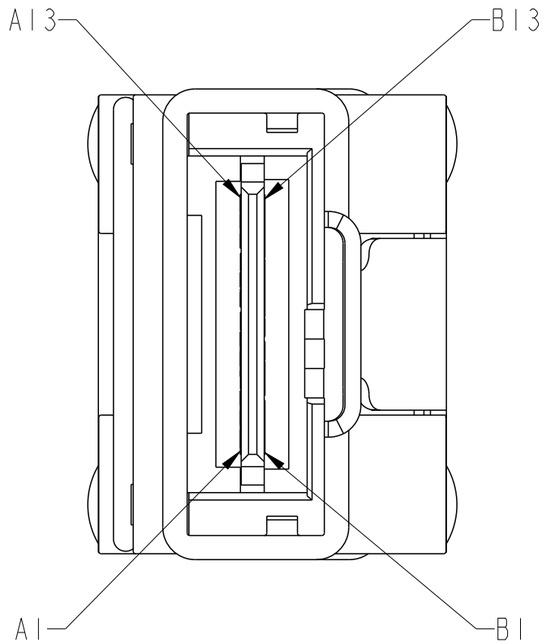


## WIRING LIST SEE NOTE 7

| | | | | | | |
|---|---|---|---|---|---|---|
| P1 | GND | A1 | — | B1 | GND | P2 |
| | Rx 0+ | A2 | ← | B2 | Tx 0+ | |
| | Rx 0- | A3 | | B3 | Tx 0- | |
| | GND | A4 | — | B4 | GND | |
| | Rx 1+ | A5 | ← | B5 | Tx 1+ | |
| | Rx 1- | A6 | | B6 | Tx 1- | |
| | GND | A7 | — | B7 | GND | |
| | Rx 2+ | A8 | ← | B8 | Tx 2+ | |
| | Rx 2- | A9 | | B9 | Tx 2- | |
| | GND | A10 | — | B10 | GND | |
| | Rx 3+ | A11 | ← | B11 | Tx 3+ | |
| | Rx 3- | A12 | | B12 | Tx 3- | |
| | GND | A13 | — | B13 | GND | |
| | GND | B1 | — | A1 | GND | |
| | Tx 0+ | B2 | → | A2 | Rx 0+ | |
| | Tx 0- | B3 | | A3 | Rx 0- | |
| | GND | B4 | — | A4 | GND | |
| | Tx 1+ | B5 | → | A5 | Rx 1+ | |
| | Tx 1- | B6 | | A6 | Rx 1- | |
| | GND | B7 | — | A7 | GND | |
| | Tx 2+ | B8 | → | A8 | Rx 2+ | |
| | Tx 2- | B9 | | A9 | Rx 2- | |
| | GND | B10 | — | A10 | GND | |
| | Tx 3+ | B11 | → | A11 | Rx 3+ | |
| | Tx 3- | B12 | | A12 | Rx 3- | |
| | GND | B13 | — | A13 | GND | |

Copyright FCI.

| | | | | | | | | |
|---|---|---|---|---|---|---|---|---|
| spec ref | --- | | | dr | Stu Stoner | 2008/02/05 | projection | MM |
| tolerance std | TOLERANCES UNLESS OTHERWISE SPECIFIED | | | eng | Tom Feng | 2014/09/24 | | |
| --- --- | | | | chr | - | - | | |
| | | | | appr | Delhly Liu | 2014/09/24 | product family | MiniSAS/SATA |
| surface | linear | 0.X | ±0.3 | title | FINAL CABLE ASSEMBLY-ALTERNATE CABLE Mini SAS 2.0/SATA (CRKT) | | dwg no | 10084749 |
| | | 0.XX | ±0.10 | | | | | |
| | | 0.XXX | ±0.050 | | | | | |
| --- | angular | 0° | ±2°° | www.fci.com | cat. no. - | | Product - Customer Drw | sheet 4 of 6 |

| | |
|---|---|
| size | A3 |
| scale | 1:1 |
| ecn no | ELX-N-18883-1 |
| rel level | Released |
| rev | H |

Pro/E File - REV C - 2009-06-09

PDS: Rev :H STATUS:Released Printed: Sep 24, 2014

NOTES:

1 - MATERIAL:
BACK SHELLS: ZINC DIECAST
PULL TAB: MOLDED THERMOPLASTIC
LATCH: STAINLESS STEEL
JET MELT: POLYAMIDE POLYMER

2 - ELECTRICAL PERFORMANCE PER CURRENT REVISION OF SERIAL ATA, T10/1760-D (SAS-2 REQUIREMENTS).

3 - THIS PRODUCT MEETS THE RESTRICTION OF HAZARDOUS SUBSTANCES IN ELECTRICAL AND ELECTRONIC EQUIPMENT (RoHS) DIRECTIVE (2002/95/EC)

4 - PART NUMBER DESCRIPTION

10084749 - X XX XX XX LF

LF: LEAD FREE (SEE NOTE 3 AND 10)

XX: KEY SLOT
01: KEY SLOT 2,4
02: KEY SLOT 4,6
03: KEY SLOT 2,4,6
04: KEY SLOT 1,4
05: KEY SLOT 7
06: P1= KEY SLOT 2,4 P2= KEY SLOT 4,6

XX XX: LENGTH
XX= METERS, XX=CENTIMETERS
0100 = 01 METERS, 00 CENTIMETERS ("DIM L")

X: GAUGE
M: 24 AWG
N: 26 AWG
P: 28 AWG

5 - UNLESS OTHERWISE SPECIFIED ASSEMBLED LENGTH TOLERANCE IS TO BE:
< 1 METER = ±25.0mm
> 1 METER TO 6 METERS = ± 2% OF "DIM L"

Copyright FCI.

| | | | | | | | | | |
|---|---|---|---|---|---|---|---|---|---|
| spec ref | --- | | | dr | Stu Stoner | 2008/02/05 | projection | MM | size A3 / scale 1:1 |
| tolerance std --- --- | TOLERANCES UNLESS OTHERWISE SPECIFIED | | | eng | Tom Feng | 2014/09/24 | | | |
| | | | | chr | - | - | | | ecn no ELX-N-18883-1 |
| | | | | appr | Delhly Liu | 2014/09/24 | product family | MiniSAS/SATA | rel level Released |
| surface - | linear | 0.X | ±0.3 | FCI | title FINAL CABLE ASSEMBLY-ALTERNATE CABLE Mini SAS 2.0/SATA (CRKT) | | dwg no 10084749 | | rev H |
| | | 0.XX | ±0.10 | | | | | | |
| | | 0.XXX | ±0.050 | | | | | | |
| --- | angular | 0° | ±2°° | www.fci.com | cat. no. - | | Product - Customer Drw | | sheet 5 of 6 |

Pro/E File - REV C - 2009-06-09

NOTES CONTINUED:

6 - UNLESS OTHERWISE SPECIFIED LABEL POSITION IS TO BE 100mm FROM REAR OF CONNECTOR.
LABEL DETAILS:

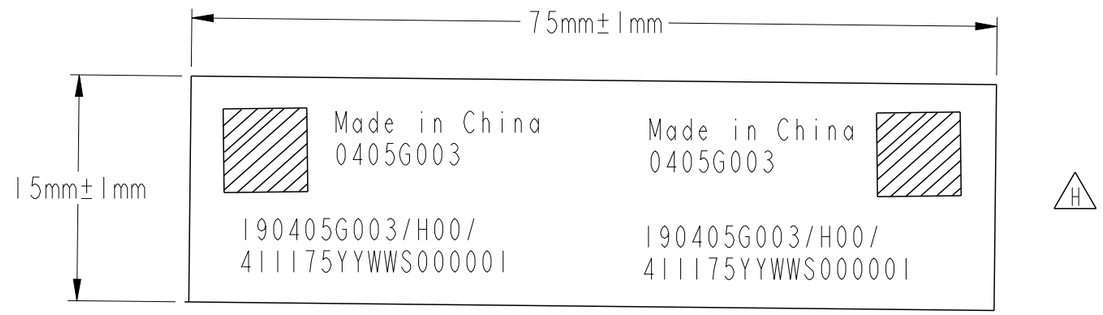


FONT SHALL BE CLEARLY VISIBLE AND BLACK IN COLOR.

7 - ALL CABLE ASSEMBLIES SHALL BE 100% TESTED FOR CONTINUITY AS DEFINED IN WIRING LIST.

8 - UNLESS OTHERWISE SPECIFIED ALL CABLE ASSEMBLIES SHALL BE 100% HI-POT TESTED BY APPLYING 300V DC FOR A MINIUM OF 10ms, UNLESS ACTIVE COMPONENTS ARE USED IN THIS ASSEMBLY.

9 - OTHER TESTING PERFORMED AS REQUIRED BY PRODUCT SPECIFICATION: GS-12-548.

10 - PACKAGING OF LEAD FREE PRODUCTS MEETS LABELING AND PACKAGING PER SPECIFICATION GS-14-920.
PACKAGE CABLE ASSEMBLIES PER GS-14-1272.
ADD DUST COVER ON MINI-SAS CONNECTOR WHEN PACKAGE FOR SHIPPMENT
NEED STICK BELOW LABEL ON PE BAG.

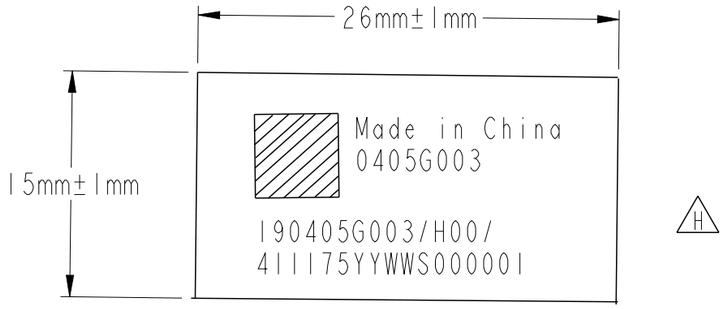


11. THIS DIMENSION IS A FINISHED PRODUCT LENGTH.

12. A "△" SYMBOL WILL BE NEXT TO ANY DIMENSION, VIEW, OR NOTE WHICH HAS BEEN MODIFIED WITH THE CURRENT DRAWING REVISION. THE CURRENT REVISION WILL BE SHOWN IN THE SYMBOL.

| | | | | | | | |
|---|---|---|---|---|---|---|---|
| spec ref --- | | | dr | Stu Stoner | 2008/02/05 | projection | MM |
| tolerance std --- --- | TOLERANCES UNLESS OTHERWISE SPECIFIED | | eng | Tom Feng | 2014/09/24 | | |
| | | | chr | - | - | | |
| | | | appr | Delhly Liu | 2014/09/24 | product family | MiniSAS/SATA |
| surface - | linear | 0.X | ±0.3 | FCI | title | FINAL CABLE ASSEMBLY-ALTERNATE CABLE Mini SAS 2.0/SATA (CRKT) | dwg no 10084749 |
| | | 0.XX | ±0.10 | | | | |
| | | 0.XXX | ±0.050 | | | | |
| --- | angular | 0° | ±2°° | www.fci.com | cat. no. - | Product - Customer Drw | sheet 6 of 6 |

| | |
|---|---|
| size | A3 |
| scale | 1:1 |
| ecn no | ELX-N-18883-1 |
| rel level | Released |
| rev | H |

Copyright FCI.

Компания «ЭлектроПласт» предлагает заключение долгосрочных отношений при поставках импортных электронных компонентов на взаимовыгодных условиях!

Наши преимущества:

- Оперативные поставки широкого спектра электронных компонентов отечественного и импортного производства напрямую от производителей и с крупнейших мировых складов;
- Поставка более 17-ти миллионов наименований электронных компонентов;
- Поставка сложных, дефицитных, либо снятых с производства позиций;
- Оперативные сроки поставки под заказ (от 5 рабочих дней);
- Экспресс доставка в любую точку России;
- Техническая поддержка проекта, помощь в подборе аналогов, поставка прототипов;
- Система менеджмента качества сертифицирована по Международному стандарту ISO 9001;
- Лицензия ФСБ на осуществление работ с использованием сведений, составляющих государственную тайну;
- Поставка специализированных компонентов (Xilinx, Altera, Analog Devices, Intersil, Interpoint, Microsemi, Aeroflex, Peregrine, Syfer, Eurofarad, Texas Instrument, Miteq, Cobham, E2V, MA-COM, Hittite, Mini-Circuits,General Dynamics и др.);

Помимо этого, одним из направлений компании «ЭлектроПласт» является направление «Источники питания». Мы предлагаем Вам помощь Конструкторского отдела:

- Подбор оптимального решения, техническое обоснование при выборе компонента;
- Подбор аналогов;
- Консультации по применению компонента;
- Поставка образцов и прототипов;
- Техническая поддержка проекта;
- Защита от снятия компонента с производства.

**Как с нами связаться**

**Телефон:** 8 (812) 309 58 32 (многоканальный)
**Факс:** 8 (812) 320-02-42
**Электронная почта:** org@eplast1.ru
**Адрес:** 198099, г. Санкт-Петербург, ул. Калинина, дом 2, корпус 4, литера А.