Push-Pull connectors

Introduction

This catalog presents the push-pull connectors ranges for industrial applications.

These products are particularly suitable for high reliability and high quality applications where a simple yet fast method to connect/disconnect is required. Also suitable for high endurance and ease of operation in very limited spaces. The aesthetics of the product allows for perfect integration on front panel equipments.

SOURIAU offers 3 main series of metallic circular connectors :

- JBX series : basic push-pull series for signal transmission
- JKX series : environmental version of the JBX series sealed to IP68
- JAX series : complementary range including coaxial contact layouts.

Contents

Where and why push-pull.....3
Selection guide.....4
JBX series
- *Main features - Part number system*.....5
- *Shell types and dimensions*.....6-8
- *Keying*.....9
- *Contact layouts*.....10-12
- *Options*.....13
- *Technical characteristics*.....14
- *Wiring and assembly instructions*.....15-19

JAX series
- *Main features - Part number system*.....20
- *Shell types and dimensions*.....21
- *Contact layouts*.....22
- *Suffix for cable outside diameter - Options*.....23
- *Technical characteristics*.....24
- *JAX camac series*.....25-26
- *Wiring and assembly instructions*.....27-30

JKX series
- *Main features - Part number system*.....31
- *Shell types and dimensions*.....32
- *Keying - contact layouts*.....33
- *Options*.....34
- *Technical characteristics*.....35
- *Wiring and assembly instructions*.....36-39

JBX series-sealed version size 2
- *Main features - Part number system*.....40
- *Shell types and dimensions*.....41
- *Keying - contact layouts*.....42
- *Technical informations*.....43

Accessories - Piece parts.....44-46
Toolings.....47-48
More about our know-how.....49
Requirement form.....50
Conversion table.....51

All dimensions are in mm

Where and Why **push-pull** ?

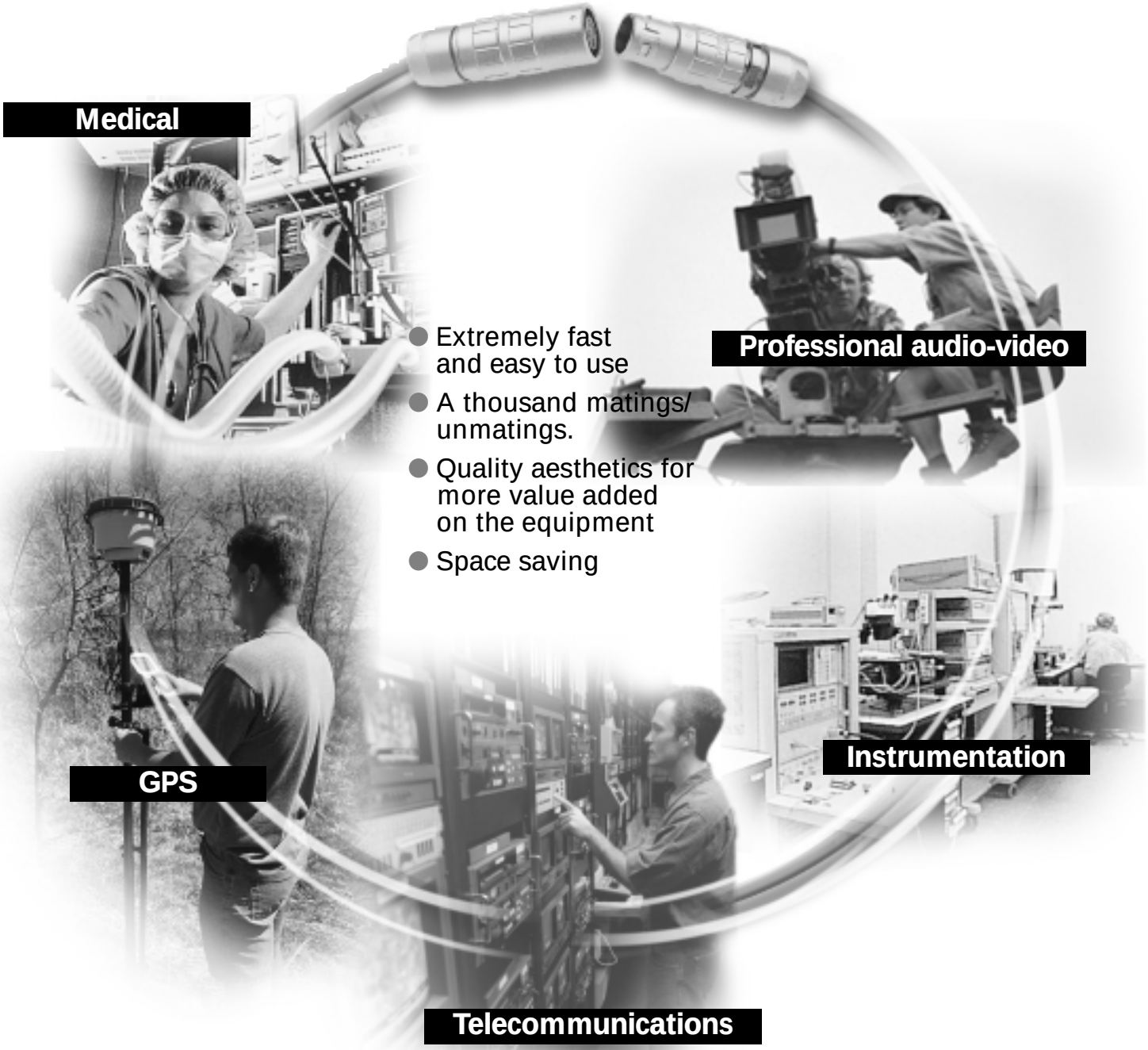

- Extremely fast and easy to use
- A thousand matings/ unmatings.
- Quality aesthetics for more value added on the equipment
- Space saving

Selection Guide

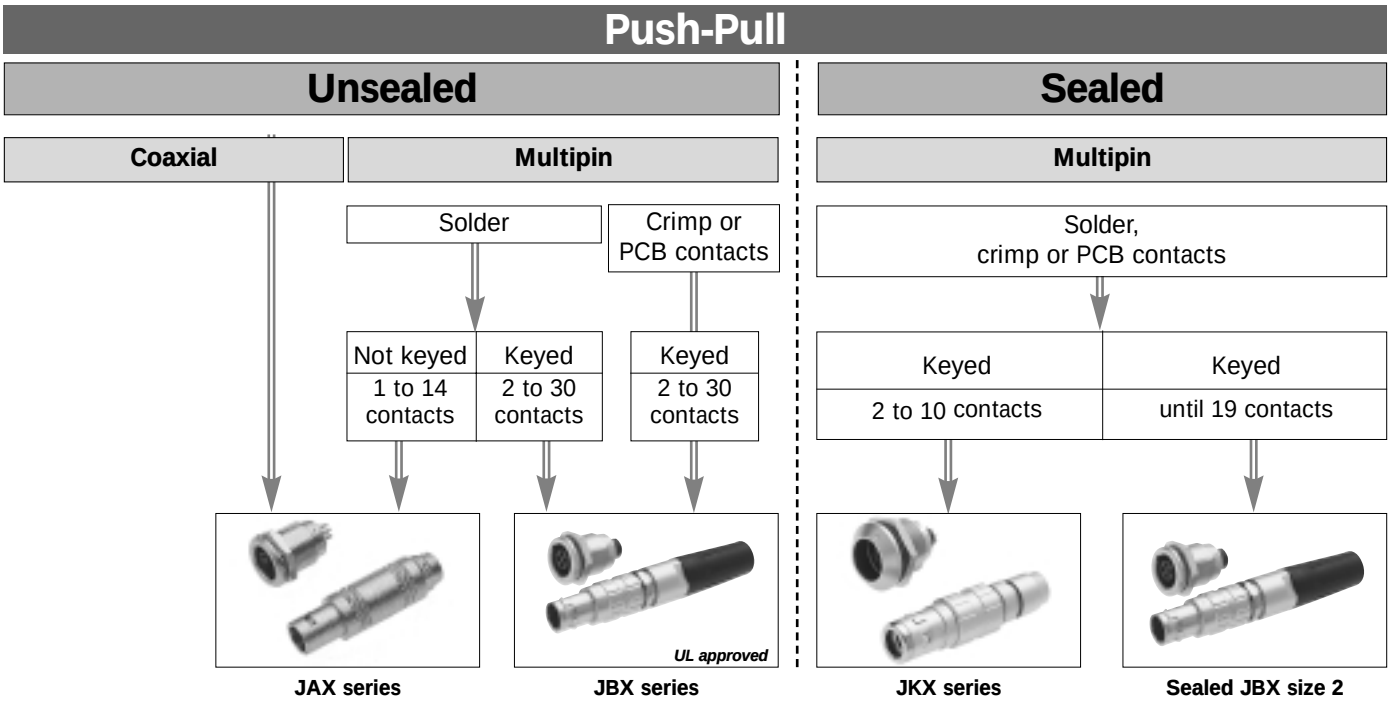

Shell material	Brass	Brass	Brass	Brass
Insulator material	Tefzel for coaxial contact Nylatron for multipin layout	Fortron Peek for layout with contacts of 0.5 mm of Ø	Fortron Peek for layout with contacts of 0.5 mm of Ø	Fortron Peek for layout with contacts of 0.5 mm of Ø
Shielding	Shielded (65 dB up to 100 MHz)	Shielded (55 dB up to 100 MHz)	Shielded (55 dB up to 100 MHz)	Shielded (55 dB up to 100 MHz)
Endurance	> 1000 cycles	> 1000 cycles	> 1000 cycles	> 1000 cycles
Current rating	up to 30 A	up to 30 A	up to 15 A	up to 30 A
Temperature range	- 40°C ; + 125°C (- 40°F ; + 257°F)	- 50°C ; + 125°C (- 58°F ; + 257°F)	- 50°C ; + 125°C (- 58°F ; + 257°F)	- 40°C ; + 80°C (- 40°F ; + 176°F)
Protection index	IP 40	IP 40	IP 68 when mated	IP 67
Specific version	JAX Camac connectors (coaxial, size 00) (optional sealed version : consult us)			

Push-pull locking system

The locking of the plug into the receptacle is achieved by a simple axial push on the outer shell.

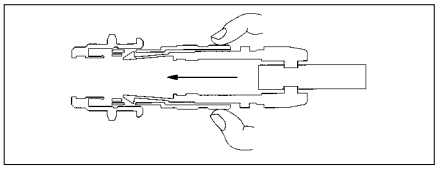

Connection cannot be broken by pulling the cable or any other parts of the plug than the outer shell.

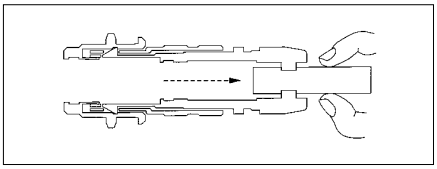

To unmate the plug from the receptacle, just pull axially the outer shell.

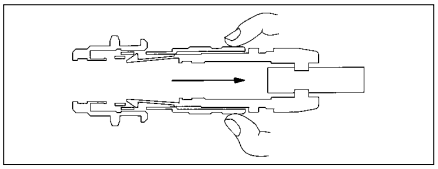

JBX Series

Key features

- Mechanically keyed : ensures correct polarisation and alignment.
- Contact layouts from 2 to 30 contacts.
- Wire gauges range from 30 AWG to 12 AWG.
- High contact density in a small space.
- Contact termination in either crimp, solder or PCB contacts.

User advantages

Blister packaging

6-collet cluster

Allows a wide range of cable diameter applications for a single connector. Reduces inventory variations

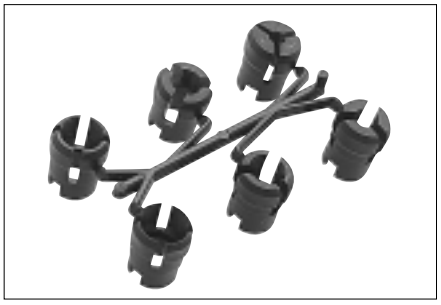

Removable contacts

Available crimp versions allow easier wiring and maintenance.

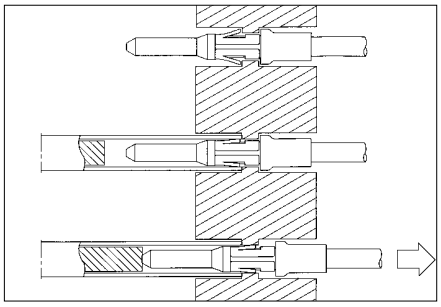

Part number system

Basic series	JBX	FD	1	G	05	M	C	S	D	S	M
Shell type	FD-FC-ER-EA-SR-PC-ED-EP-EZ										
Shell size	00 - 0 - 1 - 2 - 3										
Keying	G - J - A - B & customs are available										
Contact layout	02 ---------- 30										
Contact type	**M** : pin **F** : socket										
Contact termination	**C** : crimp ; **S** : solder ; **P*** : straight PCB tails ; **Q*** : 90° PCB tails ; **W** : 0.7 mm clipped solder										
Material & surface plating	**S** : Outer shell in brass alloy with chrome over nickel **N** : Outer shell in brass alloy with black plating										
	D : Obligatory suffix										
	S : Insulator in PPS **P** : insulator in PEEK										
Options	**M** : Connector with backnut for protective boot - Protective boot to order separately page 13 **R** : Red dot (possible for FD, FC, PC, SR, ER, ED, EZ only)										

* For receptacles with female contacts only

Shell types

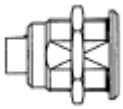

ER : fixed receptacle,front panel mounting, fixed front flange

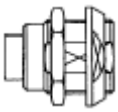

EA : fixed receptacle, back or front panel mounting, double nuts fixing (appropriate with 90° contacts for PCB)

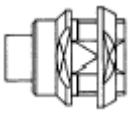

EP : fixed receptacle, back panel mounting, fixed rear panel flange (appropriate with 90° contacts for PCB)

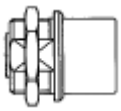

ED : fixed receptacle, protruding shell, fixed front flange

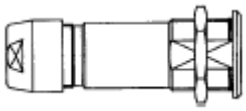

SR : fixed receptacle with cable clamping, front panel mounting, fixed front flange

PC : cable mounted receptacle

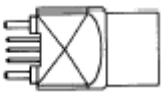

EZ : straight receptacle for PCB

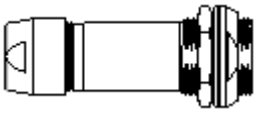

SA : fixed receptacle with cable clamping, front or back panel mounting

FN : straight plug with cable clamping & lanyard

FD : straight plug with cable clamping

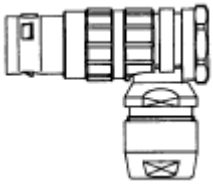

FC : 90° elbow ºplug with cable clamping

Dimensions*

ER : Fixed receptacle, front panel mounting*

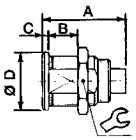

Size	00	0	1	2	3*
A	14	19	21	24	28
B	6	8	10	10	12
C	0.8	1.2	1.5	1.8	2.0
Ø D	8	10	14	18	22

*Lock washer not available

EA : Double nut receptacle*

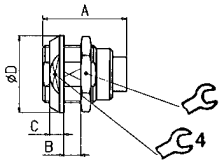

Size	0	1	2	3*
A	19	21	24	28
B	6.7	8.3	8	9.5
C	2.5	3.2	3.8	4.5
Ø D	12	16	20	24

*Lock washer not available

EP : Fixed receptacle, back panel mounting

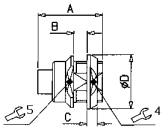

Size	0	1	2
A	19	21	24
B	4.5	6	6.5
C	2.5	3.2	3.8
Ø D	12	16	20

FD : Straight plug

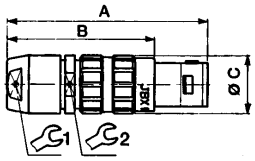

Size	00	0	1	2	3
A	31	39	45	52	62
B	23	29	34	40	47
Ø C	7	10	12	15	18

ED : Protruding receptacle

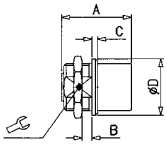

Size	0	1	2
A	19	21	24
B	3	4.5	6.3
C	1.2	1.5	1.8
Ø D	10	14	18

SR : Cable clamp receptacle*

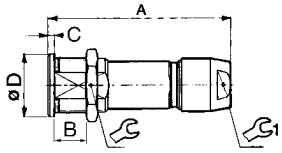

Size	0	1	2	3
A	38	43	50	59
B	8	10	10	12
C	1.2	1.5	1.8	2
Ø D	10	14	18	22

*Lock washer not available

FC : 90° elbow plug

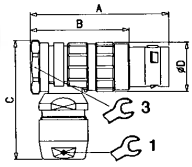

Size	0	1	2	3
A	30.5	36.5	42.5	50.5
B	20.5	25.5	30.5	35.5
C	29.5	33.5	36.5	45
Ø D	10	12	15	18

PC : Cable mounted receptacle

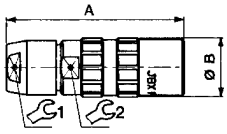

Size	0	1	2	3
A	38	43	50	59
Ø B	10	13	16	19.5

EZ : Receptacle for PCB

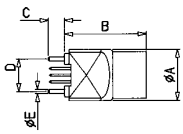

Size	0	1
Ø A	10	12
B	19	21
C	4	4
D	7.62 sq.	7.62 sq.
Ø E	1.1	1.1

*All dimensions in mm.

Dimensions

• Special custom shells

FN : Straight plug,
shell 0 with a lanyard

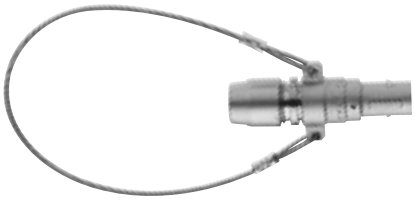

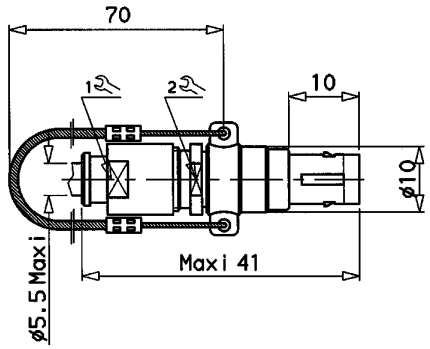

FM : 90° elbow plug,
shell 0 with a lanyard

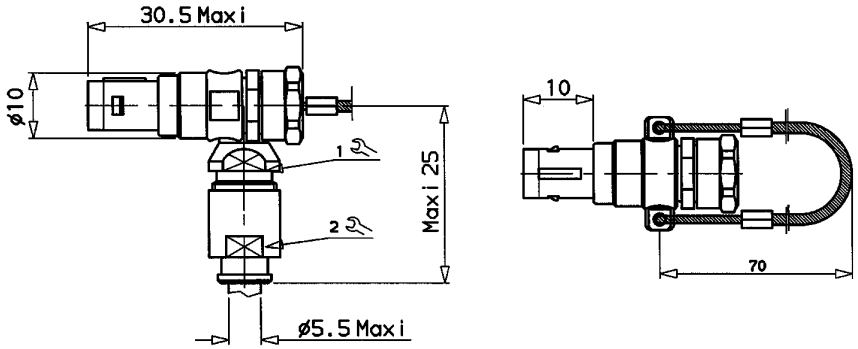

FF : Straight plug,
with no latching, size 1

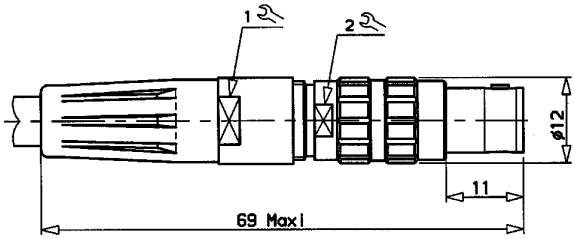

SA : fixed receptacle with cable clamping,
front or back panel mounting

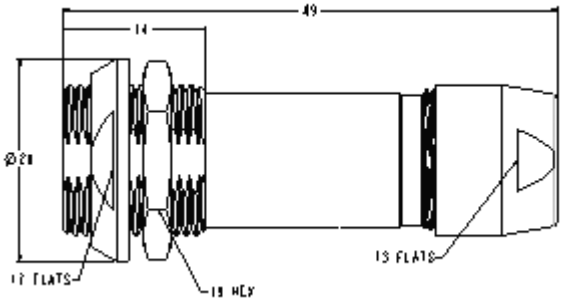

Keying

• Keying angles

JBX Series are mechanically keyed to ensure correct alignment of the inserts before the contacts mate.

«G» : standard keying

«J» : standard reverse gender keying ; plugs with socket contacts, receptacles with pin contacts.

*__G__ & __J__ are standard keying, but all keying configurations can use standard or reverse gender.

Key	G	J		A	B
		sizes 0 - 1	sizes 2 - 3		sizes 0 - 1
Keying angle	0°	45°	37.5°	30°	60°
Plug					
Receptacle					

• Keyed shells availability

Shell size	Key	ER	EA	ED	EP	EZ	SR	PC	FD	FC	FM	FN	SA
00	G	●							●				
0	G	●	●	●	●	●	●	●	●	●	●	●	●
	J	●	●						●	●			
	A	●							●				
	B	●							●				
1	G	●	●	●	●	●	●	●	●	●			
	J	●	●						●	●			
	A	●							●				
2	G	●	●	●	●		●	●	●	●			●
	J	●	●						●	●			
	A	●							●				
3	G	●	●				●	●	●	●			

● Available for JBX series, customs can be ordered contact Project Management.

Contact layouts

• Multi contact inserts

Shell size	Male insulator viewed from wiring side	Contact layout	Contact types available				Ø Contact	AWG		Max. current rating (A)*	Testing voltage (Vrms)*	Working voltage (Vdc / Vrms)*
			S solder	C crimp	P* straight PCB tails	Q* 90° PCB tails		Solder wire Max.	Crimp wire Max.			
00		04	S				0.5	30	-	2	1000	500/350
0		02	S	C	P	Q	0.9	24	20	10	1400	660/460
		03	S	C	P	Q	0.9	24	20	8	1300	600/420
		04	S	C	P	Q	0.7	26	22	7	1400	660/460
		05	S	C	P	Q	0.7	26	22	6.5	800	400/260
		06	S		P		0.5	28	-	2.5	680	320/220
		07	S		P		0.5	28	-	2.5	680	320/220
1		02	S	C	P		1.3	20	18	15	1600	760/530
		03	S	C	P	Q	1.3	20	18	12	1300	600/420
		04	S	C	P	Q	0.9	24	20	10	1900	900/630
		05	S	C	P	Q	0.9	24	20	9	1400	660/460
		06	S	C	P	Q	0.7	26	22	7	1400	660/460
		07	S	C	P	Q	0.7	26	22	7	1400	660/460
		08	S	C	P	Q	0.7	26	22	5	1200	600/420
		10	S				0.5	28	-	2.5	600	300/200

Inserts with fixed contacts (non removable contacts).

***** For receptacles with female contacts only.

Contact layouts

• Multi contact inserts

Shell size	Male insulator viewed from wiring side	Contact layout	Contact types available				Ø Contact	AWG		Max. current rating (A)*	Testing voltage (Vrms)*	Working voltage (Vdc / Vrms)*
			S solder	C crimp	P* straight PCB tails	Q* 90° PCB tails		Solder wire Max.	Crimp wire Max.			
2		02	S	C			2	16	12	30	2100	1000/700
		03	S	C			1.6	18	14	17	1700	830/560
		04	S	C	P	Q	1.3	20	18	15	2400	1000/800
		05	S	C	P	Q	1.3	20	18	14	1900	900/630
		06	S	C	P	Q	1.3	20	18	12	1900	900/630
		07	S	C	P	Q	1.3	20	18	11	1500	730/500
		08	S	C	P	Q	0.9	24	20	10	1700	830/560
		10	S	C	P	Q	0.9	24	20	8	1700	830/560
		12	S	C	P	Q	0.7	26	22	7	1700	830/560
		16	S	C	P	Q	0.7	26	22	6	1500	730/500
		18	S	C	P		0.7	26	22	5.5	1400	660/460
		19	S	C	P		0.7	26	22	5	1400	660/460
3		03	S	C			2	16	12	25	3600	1600/1200
		04	S	C			2	16	12	25	2500	1100/830

Inserts with fixed contacts (non removable contacts).

***** For receptacles with female contacts.

Contact layouts

• Multi contact inserts

Shell size	Male insulator viewed from wiring side	Contact layout side	Contact types available				Ø Contact	AWG		Max. current rating (A)*	Testing voltage (Vrms)*	Working voltage (Vdc / Vrms)*
			S solder	C crimp	P* straight PCB tails	Q* 90° PCB tails		Solder wire Max.	Crimp wire Max.			
3		**07**	S	C			1.6	18	14	15	2200	1000/730
		10	S	C			1.3	20	18	12	1400	660/460
		14	S	C	P		0.9	24	20	9	1700	830/560
		18	S	C	P		0.9	24	20	7	1400	660/460
		22	S	C	P		0.7	26	22	5.5	1200	560/400
		30	S	C	P		0.7	26	26	3.5	800	400/260

Inserts with fixed contacts (non removable contacts).
***** For receptacles with female contacts.

Note : Contacts are numbered counter clock wise in the plug and clock wise in the receptacle.

• Voltage Test Procedure

- **The testing voltage** corresponds to the maximum voltage the connector is able to withstand in normal climatic conditions. The value is about 75% of the electrical breakdown voltage. The testing voltage level can be reached several times in connectors life, but never applied for a continuous duration.

- **The working voltage** corresponds to the maximum voltage the connector is able to withstand continuously during its life time, in real environmental conditions, even with high temperature. The value is around 1/3 of the testing voltage.

• Maximum current rating

- This indicated maximum current rating corresponds to the maximum current that can be continuously applied to the connector mated pair, in normal climatic conditions.

Remark : If the current is applied on only one contact of the layout, then an increased current value can be achieved over a long duration.

Options

• Protective boot

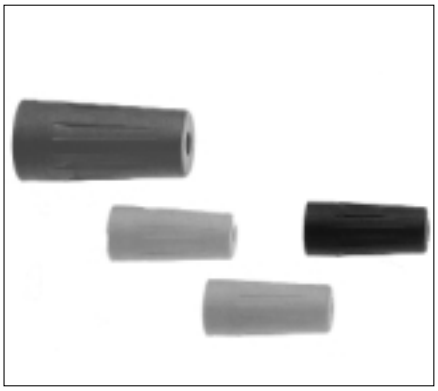

Part number	Shell size	Dimensions			
		Ø A	L	Ø Câble	
				min	Max.
JBX 00 MPN	**00**	1.5	15	1	3.5
JBX 0 MP*	**0**	2.2	20	1.5	5.5
JBX 1 MP*	**1**	2.6	25	2	7.5
JBX 2 MP*	**2**	4	30	3.5	9.7
JBX 3 MP*	**3**	5	35	4.9	12

*** Color code / In size 00, available only in black**

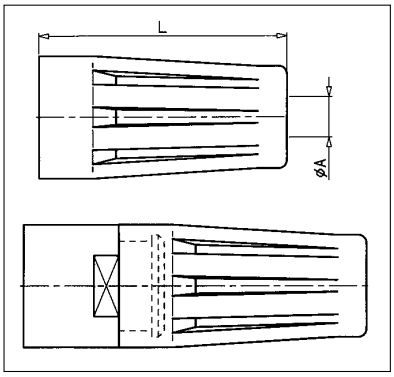

Color code	Colors
A	blue
B	white
G	grey
J	yellow
M	brown
N	black
R	red
V	green
O	orange

Material :

ELASTOLLAN (PUR)

Working temperature :

- 40°C ; + 80°C
- 40°F ; + 176°F

Parts that require a protective boot need to be ordered with an M suffix, see page 5. Protective boots are ordered separately.

With each JBX connector, one protective boot can accept multiple cable diameters thus the end-user can use various cable diameters without the need of multiple part numbers.

• **Receptacle caps :** an effective protection against dust

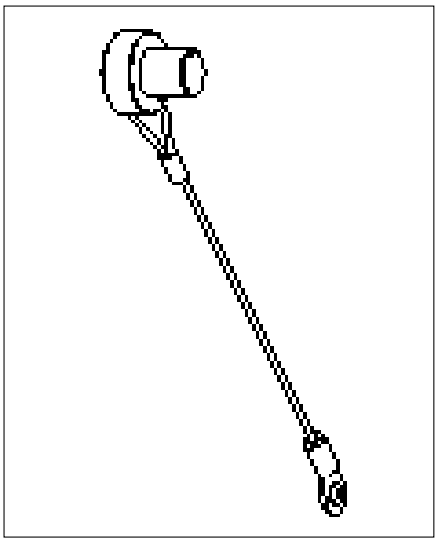

Part number	Ø
JBX BR0	12 mm
JBX BR1	14 mm
JBX BR2	17 mm
JBX BR3	20 mm

Technical characteristics

• Material and treatment

UL approved - homologation file E 169916

Component	Material	Standard		Surface treatment (µm)		
		ISO	ASTM	Cr	Ni	Au
Outer shell and collet nut	Brass	CuZn40Pb3	C38500/C3600	0.1 - 0.6	5 - 8	-
Latching sleeve & metal collet	Brass	CuZn40Pb3	C38500/C3600	-	5 - 8	-
Shielding ring	Brass	CuZn40Pb3	C38500/C3600	-	3 - 7	-
Nut	Brass	CuZn40Pb3	C38500/C3600		5 - 8	-
Half bushes	Brass	CuZn40Pb3	C38500/C3600	-	5 - 8	-
Socket contact (1)	Copper Nickel-	CuNi1Pb1P	CDA C 19150	-	3 - 5	0.5
Pin contact (1)	Brass	CuZn35Pb2	C35300/C3600	-	3 - 5	0.5
Clip	Beryllium copper	CuBe1,9	C17200	-	-	-

(1) Gold thickness as per MIL-G-45204C type 1, class 00.

Component	Material	Color	Working Temperature	
Insert	PPS + 40%GF or PEEK + 15%GF	black brown	- 65°C + 200°C - 50°C + 250°C	- 85°F + 392°F - 58°F + 482°F
Plastic collet	PA 6/6 + MoS2	black	- 55°C + 125°C	- 67°F + 257°F

• Mechanical and climatics

Characteristics	Values	Standard	Method
Endurance	> 1000 cycles (except for 0.7 mm crimp contacts for which endurance is limited to 500 cycles)	MIL-STD 1344A	2016.1
Shock	50 g, duration 6 ms ; contact Ø 0.7 mm and 0.9 mm 100 g, duration 6 ms ; contact Ø 1.3 mm - 1.6 mm and 2 mm	MIL-STD 1344A	2004.1
Vibrations	10 to 2000 Hz γ = 15 g, contact Ø 0.7 mm and 0.9 mm γ = 20 g, contact Ø 1.3 mm - 1.6 mm and 2 mm	MIL-STD 1344A	2005.1
Protection index	IP 40	CEI 529	
Operating temperature	with plastic collets } - 55°C + 125°C / - 67°F + 257°F	-	-
	with optional metal collets } - 55°C + 200°C / - 67°F + 392°F	-	-
Gas	H_2S : 100 ppb ± 20 ppb SO_2 : 500 ppb ± 100 ppb	IEC 68-2-60	test Ke method 1
Radiation stability	10^8 Rad	-	-

Wiring and assembly instructions

• Panel cutout

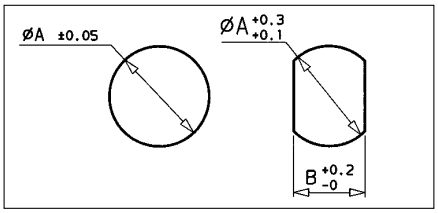

Size	00	0	1	2	3
Ø A	7.1	9.1	12.1	15.1	18.1
B	6.4	8.3	10.6	13.6	16.6

• Removable contacts

Crimp contacts

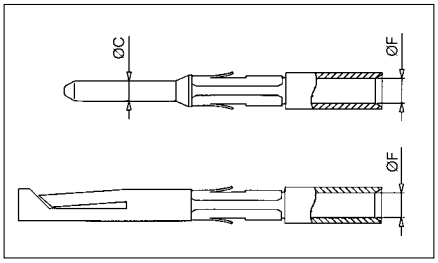

Contact		Usable cables			Max. current rating (A)	Contact resistance (mΩ)	Endurance (number of cycles)
Ø C	Ø F	Core section (mm2) min	Core section (mm2) Max.	AWG			
0.7	0.85	0.129	0.326	22-24-26	7	5	500 Max.
0.9	1.1	0.205	0.518	20-22-24	10	3.5	> 1000
1.3	1.4	0.326	0.823	18-20-22	15	3	> 1000
1.6	1.9	0.823	2.081	14-16-18	17	2.5	> 1000
2.0	2.4	1.309	3.309	12-14-16	30	2.5	> 1000

Solder contacts

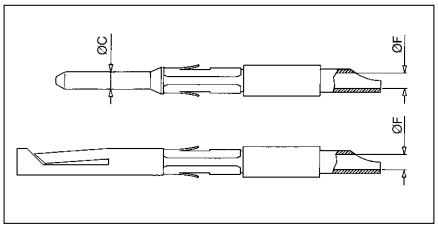

Contact		Usable cables			Max. current rating (A)	Contact resistance (mΩ)	Endurance (number of cycles)
Ø C	Ø F	Core section (mm2) min	Core section (mm2) Max.	AWG			
0.7	1.0	-	0.3	22.0	7.0	5.0	500 Max.
0.9	0.8	-	0.21	24	10	3.5	> 1000
1.3	1.1	-	0.60	20	15	3	> 1000
1.6	1.5	-	0.93	18	17	2.5	> 1000
2	1.9	-	1.34	16	30	2.5	> 1000

The conductor bucket on the solder contacts is designed with an angle to form a cup into which the solder can flow easily.

• Fixed contacts

Solder contacts

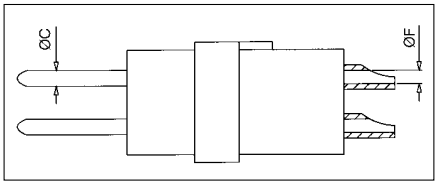

Contact		Shell size	Usable cables		Max. current rating (A)	Contact resistance (mΩ)	Endurance (number of cycles)
Ø C	Ø F		Core section (mm^2) Max.	AWG			
0.5	0.4	00	0.06	30	5	10	> 1000
	0.5	0 - 1	0.096	28			
0.7	0.63	0 - 1 - 2 - 3	0.15	26	7	5	> 1000

Contacts for PCB

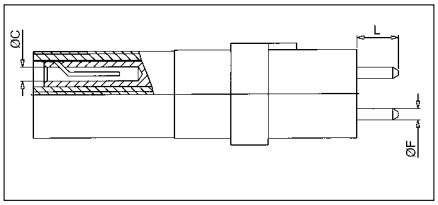

Contacts for PCB	Contact length dimensions “L”
PCB tail length size 0	dimension “L” 5.5 mm
0.7 mm female PCB tail length size 0	dimension “L” 3.5 mm
0.7 mm female PCB tail length size 1	dimension “L” 4.0 mm
0.7 mm female PCB tail length size 2	dimension “L” 6.0 mm
0.7 mm female PCB tail length size 3	dimension “L” 6.0 mm
0.9 mm female PCB tail length size 0	dimension “L” 3.5 mm
0.9 mm female PCB tail length size 1	dimension “L” 4.0 mm
0.9 mm female PCB tail length size 2	dimension “L” 6.0 mm
4.3 mm female PCB tail length size 1	dimension “L” 4.0 mm, dimension “F” 0.7 mm
1.3 mm female PCB tail length size 2	dimension “L” 6.0 mm, dimension “F” 0.7 mm
1.3 mm female PCB tail length size 3	dimension “L” 6.0 mm, dimension “F” 0.7 mm

Wiring and assembly instructions

• Cable stripping for connectors with crimp contacts

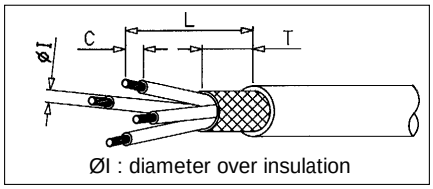

Shell size	Ø contacts	Ø I	Stripping for FD, SR, PC			Stripping for FC		
			L	C	T	L	C	T
0	0.7	≤ 1.35	15	4	7	19	4	7
		> 1.35		5.5			5.5	
	0.9	≤ 1.6	15	4	7	19	4	7
		> 1.6		5.5			5.5	
1	0.7	≤ 1.35	16	4	8	22	4	8
		> 1.35		5.5			5.5	
	0.9	≤ 1.6	16	4	8	22	4	8
		> 1.6		5.5			5.5	
	1.3	≤ 2.1	16	4	8	22	4	8
		> 2.1		5.5			5.5	
2	0.7	≤ 1.35	19	4	9	28	4	9
		> 1.35		5.5			5.5	
	0.9	≤ 1.6	19	4	9	28	4	9
		> 1.6		5.5			5.5	
	1.3	≤ 2.1	19	4	9	28	4	9
		> 2.1		5.5			5.5	
	1.6	≤ 2.6	21	5.5	9	28	5.5	9
		> 2.6		7			7	
	2.0	≤ 3.2	21	5.5	9	28	5.5	9
		> 3.2		7			7	
3	0.7	≤ 1.35	25	4	10	35	4	10
		> 1.35		7			7	
	0.9	≤ 1.6	25	4	10	35	4	10
		> 1.6		7			7	
	1.3	≤ 2.1	25	4	10	35	4	10
		> 2.1		7			7	
	1.6	≤ 2.6	27	5.5	10	35	5.5	10
		> 2.6		8.5			8.5	
	2.0	≤ 3.2	27	5.5	10	35	5.5	10
		> 3.2		8.5			8.5	

• Cable stripping for connectors with solder contacts

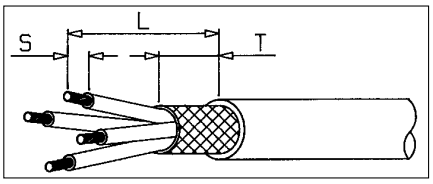

Shell size	Ø Contacts	Stripping for FD, SR, PC			Stripping for FC		
		L	S	T	L	S	T
00	0.5	9	2	4	/	/	/
0	0.5	11	2	7	16	2	7
	0.7	12	3	7	16	3	7
	0.9	12	3	7	16	3	7
1	0.5	12	2	8	19	2	8
	0.7	13	3	8	19	3	8
	0.9	13	3	8	19	3	8
	1.3	13	3.5	8	19	3.5	8
2	0.7	16	3	9	25	3	9
	0.9	16	3	9	25	3	9
	1.3	16	3.5	9	25	3.5	9
	1.6	18	4	9	25	4	9
	2	18	4	9	25	4	9
3	0.7	20	3	10	30	3	10
	0.9	20	3	10	30	3	10
	1.3	20	3.5	10	30	3.5	10
	1.6	22	4	10	30	4	10
	2	22	4	10	30	4	10

Wiring and assembly instructions :

STRAIGHT PLUG

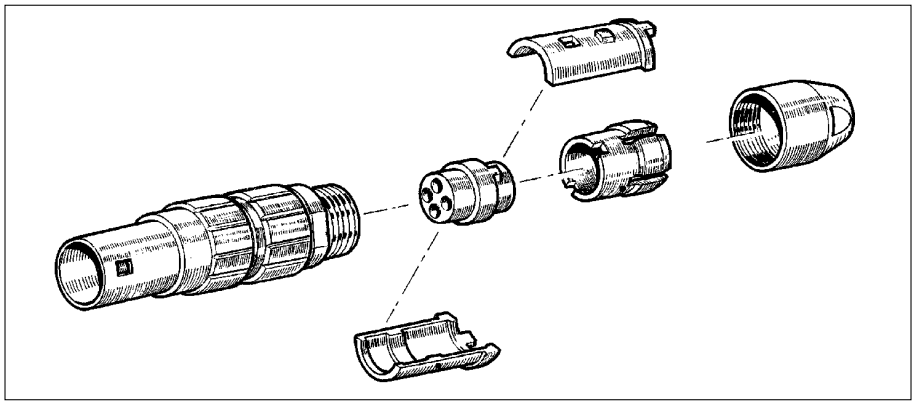

• Connector preparation

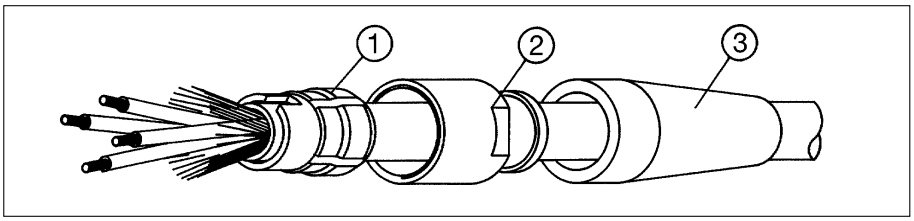

1 - Select the proper collet. (see page 19)

2 - Slide the protective boot ③ the backnut ② and the collet ① over the cable. Strip end of cable (see pg. 17).

3 - If a shielded cable is used fold the braid back over the collet.

• Contacts wiring : crimp contacts

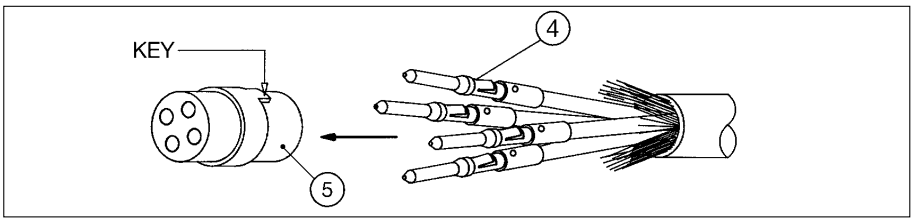

1 - Select the proper crimping tool and locator. (see page 48)

2 - Adjust the crimping tool based on wire size "AWG". (See wire size and crimp tool settings on the back of the locator)

3 - Crimp the contacts ④ then insert the contact into the insulator until the clip is fully seated and cannot be removed.

• Contacts wiring : solder contacts

Fixed solder contacts 0.5 mm and 0.7 mm	Removable solder contacts from 0.9 mm to 2 mm
1 - Insert wire into solder cup and solder.	1 - Insert wire into solder cup and solder. 2 - Insert contact into the insulator until the clip is fully seated and cannot be removed.

• Connector assembly

1 - Position 2 half bushings ⑥ on either side of the insulator.

2 - Confirm that the key on the insulator ⑤ appears through the window in the one half bushing.

3 - Align the key slot on the collet with the keys on the half bushings.

4 - Insure the cable shield is still folded back and under the collet.

5 - Insert the insulator subassembly ① ④ ⑤ & ⑥ into the connector housing ⑦.

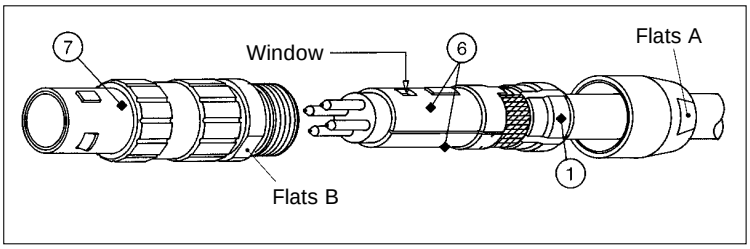

6 - Make sure the window on the half bushing ⑥ is aligned with the key way on the connector housing ⑦.

7 - Apply thread lock to back nut ②.

8 - Attach the back nut to the connector housing ⑦

9 - Use the correct size wrench, see page 19.

10 - Place the wrenches on the flats A and B. Tighten the back nut ② per the torque spec on page 19.

11 - Install the protective boot if applicable.

Wiring and assembly instructions : 90° ELBOW PLUG

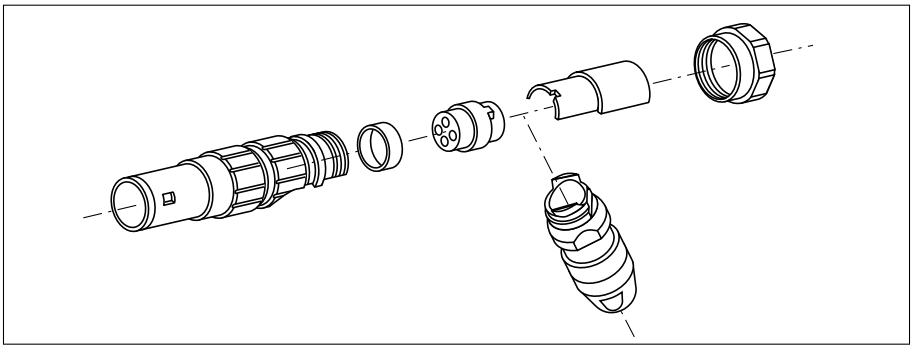

• Connector preparation

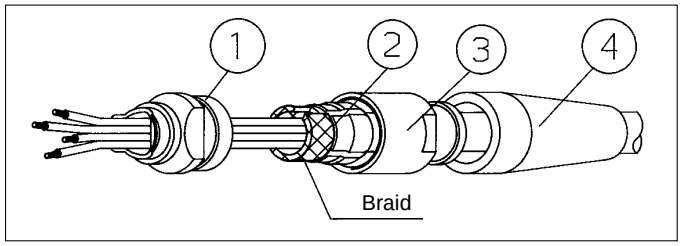

1 - Select the proper collet (see page 19).

2 - Slide the protective boot ④, the backnut ③, the collet ② and the elbow outlet ① over the cable. Strip end of cable (see pg. 17).

3 - If a shielded cable is used, fold the braid back over the collet ②.

4 - Align the keys in the elbow outlet ① with the key slot in the collet.

5 - Apply thread lock to the backnut ③.

6 - Install the back nut ③ and tighten until it bottoms.

• Contacts wiring : crimp contacts

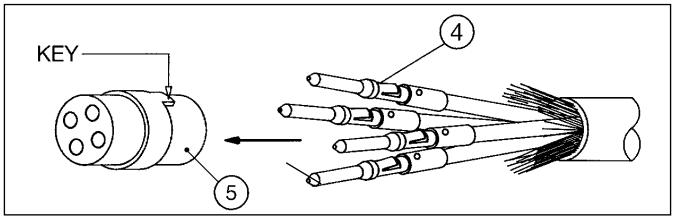

1 - Select the proper crimping tool and locator. (see page 48)

2 - Adjust the crimping tool based on wire size "AWG". (See wire size and crimp tool settings on the back of the locator)

3 - Crimp the contacts ④ then insert the contact into the insulator until the clip is fully seated and cannot be removed.

• Contacts wiring : solder contacts

Fixed solder contacts 0.5 mm and 0.7 mm	Removable solder contacts from 0.9 mm to 2 mm
1 - Insert wire into solder cup and solder.	1 - Insert wire into solder cup and solder. 2 - Insert contact into the insulator until the clip is fully seated and cannot be removed.

• Connector assembly : 90 degree plug

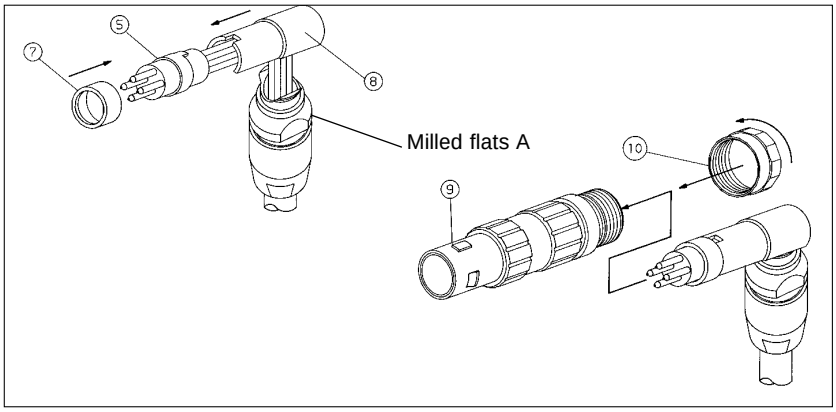

1 - Position the ring ⑦ over the insulator.

2 - Align the key on the insulator ⑤ with the key way on the spacer ⑧ and insert the insulator into the spacer.

3 - Insert the insulator sub-assembly into the connector housing ⑨ insuring the flats on the elbow outlet ① are facing the retaining nut ⑩.

4 - Apply thread lock to retaining nut ⑩.

5 - Tighten the retaining nut ⑩ to the recommended torque on page 19.

Wiring and assembly instructions

• Collet selection according to cable diameters

4 or 6 collets per shell size are supplied to allow the use of a wide range of cable diameters for each connector. The cable diameters given on this chart are the minimum and maximum diameters of cable jacket.

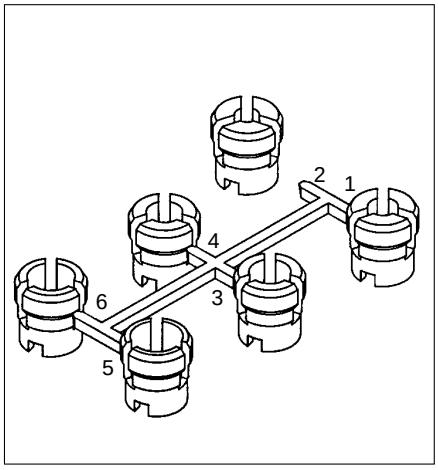

Collet number	Cable diameter				
	Shell size 00	Shell size 0	Shell size 1	Shell size 2	Shell size 3
1	1.1 - 1.9	1.5 - 2.5	2.0 - 2.5	3.5 - 4.7	4.9 - 6
2	2 - 2.8	2.6 - 3.5	2.6 - 3.5	4.8 - 5.7	6.1 - 7.2
3	2.9 - 3.5	3.6 - 4.5	3.6 - 4.5	5.8 - 6.7	7.3 - 8.4
4	-	4.6 - 5.5	4.6 - 5.5	6.8 - 7.7	8.5 - 9.6
5	-	-	5.6 - 6.6	7.8 - 8.7	9.7 - 10.8
6	-	-	6.7 - 7.5	8.8 - 9.7	10.9 - 12.0

*Cable jacket must be inserted at least halfway through the collet.
Metal collets are available as an option in size 0, 1, 2, & 3.

• Coupling torques

Tools (jaw dimensions)	7 x 0.5	9 x 0.6	12 x 1	15 x 1	18 x 1	Advised torques* in Nm				
Size	00	0	1	2	3	00	0	1	2	3
	7	11	14	17	21	0.5	0.7	1.3	1.7	2
1	6	8	10	13	15	0.7	0.8	1	1.5	2
2	6	9	11	14	16	0.7	0.8	1	1.5	2
3	-	10	12	15	17	-	0.4 to 0.5		0.5 to 0.7	
4	-	10	13	17	20	0.5	0.7	1.3	1.7	2
5	-	9	13	15	-	-	-	-	-	-

Torque values are the maximum allowable for each connector size.
Torque values will vary due to the type and size of the cable used

*Apply thread lock to back nut prior to assembly.

Note : All the tooling numbers refer to the drawings pages 7 and 8.

Metal collet available for all sizes

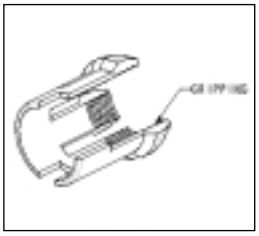

Discreet application based on cable diameter.

• Shielding

Tested according to MIL-STD 1344 A, method 3007

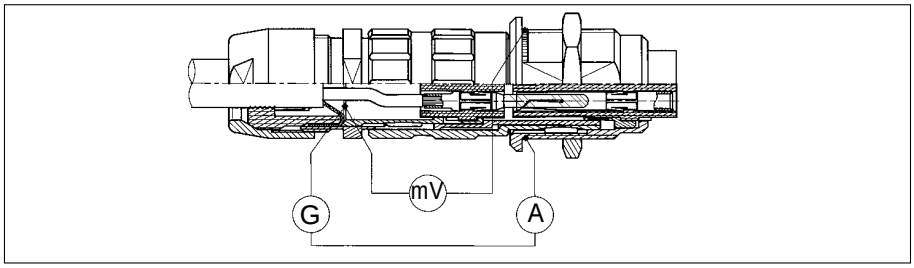

Shell size	Electrical continuity (mΩ)
00	4.5
0	4
1	3
2	2.5
3	2.5

JAX Series

Key features

- Hermaphroditic insert : prevents mismatings.
- Multipin connectors : contact layouts from 1 to 14.
- Wire gauges range from 26 AWG to 16 AWG.
- High contact density in a small space.
- Coaxial contacts : 50 Ω and 75 Ω impedance.

User advantages

Large range of blind mate coaxial connectors

Part number system

Basic series		**JAX**	**F**	**2**	**M3**	**D080**	**B**
Shell type	**F - RA - PC**						
Shell size	**00 - 0 - 1 - 2 - 3**						
Contact layout	**- multi contacts** : see designation table page 22 **- coaxial** : see designation table page 22						
Suffix for cable outside diameter, see table page 23							
B : obligatory suffix							

Shell types

RA : fixed receptacle,
front panel mounting, nut fixing

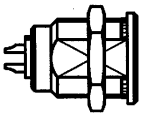

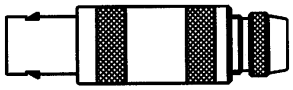

PC : free receptacle,

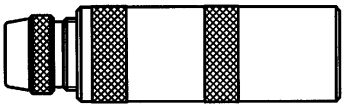

F : straight plug
with cable clamping

Dimensions

Straight plug - ref. F

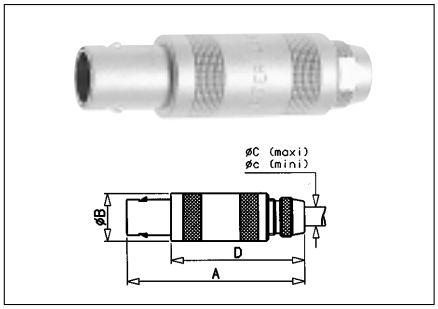

Size	00	0	1	2	3
A	25	34	43	51	61
Ø B	6.5	9	12	15	18
Ø C	3.2	4.2	6.2	8.2	11.2
Ø c	2.2	2.2	2.2	4.2	4.2
D	17	24	32	39	46

Round flange - ref. RA

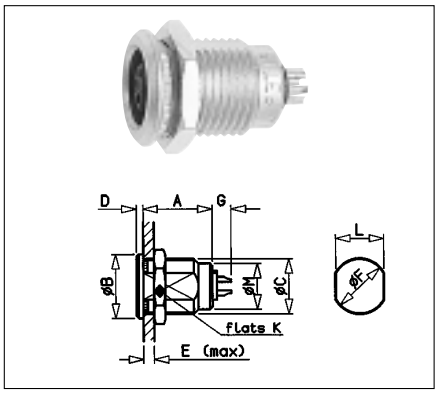

Size	00	0	1	2	3
A	11	13.3	15	16.5	20.5
Ø B	8	10	14	18	22
Ø C	M7 x 0.5	M9 x 0.6	M12 x 1	M15 x 1	M18 x 1
D	1	1.2	1.5	1.8	2
E	6.5	7	8	8	11
Ø F	7.1	9.2	12.2	15.2	18.2
G	3.5	3.5	3	5	4.5
K	9	11	14	17	21
Ø M	6	8	10	13	16
L	6.4	8.3	10.6	13.6	16.6

In line plug - ref. PC

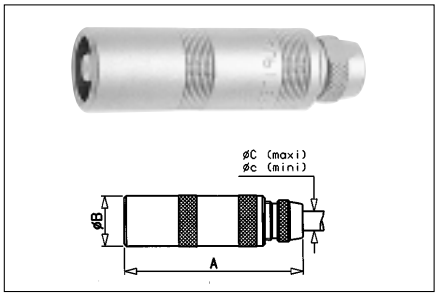

Size	00	0	1	2	3
A	24	33	40	49	59
B	6.5	9	12	15	18
C	3.2	4.2	6.2	8.2	11.2
c	2.2	2.2	2.2	4.2	4.2

Contact layouts

• Multi contacts inserts

Shell size	Plug insulator viewed from wiring side	Contact layout	Desi-gnation	Ø Contact	Max current rating (A)	Testing voltage (Vrms)	Working voltage (Vdc / Vrms)
00	1 x Ø 1.3	1	UM (plug) UF (receptacle)	1.3	8	900	400 / 300
0	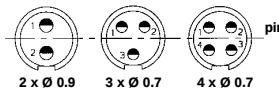 pin contact 2 x Ø 0.9 3 x Ø 0.7 4 x Ø 0.7	2	M2	0.9	10	1500	700 / 500
		3	M3	0.7	7	1050	500 / 350
		4	M4	0.7	7	1050	500 / 350
1	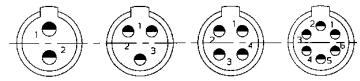 pin contact 2 x Ø 1.3 3 x Ø 0.9 4 x Ø 0.9 6 x Ø 0.7	2	M2	1.3	15	1200	600 / 400
		3	M3	0.9	10	1200	600 / 400
		4	M4	0.9	10	1200	600 / 400
		6	M6	0.7	7	1200	600 / 400
2	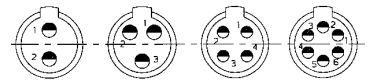 pin contact 2 x Ø 1.6 3 x Ø 1.6 4 x Ø 1.3 6 x Ø 1.3	2	M2	1.6	20	1800	600 / 400
		3	M3	1.6	15	1500	600 / 400
		4	M4	1.3	15	1500	600 / 400
		6	M6	1.3	12	1500	600 / 400
	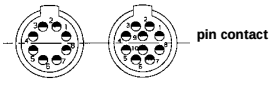 pin contact 8 x Ø 0.9 10 x Ø 0.9	8	M8	0.9	9	750	800 / 600
		10	M10	0.9	7	750	700 / 500
3	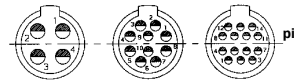 pin contact 4 x Ø 2 10 x Ø 1.3 14 x Ø 0.9	4	M4	2	18	1500	700 / 500
		10	M10	1.3	9	1050	500 / 350
		14	M14	0.9	7	1050	500 / 350

Designation to use in the part-number system, page 20

• Coaxial inserts

Shell size	Insulator	Contact impedance (Ω)	Desi-gnation	Ø Contact	Max current rating (A)	Testing voltage (Vrms)	Working voltage (Vdc / Vrms)
00		50	C50	0.7	5	1800	800 / 600
0		50	C50	1.3	10	2300	1100 / 780
		50S	C50S	0.9	6	2300	1100 / 780
1		50	C50	1.6	12	2300	1100 / 780
		75	C75	1.3	10	2900	1400 / 980
2		50	C50	2	15	2900	1400 / 980
		75	C75	1.6	12	3900	1800 / 1300
3		50	C50	3	26	5700	2800 / 1900
		75	C75	2	15	6300	3000 / 2100

Designation to use in the part-number system, page 20.

Suffix for cable outside diameter

Shell size	Accomodation of cable diameter	Obligatory suffix
00	From **1.5 mm** to **2.2 mm** From **2 mm** to **3.2 mm**	**D020** **D030**
0	From **2 mm** to **3.2 mm** From **3 mm** to **4.2 mm**	**D030** **D040**
1	From **2 mm** to **3.2 mm** From **3 mm** to **4.2 mm** From **4 mm** to **5.2 mm** From **5 mm** to **6.2 mm**	**D030** **D040** **D050** **D060**
2	From **4 mm** to **5.2 mm** From **5 mm** to **6.2 mm** From **6 mm** to **7.2 mm** From **7 mm** to **8.2 mm**	**D050** **D060** **D070** **D080**
3	From **4 mm** to **5.2 mm** From **5 mm** to **6.2 mm** From **6 mm** to **7.2 mm** From **7 mm** to **8.2 mm** From **8 mm** to **9.2 mm** From **9 mm** to **10.2 mm** From **10 mm** to **11.2 mm**	**D050** **D060** **D070** **D080** **D090** **D100** **D110**

Designation to use in the part number system, page 20

Options

• Caps

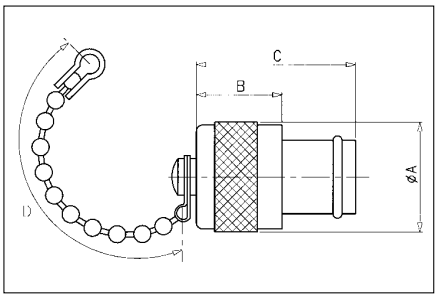

Part number	A	B	C	D
JAX RA 120	12	11	20	70
JAX RA 220	15	11	21	70
JAX RA 320	18	14	26	70

Material: Nickel-chromium brass. Neoprene seal.

Technical characteristics

• Material and treatment

Component	Material	Standard		Surface treatment (µm)		
		ISO	ASTM	Cr	Ni	Au
Outer shell and collet nut	Brass	CuZn40Pb3	C38500	0.1 - 0.6	5 - 8	-
Latching sleeve	Brass	CuZn40Pb3	C38500	-	5 - 8	-
Shielding ring	Brass	CuZn40Pb3	C38500	-	3 - 7	-
Nut	Brass	CuZn40Pb3	C38500		5 - 8	-
Half bushes	Brass	CuZn40Pb3	C38500	-	5 - 8	-
Socket contact (1)	Cupro-nickel	CuNi1Pb1P	-	-	3 - 5	0.5
Pin contact (1)	Brass	CuZn35Pb2	C35300	-	3 - 5	0.5
(1) Gold thickness as per MIL-G-45204C type 1, class 00.						

Component	Material	Color	Temperature withstanding	
Insert	TEFZEL (coaxial connector)	White	- 70°C ; + 150°C	- 94°F ; + 302°F
	Nylatron GS (multipin connector)	Grey	- 40°C ; + 125°C	- 40°F ; + 257°F

• Mechanical and climatics

Characteristics	Values	Standard
Endurance	1000 cycles	
Protection index	IP 40	CEI 529
Operating temperature	- 40°C ; + 125°C / - 40°F ; + 257°F	

These 2 pages describe the JAX Camac series, size 00. These connectors are often used on jumpers for delay lines in Nuclear Physics due to their size and simple handling in congested areas. For Nuclear Physics, our connectors meet the standard NIM-CAMAC*. Moreover, JAX coaxial connectors are suitable for many other industrial and scientific applications such as medical, microwave communications, pocket transmitters, input/output on electronic modules.

NIM-CAMAC* configuration (4 GHz - 50 Ω)

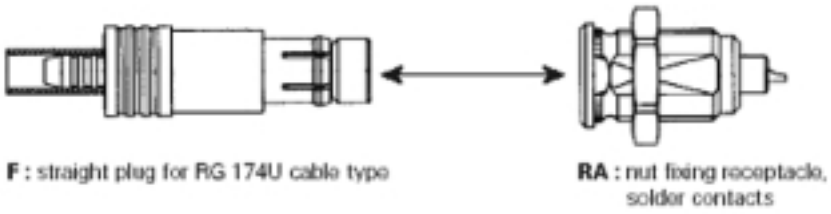

* NIM-CAMAC : Nuclear Instrumentation Module / Computer Automated Measurement and Control

Dimensions and part-numbers

P/N : JAX F 00 C50 RG 174 US
Straight plug for RG174U cable

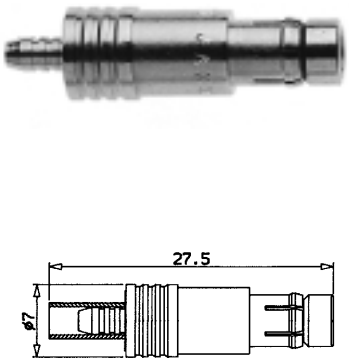

Weight : 3.5 g

P/N : JAX RA 00 C50S
Fixed front flange receptacle, solder contacts

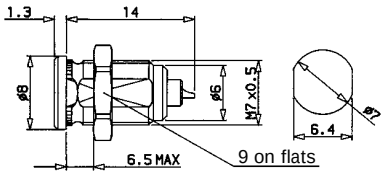

Weight : 2.5 g

P/N : JAX 00 MDPN
Protective boot

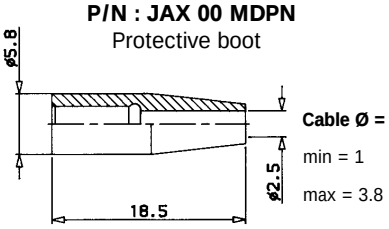

Weight : 0.2 g
Temperature = - 40°C ; + 80°C

P/N : JAX RA 0018
RF screening cap

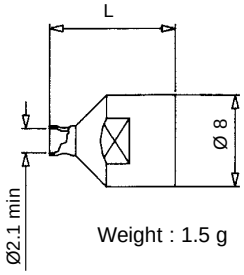

Weight : 1.5 g

Technical data

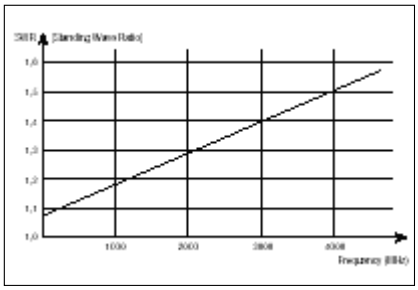

Specific characteristics	Values
Endurance	5000 cycles
Operating temperature	- 70°C ; + 200°C - 94°F ; + 392°F
Plating on metal shell	Ni = 3 - 7 µm
Insert	PTFE

Delay lines

• Cable Nr 96-CEI-50-2-1 (RG 174U)

fitted with NIM-CAMAC connectors at both ends

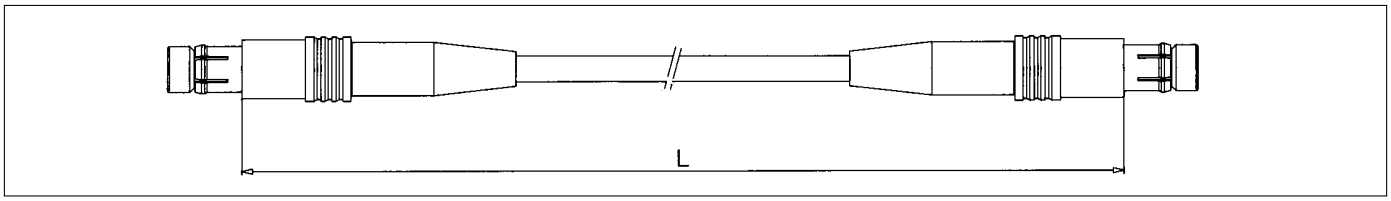

L : Length which defines delay in ns of cable jumpers

P/N	Delay (ns)	Tolerance (%)	L *
JAX L 00 C50 C11 R005	0.5	5	100
JAX L 00 C50 C11 R010	1	5	200
JAX L 00 C50 C11 R020	2	2.5	400
JAX L 00 C50 C11 R030	3	1.7	600
JAX L 00 C50 C11 R040	4	1.3	800
JAX L 00 C50 C11 R050	5	1	1000
JAX L 00 C50 C11 R060	6	1	1200
JAX L 00 C50 C11 R080	8	1	1600
JAX L 00 C50 C11 R100	10	1	2000
JAX L 00 C50 C11 R160	16	0.6	3200

* Average length, for information only

• Crimping tool

P/N : JX2W1010A9

Wiring and assembly instructions

• Panel cutout

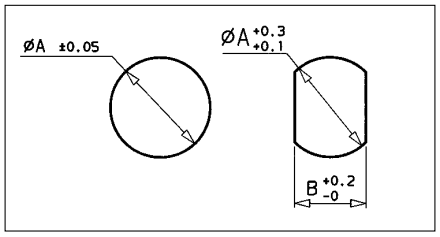

Size	00	0	1	2	3
A	7.1	9.1	12.1	15.1	18.1
B	6.4	8.3	10.6	13.6	16.6

• Contacts

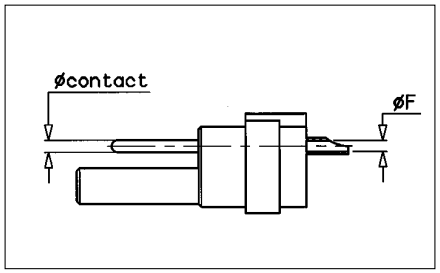

Ø Contact	Usable cables (AWG)	Ø F
0.7	26	0.6
0.9	24	0.8
1.3	20	1.1
1.6	18	1.5
2.0	16	1.9

• Cable stripping for connectors with multi contacts (solder contacts)

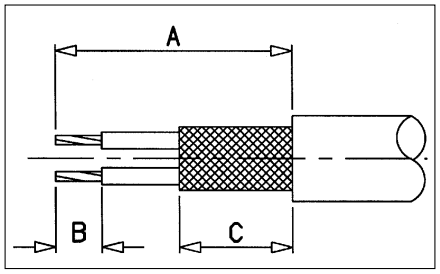

Size	A	B	C *
0	9	4	7
1	12	4	8
2	17	4	9
3	19	4	10

* If shielded cable

• Cable stripping for connectors with coaxial contacts / single contacts

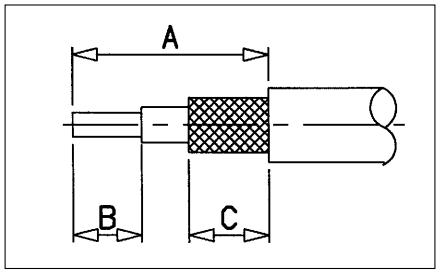

Size	A	B	C
00	15	4	15
0	15.5	4.5	6
1	18.5	6.5	6
2	25	7	7
3	23	7.5	10

Wiring and assembly instructions : MULTIPIN PLUGS SIZES 0, 1, 2, 3

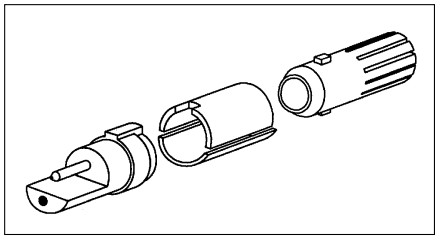

- **Cable stripping :** see page 27

- **Connector preparation and contacts wiring**

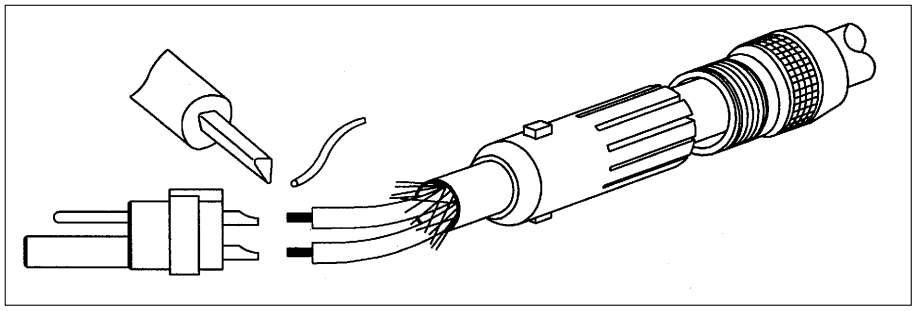

1 - Slide the backnut and the collet onto the cable.

2 - Terminate the bucket contacts using solder method.

- **Connector assembly**

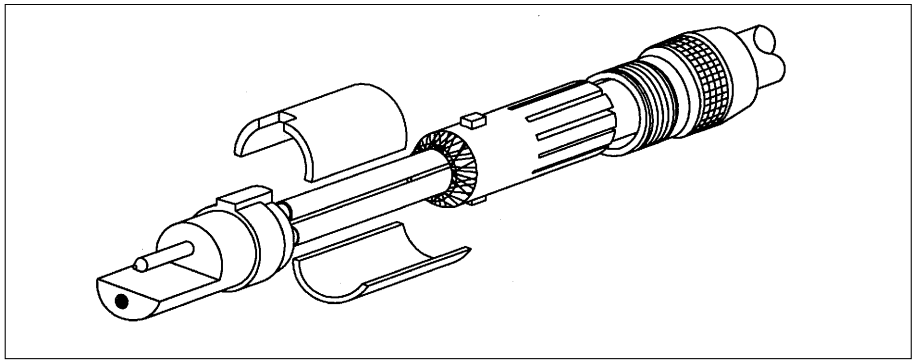

3 - For shielded cable : pull back the collet up to external sheath extremity.

4 - Comb out the screen and fold back over the collet end.

5 - Position two half bushes on the insert, taking care of a proper positioning of the key.

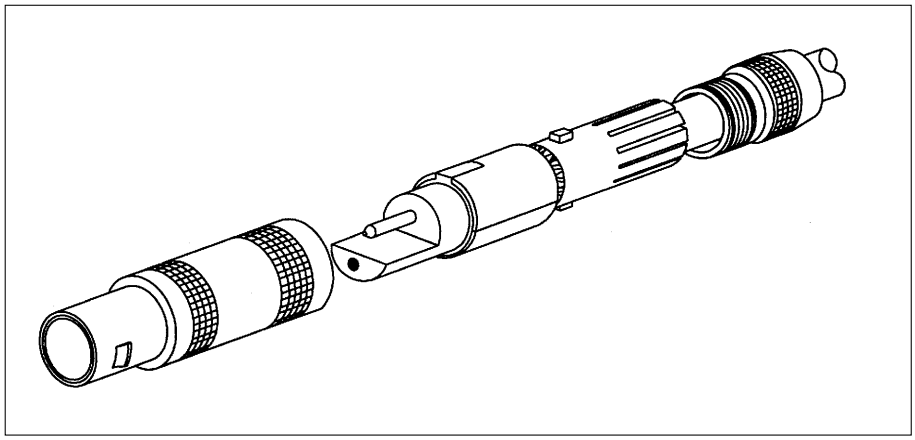

6 - Slide in the insert assembly into the plug (or the free receptacle) shell.

Note : the collet key may be properly set into shells key ways.

7 - Install the backnut and screw it.

Wiring and assembly instructions : COAXIAL PLUGS

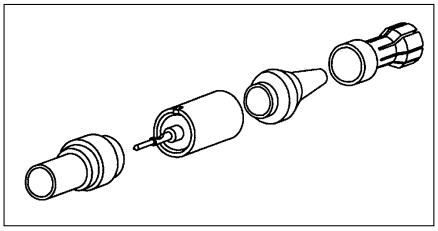

- **Cable stripping :** see page 27
- **Connector assembly**

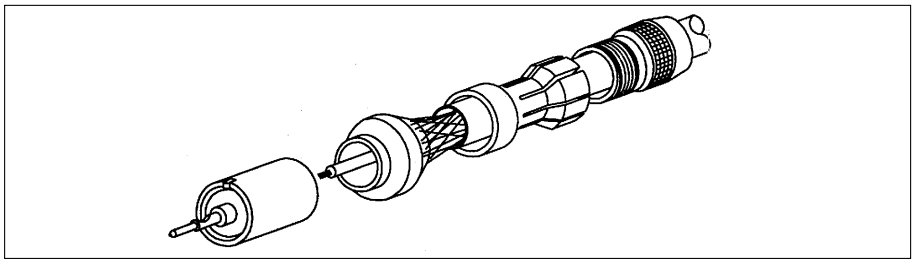

1 - Slide the backnut and the collet onto the cable.

2 - Position the intermediate cone in abutment on external sheath extremity

3 - Brush back the screen around the cone

4 - Pull back the collet onto the cone

5 - Position the rear insulator sub-assembly on the cone

Note :
- Take care to align cone key inside the sub-assembly rear key way.
- The stripped core end may be visible inside pin contact front window.

Remark : For size 00, no cone existing : sub-assembly directly onto collet.

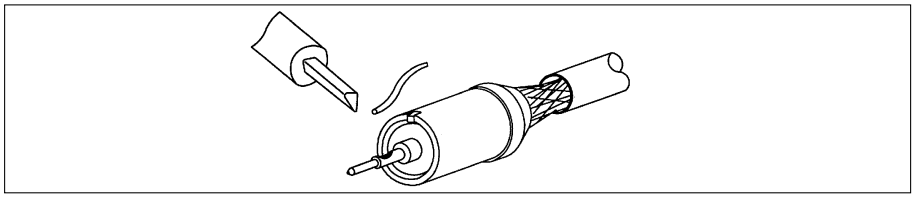

6 - Solder inner core thru the pin window

7 - Set in place the front insulator, taking care of the key/keyway positioning between the two half insert sub-assembly

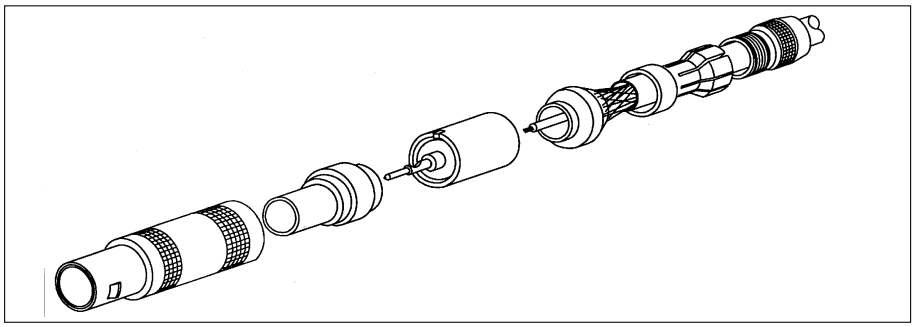

8 - Slide in the insert assembly into the plug (or free receptacle shells)

9 - Install the nut and screw it

Wiring and assembly instructions : SINGLE PIN PLUGS

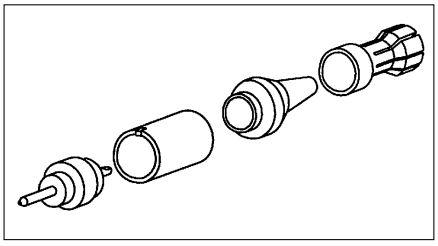

- **Cable stripping :** see page 27
- **Connector assembly**

Monolythic insert is directly soldered onto the inner core.

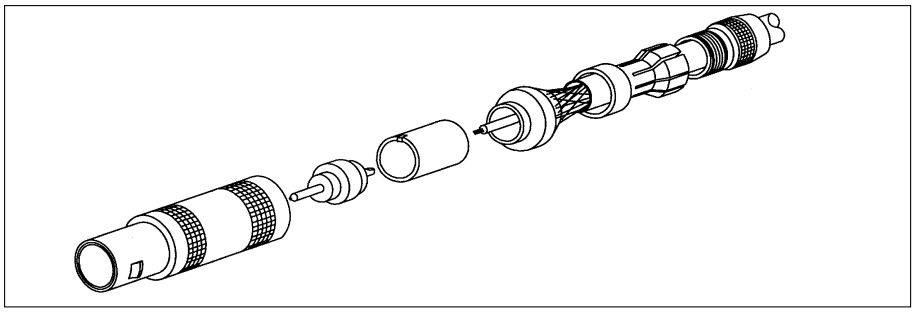

Wiring and assembly instructions : Crimp contact (NIM-CAMAC configuration)

• Wiring preparation

1 - Slide the protective boot and the crimping ferrule onto the cable

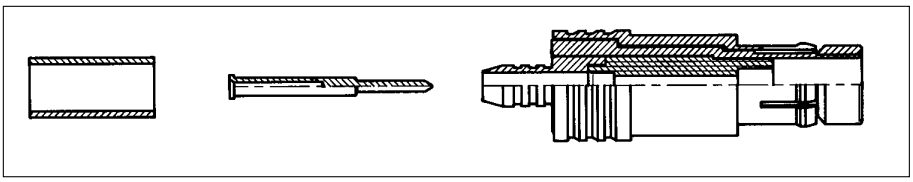

• Coaxial cable stripping

1 - Strip the coaxial cable according to the lengths given on the drawing

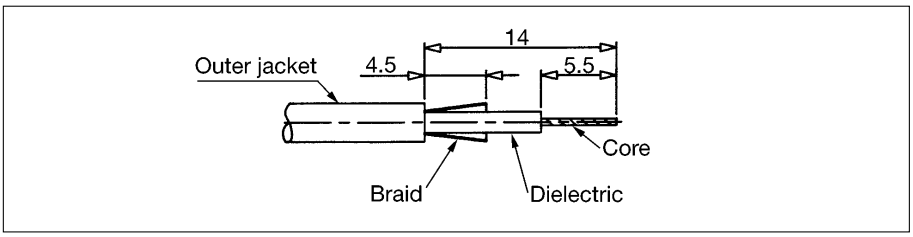

• Contact crimping

1 - Take the crimping tool P/N : JX2 W 1010 A9
2 - Crimp the contact

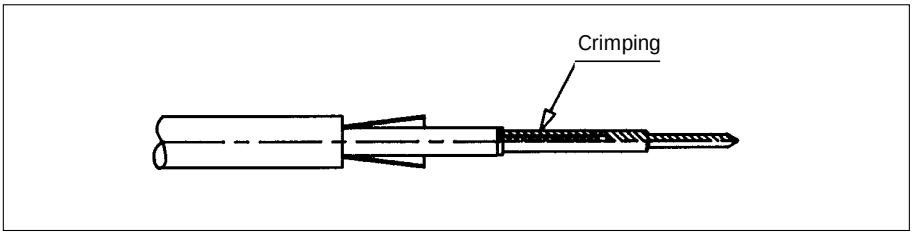

• Connector assembly

1 - Position the crimp contact then engage the insert cavity until it bottoms
2 - Fold the screen over the connector outlet
3 - Position the ferrule on the screen then crimp it

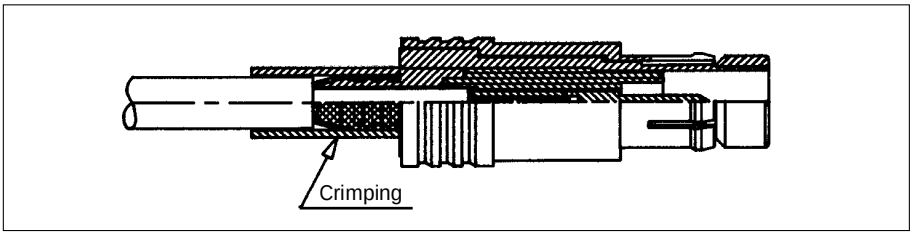

4 - Slide the protective boot and then position on the connector outershell

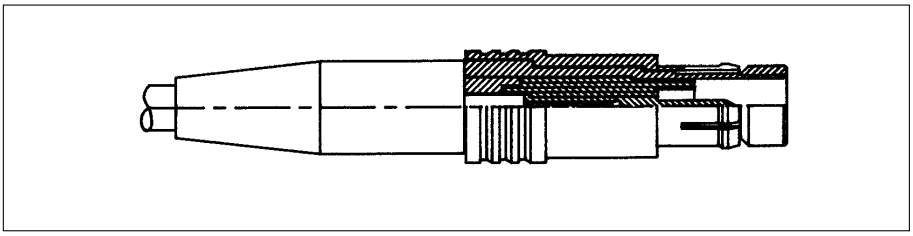

Key features

- Sealed IP 68 (mated connectors)
- Mechanically keyed : ensures correct polarization and alignment.
- Contact arrangements : from 2 to 10 contacts.
- Wire gauge range from 28 AWG to 14 AWG.
- High contact density in a small space.
- Contact termination in either crimp, solder or PCB contacts.

User advantages

Temporary immersion IP 68

6-collet cluster

Allows a wide range of cable diameter applications for a single connector. Reduces inventory variations.

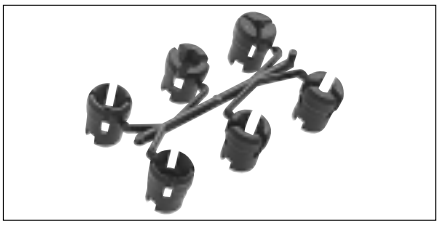

Removable contacts

Crimp versions allow easier wiring and maintenance.

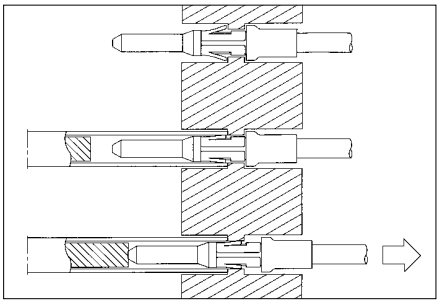

Part number system

Basic series		JKX	FD	1	G	05	M	C	S	D	S	M
Shell configuration	**FD - ER - EP - PC**											
Size	**0 - 1**											
Keying	**G**											
Contact layouts	**02 ---------- 10** (see page 33)											
Contact type	**M** : pin **F** : socket (in relation with keying)											
Contact termination	**C** : crimp ; **S** : solder ; **P*** : straight PCB tails ; **Q*** : 90° PCB tails ; **W** : 0.7 mm clipped solder											
Material & surface plating	**S** : Outer shell in brass alloy with glossy chrome over nickel **N** : Outer shell in brass alloy with black plating (consult us)											
	D : Obligatory suffix											
	S : Insulator in PPS **P** : Insulator in Peek (for Ø 0.5 mm contacts only) Obligatory suffix for layouts including contacts of Ø 0.5 mm											
Options	**M** : Connector with backnut for protective boot (protective boot to order separately page 34) **G** : Connector adapted to accomodate larger cables (Ø 4.5 to 6 in size 0 and Ø 6 to 8 in size 1) **R** : Red dot (possible for FD, PC, ER only)											

***** For receptacles with female contacts only.

Shell type

• Available JKX shells

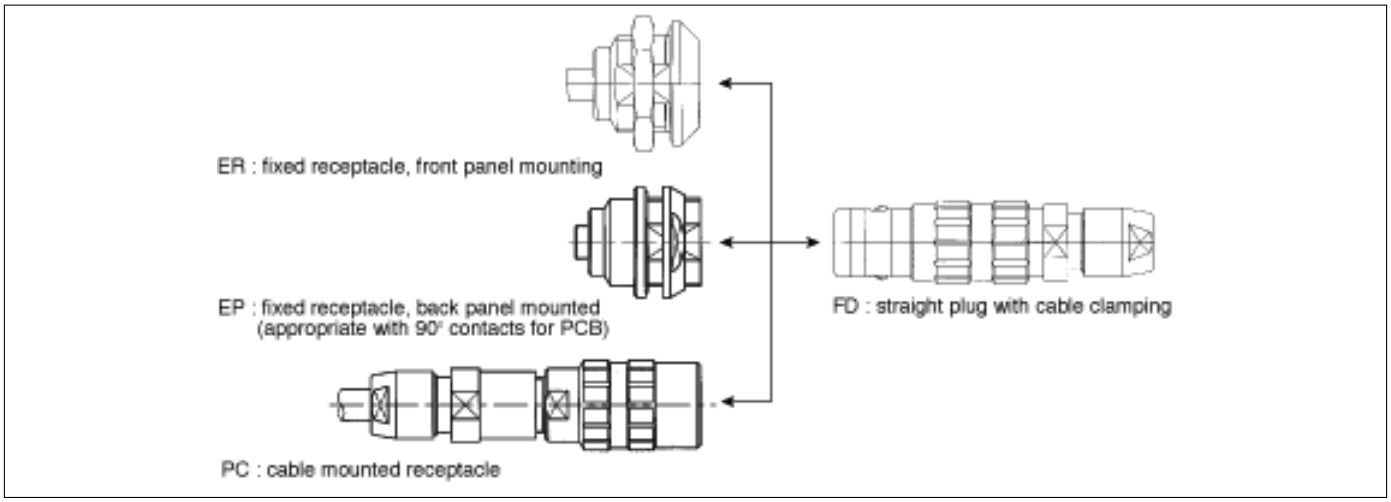

• Dimensions

ER : Fixed receptacle, front panel mounting

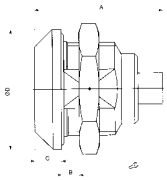

Size	A	B	C	Ø D
0	19.5	4.5	4	18
1	24.5	8.5	4.5	20

FD : Straight plug with cable clamping

Size	A	Ø B	Ø M
0	47	12	1.5 to 4.5
1	57	15	2 to 6

EP : Fixed receptacle, back panel mounting

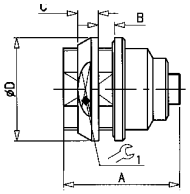

Size	A	B	C	Ø D
0	19.5	4.5	3.2	18
1	24.5	6	4	20

PC : Cable mounted receptacle

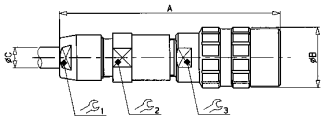

Size	A	Ø B	Ø C
0	–	–	–
1	60	16	2 to 6

• Option G : to accomodate bigger cables

Size	A	Ø B	Ø M
0	51	12	4.6 to 6
1	60	15	6 to 8

Keying

G keying is available in standard version (0° keying angle, plugs with pin contacts, receptacles with female contacts) for the 4 shell types. Reverse gender available in all layouts.

Shell size	Key	ER	EP	PC	FD
0	G	●	●	–	●
1	G	●	●	●	●

● Concerning the availability of other alternatives, please consult our commercial office.

Contacts

• Multi contacts inserts

Shell size	Male insulator viewed from wiring side	Contact layout	Available Contact types				Ø Contact	AWG		Max. current rating (A)	Testing voltage (Vrms)	Working voltage (Vdc / Vrms)
			S solder	C crimp	P* straight PCB tails	Q* 90° PCB tails		Solder wire Max.	Crimp wire Max.			
0		**02**	S	C	P	Q	0.9	24	20	10	1400	660/460
		03	S	C	P	Q	0.9	24	20	8	1300	600/420
		04	S	C	P	Q	0.7	26	22	7	1400	660/460
		05	S	C	P	Q	0.7	26	22	6.5	800	400/260
		06	S		P		0.5	28	-	2.5	680	320/220
		07	S		P		0.5	28	-	2.5	680	320/220
1		**02**	S	C	P		1.3	20	18	15	1600	760/530
		03	S	C	P	Q	1.3	20	18	12	1300	600/420
		04	S	C	P	Q	0.9	24	20	10	1900	900/630
		05	S	C	P	Q	0.9	24	20	9	1400	660/460
		06	S	C	P	Q	0.7	26	22	7	1400	660/460
		07	S	C	P	Q	0.7	26	22	7	1400	660/460
		08	S	C	P	Q	0.7	26	22	5	1200	600/420
		10	S		P		0.5	28	-	2.5	600	300/200

Inserts with fixed contacts (non removable contacts)

***** For receptacles with female contacts only

Options

• Protective boot

Protective boot can accept multiple cable diameters

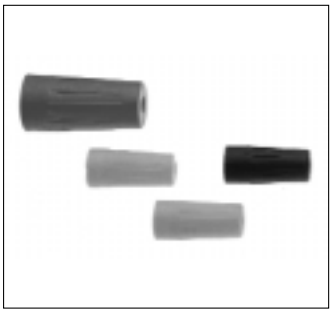

Part number	Shell size	Shell size Option G	Dimensions			
			Ø A	L	Ø Câble	
					min	Max.
JBX 0 MP*	0	-	2.2	20	1.5	5.5
JBX 1 MP*	1	0	2.6	25	2	7.5
JBX 2 MP*	-	1	4	30	3.5	9.7

*** Color code**

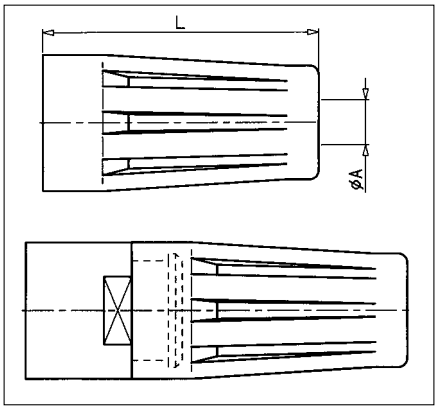

Color code	Colors
A	blue
B	white
G	grey
J	yellow
M	brown
N	black
R	red
V	green
O	orange

Material :

ELASTOLLAN (PUR)

Working temperature :

- 40°C ; + 80°C
- 40°F ; + 176°F

With each JKX connector, one protective boot can accept diverse cable diameters thus the end-user can manage various cable diameters without bothering with multiple part numbers.

• Caps : an efficient protection until 2 bars

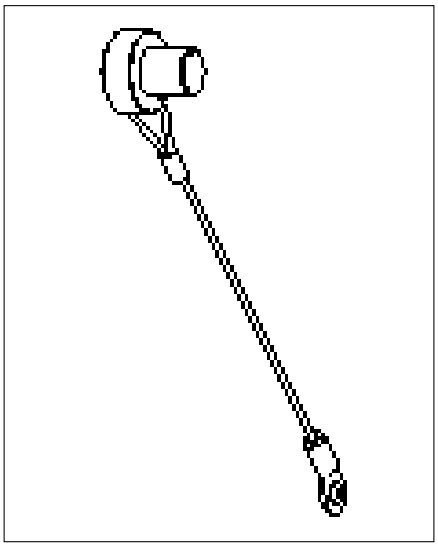

Part number	Ø
JKX BR0	15
JKX BR1	17

Technical characteristics

• Material and treatment

Component	Material	Standard		Surface treatment (µm)		
		ISO	ASTM	Cr	Ni	Au
Outer shell and collet nut	Brass	CuZn40Pb3	C38500/C360	0.1 - 0.6	5 - 8	-
Latching sleeve & metal collet	Brass	CuZn40Pb3	C38500/C360	-	5 - 8	-
Shielding ring	Brass	CuZn40Pb3	C38500/C360	-	3 - 7	-
Nut	Brass	CuZn40Pb3	C38500/C360		5 - 8	-
Tapered washer and half bushes	Brass	CuZn40Pb3	C38500/C360	-	5 - 8	-
Socket contact (1)	Copper-nickel	CuNi1Pb1P	CDA C 19150	-	3 - 5	0.5
Pin contact (1)	Brass	CuZn35Pb2	C35300/C360	-	3 - 5	0.5
Clip	Beryllium copper	CuBe1,9	C17200/C360	-	-	-

(1) Gold thickness as per MIL-G-45204C type 1, class 00.

Component	Material	Color	Temperature withstanding	
Insert	PPS + 40%GF or PEEK + 15%GF	black brown	- 65°C + 200°C - 50°C + 250°C	- 85°F + 392°F - 58°F + 482°F
Plastic collet	PA 6/6 + MoS2	black	- 55°C + 125°C	- 67°F + 257°F
Cable seal	Silicon rubber	red	- 50°C + 250°C	- 58°F + 482°F

• Mechanical and climatics

Characteristics	Values	Standard	Method
Endurance	> 1000 cycles (except for 0.7 mm crimp contacts for which endurance is limited to 500 cycles)	MIL-STD 1344A	2016.1
Shock	50 g, duration 6 ms ; contact Ø 0.7 mm and 0.9 mm 100 g, duration 6 ms ; contact Ø 1.3 mm - 1.6 mm and 2 mm	MIL-STD 1344A	2004.1
Vibrations	10 to 2000 Hz γ = 15 g, contact Ø 0.7 mm and 0.9 mm γ = 20 g, contact Ø 1.3 mm - 1.6 mm and 2 mm	MIL-STD 1344A	2005.1
Protection index	IP 68 (watertight - 48 hours under 1 m of water)	CEI 529	
Operating temperature	with plastic collets } - 55°C + 125°C - 67°F + 257°F	-	-
	with optional metal collets } - 55°C + 200°C - 67°F + 392°F	-	-

Wiring and assembly instructions

• Panel cutout

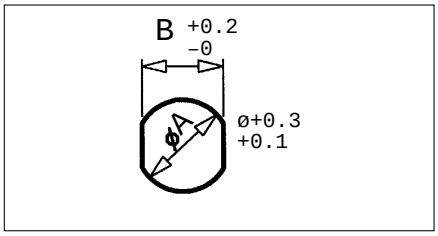

Size	0	1
Ø A	14.1	16.1
B	12.6	14.6

• Removable contacts

Crimp contacts

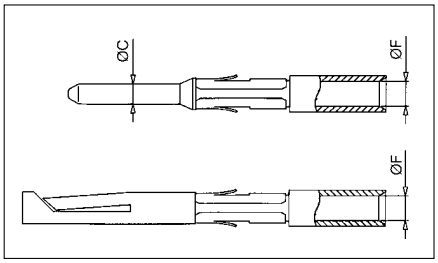

Contact		Usable cables			Max. current rating (A)	Contact resistance (mΩ)	Endurance (number of cycles)
Ø C	Ø F	Core section (mm2) min	Core section (mm2) Max.	AWG			
0.7	0.85	0.129	0.326	22 - 24 - 26	7	5	500 Max.
0.9	1.1	0.205	0.518	20 - 22 - 24	10	3.5	> 1000
1.3	1.4	0.326	0.823	18 - 20 - 22	15	3	> 1000

Solder contacts

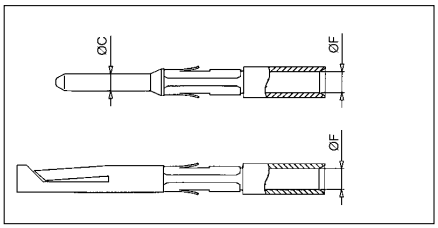

Contact		Usable cables			Max. current rating (A)	Contact resistance (mΩ)	Endurance (number of cycles)
Ø C	Ø F	Core section (mm2) min	Core section (mm2) Max.	AWG			
0.7	1.0	-	0.3	22	7	5	500 Max.
0.9	0.8	-	0.21	24	10	3.5	> 1000
1.3	1.1	-	0.60	20	15	3	> 1000

The conductor bucket on the solder contacts is designed with an angle to form a cup into which the solder can flow easily.

• Fixed contacts

Solder contacts

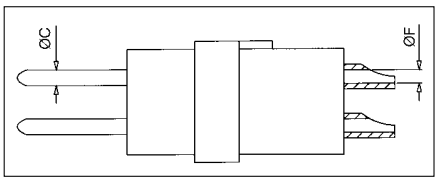

Contact		Shell size	Usable cables		Max. current rating (A)	Contact resistance (mΩ)	Endurance (number of cycles)
Ø C	Ø F		Core section (mm^2) Max.	AWG			
0.5	0.5	0 - 1	0.096	28	5	10	> 1000
0.7	0.63	0 - 1	0.15	26	7	5	> 1000

Contacts for PCB

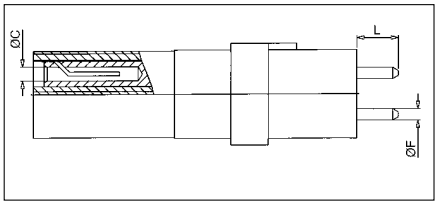

Contacts for PCB	Contact length dimensions “L”
PCB tail length size 0	dimension “L” 5.5 mm
0.7 mm female PCB tail length size 0	dimension “L” 3.5 mm
0.7 mm female PCB tail length size 1	dimension “L” 4.0 mm
0.9 mm female PCB tail length size 0	dimension “L” 3.5 mm
0.9 mm female PCB tail length size 1	dimension “L” 4.0 mm
1.3 mm female PCB tail length size 1	dimension “L” 4.0 mm, dimension “F” 0.7 mm

Wiring and assembly instructions

• Cable stripping for connectors with crimp contacts

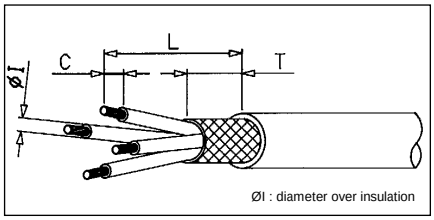

Shell size	Ø Contacts	Ø I	Stripping for FD / PC		
			L	C	T
0	0.7	≤ 1.35	15	4	7
		> 1.35		5.5	
	0.9	≤ 1.6	15	4	7
		> 1.6		5.5	
1	0.7	≤ 1.35	17	4	8
		> 1.35		5.5	
	0.9	≤ 1.6	17	4	8
		> 1.6		5.5	
	1.3	≤ 2.1	17	4	8
		> 2.1		5.5	

• Cable stripping for connectors with solder contacts

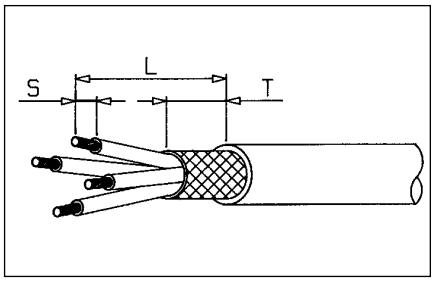

Shell size	Ø Contacts	Stripping for FD / PC		
		L	S	T
0	0.5	11	2	7
	0.7	12	3	7
	0.9	12	3	7
1	0.5	13	2	8
	0.7	14	3	8
	0.9	14	3	8
	1.3	14	3.5	8

• Watertightness design (mated connectors)

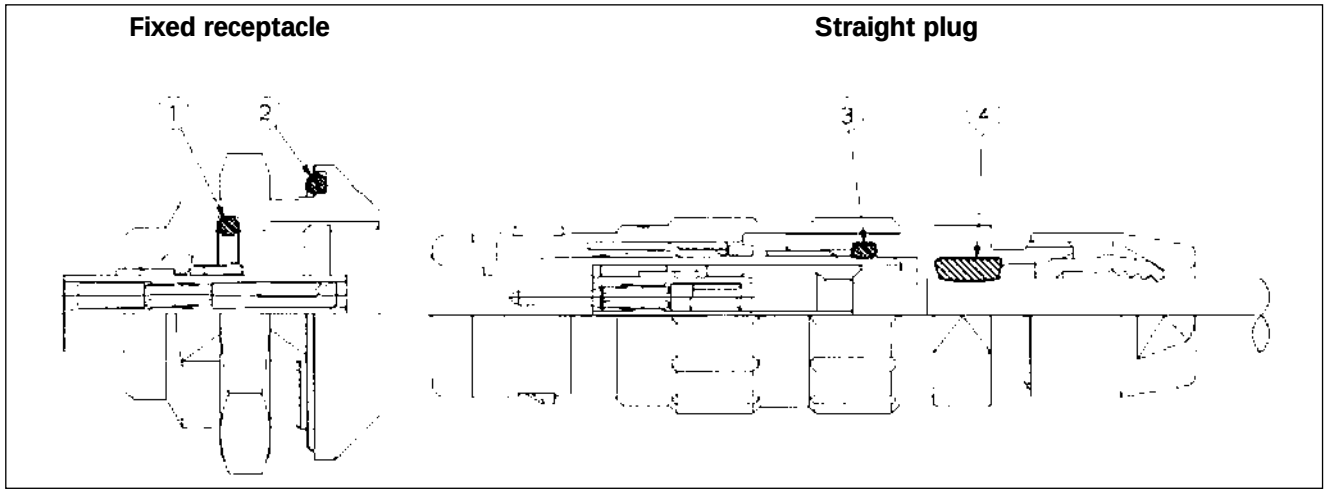

① **:** O'ring for sealing between receptacle and plug shell

② **:** O'ring for sealing between receptacle and panel

③ **:** O'ring for sealing between plug body and backshell

④ **:** seals to accomodate variety of cable diameters

Wiring and assembly instructions : STRAIGHT PLUG

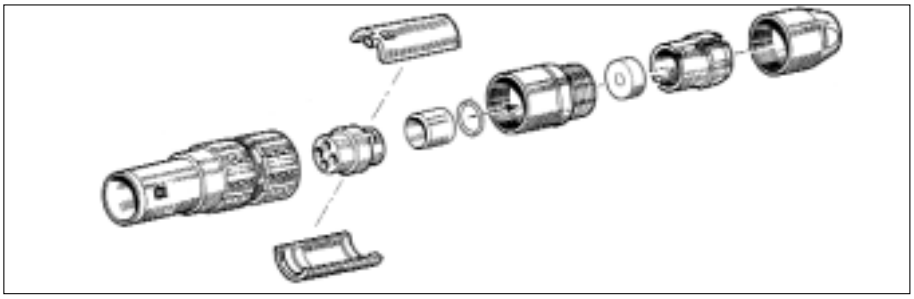

• Cable stripping : see page 37

• Connector preparation

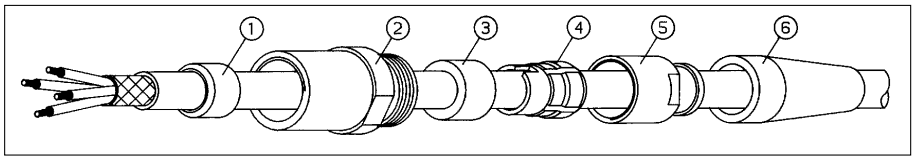

1 - Select the proper collet ④ and the cable seal ③ (see page 39).

2 - Slide protective boot ⑥, the backnut ⑤, the collet ④, the cable seal ③, the outershell ② and the taper seat ① onto the cable. Strip end of cable (see pg. 16)

• Contacts wiring : crimp contacts

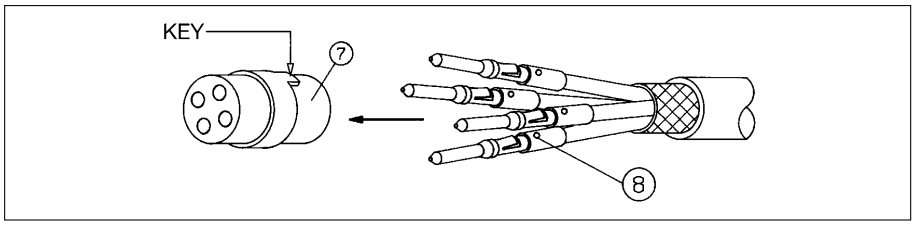

1 - Select the proper crimping tool (see page 48)

2 - Adjust the crimping tool based on the wire size "AWG". (See wire size and crimp tool settings on the back of this locator.)

3 - Crimp the contacts ④ then insert the contact into the insulator until the clip is fully seated and cannot be removed.

• Contacts wiring : solder contacts

Fixed solder contacts 0.5 mm and 0.7 mm	Removable solder contacts from 0.9 mm to 1.3 mm
1 - Insert wire into solder cup and solder	1 - Insert wire into solder cup and solder 2 - Insert the contact into the insulator until the clip is fully seated and cannot be removed.

• Connector assembly

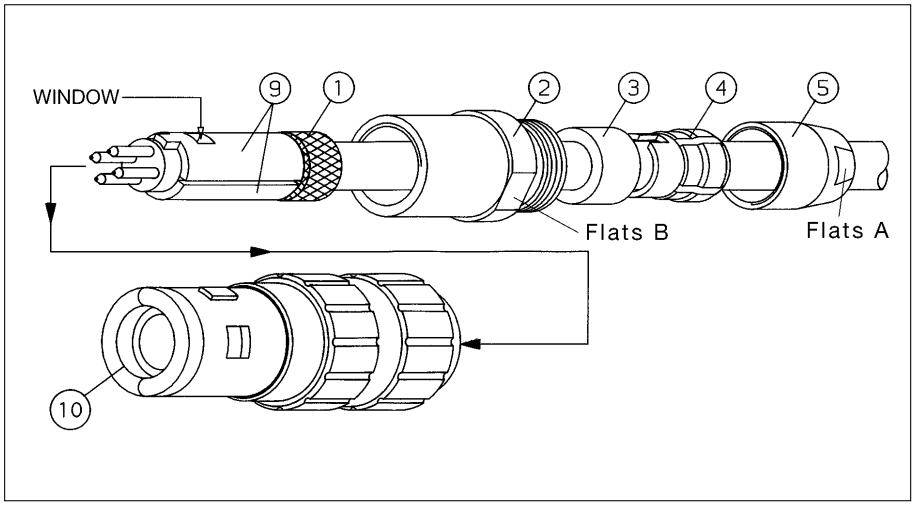

1 - In case of shielded cable, comb out the shield and fold back over the tapper seat ①.

2 - Position 2 half bushes ⑨, making sure that the insert key appears through the windows of one bush.

3 - Position the taper seat ① on the half bushes ⑨.

4 - Position all the sub-assembly in connector housing ⑩, making sure to keep the sub-assembly well aligned.

5 - Screw the outershell ② following the torque values on page 39. Install the cable seal ③ and the collet ④ into the outershell ② then screw the backnut ⑤ till bottoming. Use 2 wrenches well positionned on the flats A and B. Place a wrench to grip flats B, use the other wrench to tighten the backnut at the flats A following the torque values on page 39.

6 - Install the protective boot ⑥ if applicable.

Wiring and assembly instructions

• Collets selection according to cable diameters

3 or 5 collets per shell size allow a wide range of cable diameters for a single connector. Cable out diameters are for information only, since values will change with each cable construction.

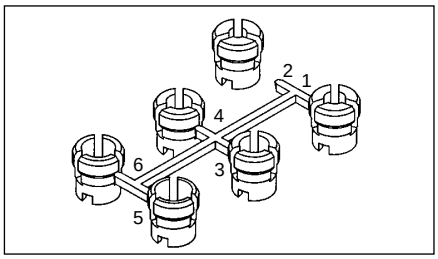

Collet number	Cable diameter			
	Shell size 0	Size 0, option G	Shell size 1	Size 1, option G
1	**1.5** - 2.5	-	**2** - 2.5	-
2	2.6 - 3.5	-	2.6 - 3.5	-
3	3.6 - **4.5**	-	3.6 - 4.5	**6.1** - 6.7
4	-	**4.6** - 5.5	4.6 - 5.5	6.8 - 7.7
5	-	5.6 - **6**	5.6 - **6**	7.8 - **8**

Collet number 4 in shell size 0 and collet number 6 in shell size 1 are not used.

• Cable seal selections according to cable size

Discreet application based on cable diameter

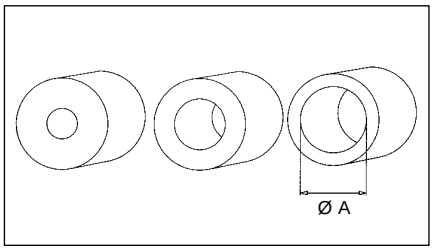

Cable gland Ø A	Cable diameter			
	Shell size 0	Size 0, option G	Shell size 1	Size 1, option G
2	1.5 - 2.9			
3.5	3 - 4.5			
2.5			2 - 3.4	-
4		4.6 - 4.9	3.5 - 4.9	-
5.5		5 - 6	5 - 6	6.1 - 6.4
7				6.5 - 8

• Shielding

Tested according to MIL-STD 1344 A, method 3007

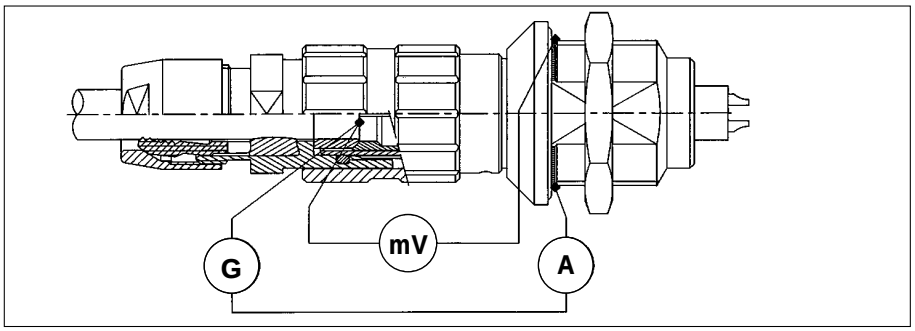

Shell size	Electrical continuity (mΩ)
0	4
1	3

• Coupling torques

Advised torque* in Nm				
Size mm	0	0 (option G)	1	1 (option G)
	1.6	/	1.8	/
1	1.5	2	2	2.5
2	0.8	0.8	1	1

Torque values are the maximum allowable for each connector size. Torque values will vary due to the type and size of the cable used

*Apply thread lock to back nut prior to assembly.

Tool dimensions

Tools (jaw dimensions)	14 x 1		16 x 1	
Size	0	0 (option G)	1	1 (option G)
	17		19	
1	8	10		13
2	10	11	12	14

Tool numbers can be found on page 32

JBX Series
sealed version size 2

Key features

- Sealed IP 67 (mated connectors)(FE, EC, SE, & PC)
- Watertight receptacles IP68 (HC & HH)
- Mechanically keyed : ensure correct polarisation and alignment.
- Contact arrangements : from 2 to 19 contacts.
- Wire gauge range from 26 AWG to 12 AWG.
- High contact density in a small space.
- Contact termination in either crimp, solder or PCB contacts.

User advantages

Wet environment IP67

6-collet cluster

Allows a wide range of cable diameter applications for a single connector. Reduces inventory variations.

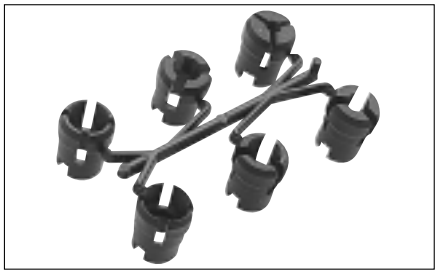

Removable contacts (EC, FE, SE & PE)

Crimp versions allow easier wiring and maintenance.

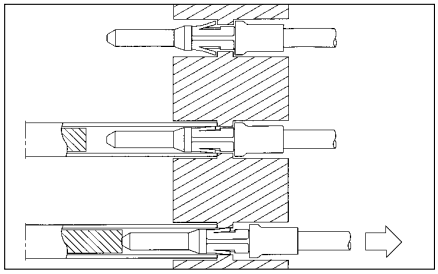

Part number system

Basic series		JBX	FE	2	G	12	M	C	S	D	S	R
Shell type	**FE-HH-HC-EC-PE-SE**											
Shell size	**2**											
Keying	**G**											
Contact layouts	**02 ---------- 19**											
Contact type	**M** : pin **F** : socket (in relation with keying)											
Contact termination	**C** : crimp ; **S** : solder ; **P*** : straight PCB tails ; **Q*** : 90° PCB tails											
Material & surface plating	**S** : Outer shell in brass alloy with chrome over nickel **N** : Outer shell in brass alloy with black plating (consult us)											
	D : Obligatory suffix											
	S : Obligatory suffix											
Option	**R** : FE, PE, HH, & HC N/A for EC & SE											

***** For receptacles with female contacts only.

Shell type

• Available sealed JBX, Size 2

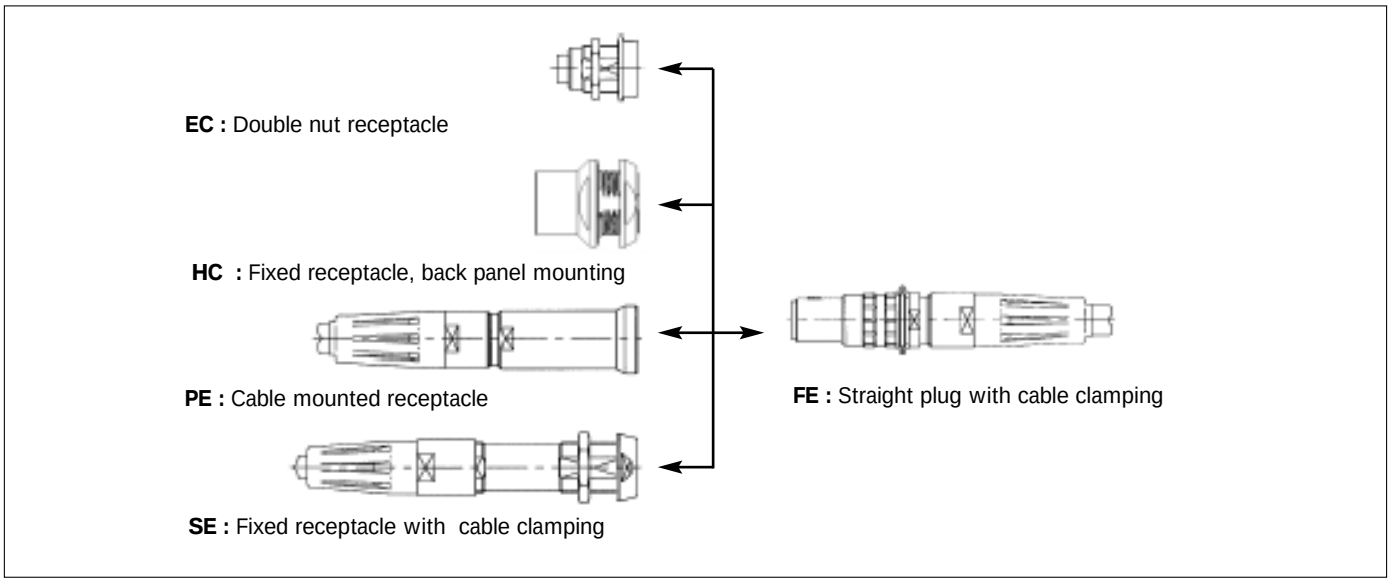

• Dimensions

FE : Straight plug supplied with protective boot, sealed mated IP67.

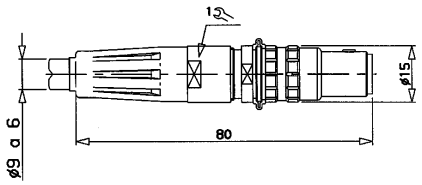

EC : Double nut receptacle. Sealed mated IP67 not sealed unmated.

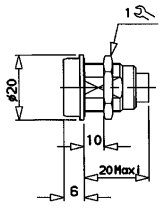

HC : Fixed receptacle, back panel mount. Sealed unmated IP68, not available in crimp, 4-position minimum.

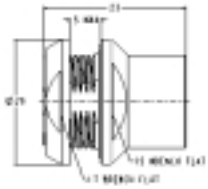

SE : Cable clamp receptacle, sealed mated IP67, supplied with protective boot.

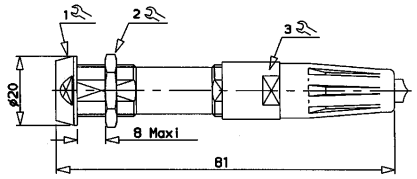

PE : Cable mounted supplied with protective boot sealed mated IP67.

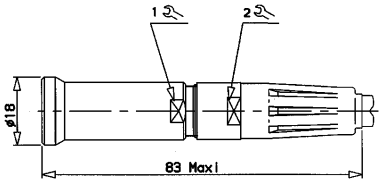

Keying

Only G keying is available in standard version (0° keying angle, plugs with pin contacts, receptacles with female contacts) for the different types of shells.

Contact layouts

• Multi contact inserts

Shell size	Male insulator viewed from wiring side	Contact layout	Available Contact types				Ø Contact	AWG		Max. current rating (A)*	Testing voltage (Vrms)*	Working voltage (Vdc / Vrms)*
			S solder	C crimp	P* straight PCB tails	Q* 90° PCB tails		Solder wire Max.	Crimp wire Max.			
2		**02**	S	C			2	16	12	30	2100	1000/700
		03	S	C			1.6	18	14	17	1700	830/560
		04	S	C	P	Q	1.3	20	18	15	2400	1000/800
		05	S	C	P	Q	1.3	20	18	14	1900	900/630
		06	S	C	P	Q	1.3	20	18	12	1900	900/630
		07	S	C	P	Q	1.3	20	18	11	1500	730/500
		08	S	C	P	Q	0.9	24	20	10	1700	830/560
		10	S	C	P	Q	0.9	24	20	8	1700	830/560
		12	S	C	P	Q	0.7	26	22	7	1700	830/560
		16	S	C	P	Q	0.7	26	22	6	1500	730/500
		18	S	C	P		0.7	26	22	5.5	1400	660/460
		19	S	C	P		0.7	26	22	5	1400	660/460

Inserts with fixed contacts (non removable contacts).

***** For EC and HC receptacles with female contacts only.
HH & HC fixed contacts only.

Technical characteristics

The technical characteristics are the same as for the standard JBX series except the following ones:

• Material - Specific additionnal elements

Component	Material	Color	Working temperature	
Seals	Nitrile	O'ring seal = black	- 30°C ; + 250°C	- 58°F ; + 482°F
Protective boot	Elastollan (PUR)	Black	- 40°C ; + 80°C	- 40°F ; + 176°F

• Mechanical and climatics - Specific additional elements

Characteristics	Values	
Protection index	IP 67 (Splashproof - 1/2 hour under 1 m of water)	
Operating temperature	- 40°C ; + 80°C	- 40°F ; + 176°F

Options

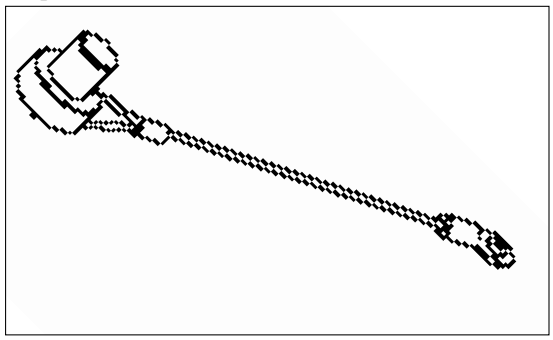

• **Cap: Part-number = JBX BR2 022 :** an efficient protection against water

Wiring and assembly instructions

• Panel cutout

The panel cutout is the same as for the JBX size 2 shells except for the HC.

• Operation to add during the plug assembly:

Deposit of watertight thread glue between the backnut (② on the drawing p17) and the connection shell (⑦ on the drawing p17).
Advised glue = Loctite 542.

• Sealed Panel cutout

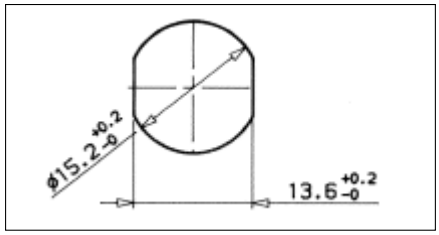

Accessories JAX - JBX

• Insulating washer

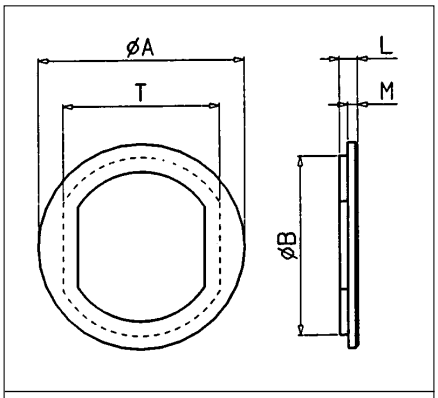

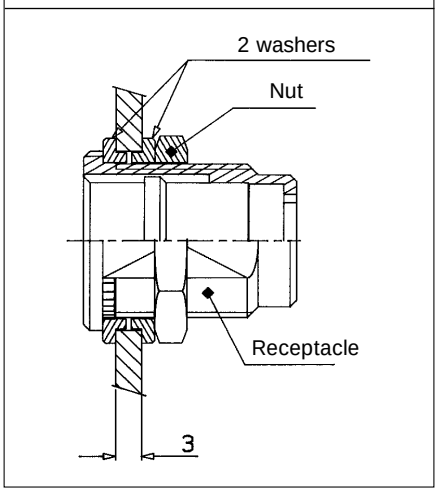

Part number	Shell size	Ø A	B	L	M	N	T	E
JBX 00 RIN	**00**	10	8.8	1.8	1	0.8	8	4.4
JBX 0 RI*	**0**	12	10.8	1.8	1	0.8	9.9	6.4
JBX 1 RI*	**1**	16	13.8	1.8	1	0.8	12.2	8.4
JBX 2 RI*	**2**	21	17.8	2.2	1.2	0.8	16.2	8.2
JBX 3 RI*	**3**	25	21.8	2.2	1.2	0.8	20.2	10.1

* Washer colors as protective boots.
In size 00, available only in black.

Material : PA 6/6

Working temperature : - 40°C ; + 125°C
- 40°F ; + 257°F

Using 2 washers for receptacle / panel insulating

Be careful : usable for the JAX and JBX series but not for sealed connectors (JKX and sealed JBX size 2).

• Grounding washer

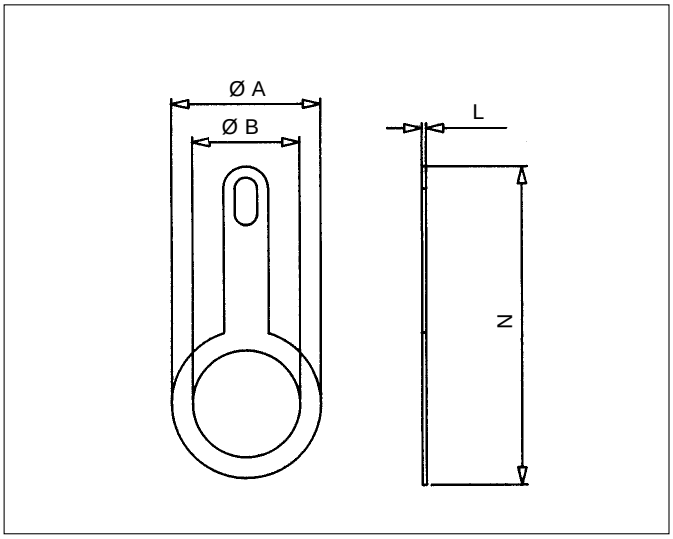

Part number	Shell size	Dimensions			
		Ø A	Ø B	L	N
JAX RA 00 251	**00**	**10**	**7.2**	**0.3**	**21.5**
JAX RA 0 251	**0**	13	9.1	0.3	24
JAX RA 1 251	**1**	16	12.2	0.3	24
JAX RA 2 251	**2**	21	15.1	0.8	35
JAX RA 3 251	**3**	25	18.1	0.8	37

Material : - Brass
- Nickel plated (3 µm)

Be careful : usable for the JAX and JBX series but not for sealed connectors (JKX and sealed JBX size 2).

Accessories JAX-JBX

• Locking washer

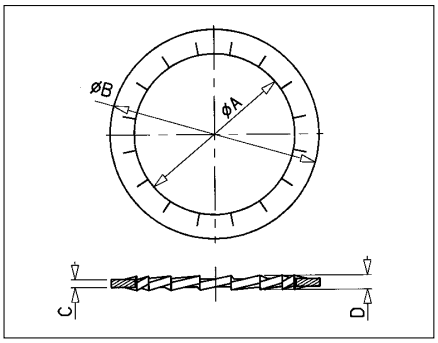

Part number	Shell size	Dimensions			
		Ø A	Ø B	C	D
JAX RE 0	**0**	9.2	12.5	0.6	1
JAX RE 1	**1**	12.2	16	0.6	1
JBX RE 2	**2**	16	19.8	0.6	1

Piece parts JBX-JKX

• Crimp contacts (if ordered separately)

Shell size	Ø contact	Part Number	
		Crimp pin	Crimp socket
0	0.9	JBX 0 CT MC 09	JBX 0 CT FC 09
	0.7	JBX 0 CT MC 07	JBX 0 CT FC 07
1	1.3	JBX 1 CT MC 13	JBX 1 CT FC 13
	0.9	JBX 1 CT MC 09	JBX 1 CT FC 09
	0.7	JBX 1 CT MC 07	JBX 1 CT FC 07
2	2	JBX 2 CT MC 20	JBX 2 CT FC 20
	1.6	JBX 2 CT MC 16	JBX 2 CT FC 16
	1.3	JBX 2 CT MC 13	JBX 2 CT FC 13
	0.9	JBX 2 CT MC 09	JBX 2 CT FC 09
	0.7	JBX 2 CT MC 07	JBX 2 CT FC 07
3	2	JBX 3 CT MC 20	JBX 3 CT FC 20
	1.6	JBX 3 CT MC 16	JBX 3 CT FC 16
	1.3	JBX 3 CT MC 13	JBX 3 CT FC 13
	0.9	JBX 3 CT MC 09	JBX 3 CT FC 09
	0.7	JBX 3 CT MC 07	JBX 3 CT FC 07

• Solder contacts (if ordered separately)

Shell size	Ø contact	Part Number	
		Solder pin	Solder socket
0	0.9	JBX 0 CT MS 09	JBX 0 CT FS 09
1	1.3	JBX 1 CT MS 13	JBX 1 CT FS 13
	0.9	JBX 1 CT MS 09	JBX 1 CT FS 09
2	2	JBX 2 CT MS 20	JBX 2 CT FS 20
	1.6	JBX 2 CT MS 16	JBX 2 CT FS 16
	1.3	JBX 2 CT MS 13	JBX 2 CT FS 13
	0.9	JBX 2 CT MS 09	JBX 2 CT FS 09
3	2	JBX 3 CT MS 20	JBX 3 CT FS 20
	1.6	JBX 3 CT MS 16	JBX 3 CT FS 16
	1.3	JBX 3 CT MS 13	JBX 3 CT FS 13
	0.9	JBX 3 CT MS 09	JBX 3 CT FS 09

Solder contacts of 0.5 mm and 0.7 mm diameter not available separately (always fixed into the insulator).

Piece parts JBX-JKX

• Inserts for removable solder and crimp contacts (if ordered separately)

Shell size	Insert	Insert Part Number	
		Pin contacts	Socket contacts
0	02	JBX 0 BI 02 MS	JBX 0 BI 02 FS
	03	JBX 0 BI 03 MS	JBX 0 BI 03 FS
	04	JBX 0 BI 04 MS	JBX 0 BI 04 FS
	05	JBX 0 BI 05 MS	JBX 0 BI 05 FS
1	02	JBX 1 BI 02 MS	JBX 1 BI 02 FS
	03	JBX 1 BI 03 MS	JBX 1 BI 03 FS
	04	JBX 1 BI 04 MS	JBX 1 BI 04 FS
	05	JBX 1 BI 05 MS	JBX 1 BI 05 FS
	06	JBX 1 BI 06 MS	JBX 1 BI 06 FS
	07	JBX 1 BI 07 MS	JBX 1 BI 07 FS
	08	JBX 1 BI 08 MS	JBX 1 BI 08 FS
2	02	JBX 2 BI 02 MS	JBX 2 BI 02 FS
	03	JBX 2 BI 03 MS	JBX 2 BI 03 FS
	04	JBX 2 BI 04 MS	JBX 2 BI 04 FS
	05	JBX 2 BI 05 MS	JBX 2 BI 05 FS
	06	JBX 2 BI 06 MS	JBX 2 BI 06 FS
	07	JBX 2 BI 07 MS	JBX 2 BI 07 FS
	08	JBX 2 BI 08 MS	JBX 2 BI 08 FS
	10	JBX 2 BI 10 MS	JBX 2 BI 10 FS
	12	JBX 2 BI 12 MS	JBX 2 BI 12 FS
	16	JBX 2 BI 16 MS	JBX 2 BI 16 FS
	18	JBX 2 BI 18 MS	JBX 2 BI 18 FS
	19	JBX 2 BI 19 MS	JBX 2 BI 19 FS
3	03	JBX 3 BI 03 MS	JBX 3 BI 03 FS
	04	JBX 3 BI 04 MS	JBX 3 BI 04 FS
	07	JBX 3 BI 07 MS	JBX 3 BI 07 FS
	10	JBX 3 BI 10 MS	JBX 3 BI 10 FS
	14	JBX 3 BI 14 MS	JBX 3 BI 14 FS
	18	JBX 3 BI 18 MS	JBX 3 BI 18 FS
	22	JBX 3 BI 22 MS	JBX 3 BI 22 FS
	30	JBX 3 BI 30 MS	JBX 3 BI 30 FS

Insert for pin contacts

Insert for socket contacts

• Inserts with fixed solder contacts (if ordered separately)

Shell size	Insert	Insert Part Number	
		Pin contacts	Socket contacts
00	04	JBX 00 BI 04 MPS	JBX 00 BI 04 FPS
0	04	JBX 0 BI 04 MSS	JBX 0 BI 04 FSS
	05	JBX 0 BI 05 MSS	JBX 0 BI 05 FSS
	06	JBX 0 BI 06 MPS	JBX 0 BI 06 FPS
	07	JBX 0 BI 07 MPS	JBX 0 BI 07 FPS
1	07	JBX 1 BI 07 MSS	JBX 1 BI 07 FSS
	08	JBX 1 BI 08 MSS	JBX 1 BI 08 FSS
	10	JBX 1 BI 10 MPS	JBX 1 BI 10 FPS
2	12	JBX 2 BI 12 MSS	JBX 2 BI 12 FSS
	16	JBX 2 BI 16 MSS	JBX 2 BI 16 FSS
	18	JBX 2 BI 18 MSS	JBX 2 BI 18 FSS
	19	JBX 2 BI 19 MSS	JBX 2 BI 19 FSS
3	22	JBX 3 BI 22 MSS	JBX 3 BI 22 FSS
	30	JBX 3 BI 30 MSS	JBX 3 BI 30 FSS

Insert for pin contacts

Insert for socket contacts

Toolings JBX - JKX

• Manual extraction tools

Contacts automatically extracted

The extraction tool is similar for both male and female contacts.

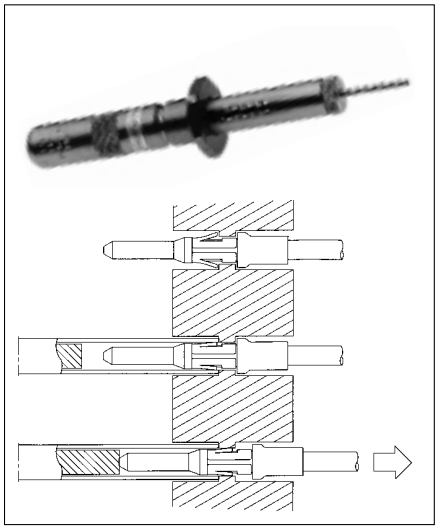

Shell size	Ø Contacts	SOURIAU Part number	ASTRO Part number
0	0.7	JBX OUT DC 07	ATJP 2045
	0.9	JBX OUT DC 09	ATJP 2057
1	0.7	JBX OUT DC 07	ATJP2045
	0.9	JBX OUT DC 09	ATJP 2057
	1.3	JBX OUT DC 13	ATJP 2077
2	0.7	JBX OUT DC 07	ATJP 2045
	0.9	JBX OUT DC 09	ATJP 2057
	1.3	JBX OUT DC 13	ATJP 2077
	1.6	JBX OUT DC 16	ATJP 2095
	2.0	JBX OUT DC 20	ATJP 2115
3	0.7	JBX OUT DC 07	ATJP 2045
	0.9	JBX OUT DC 09	ATJP 2057
	1.3	JBX OUT DC 13	ATJP 2077
	1.6	JBX OUT DC 16	ATJP 2095
	2.0	JBX OUT DC 20	ATJP 2115

The contact is automatically extracted without the need of pulling onto the cable.

Toolings JBX - JKX

• Crimping tool

Specifications MIL-C-22520 / 7.01

	MIL P/N - SOURIAU P/N	Supplier P/N
Contacts 0.7 mm - 0.9 mm and 1.3 mm	MIL-22520/7-01	Daniels : MH860 Buchanan : 616 336

Specifications MIL-C-22520 / 1.01

	MIL P/N - SOURIAU P/N	Supplier P/N
Contacts 1.6 mm and 2 mm	MIL-22520/1-01	Daniels : AF8 Buchanan : 615 708

• Locator for pin and socket 0.7 - 0.9 mm and 1.3 mm contacts

Shell size	Ø contacts	AWG	Male contact			Female contact		
			SOURIAU P/N	DANIELS P/N	ASTRO P/N	SOURIAU P/N	DANIELS P/N	ASTRO P/N
0	0.7	22 - 24 - 26	JBX 0 OUT LP07	86 - 223	/	JBX 0 OUT LS07	86 - 224	/
	0.9	20 - 22 - 24	JBX 0 OUT LP09	86 - 225	/	JBX 0 OUT LS09	86 - 226	/
1	0.7	22 - 24 - 26	JBX 1 OUT LP07	86 - 196	642 - 001	JBX 1 OUT LS07	86 - 197	642 - 004
	0.9	20 - 22 - 24	JBX 1 OUT LP09	86 - 198	642 - 002	JBX 1 OUT LS09	86 - 199	642 - 005
	1.3	18 - 20 - 22	JBX 1 OUT LP13	86 - 200	642 - 003	JBX 1 OUT LS13	86 - 201	642 - 006
2	0.7	22 - 24 - 26	JBX 2 OUT LP07	86 - 202	642 - 007	JBX 2 OUT LS07	86 - 203	642 - 010
	0.9	20 - 22 - 24	JBX 2 OUT LP09	86 - 204	642 - 008	JBX 2 OUT LS09	86 - 205	642 - 011
	1.3	18 - 20 - 22	JBX 2 OUT LP13	86 - 206	642 - 009	JBX 2 OUT LS13	86 - 207	642 - 012
3	0.7	22 - 24 - 26	JBX 3 OUT LP07	86 - 217	642 - 014	JBX 3 OUT LS07	86 - 214	642 - 017
	0.9	20 - 22 - 24	JBX 3 OUT LP09	86 - 218	642 - 015	JBX 3 OUT LS09	86 - 215	642 - 018
	1.3	18 - 20 - 22	JBX 3 OUT LP13	86 - 219	642 - 016	JBX 3 OUT LS13	86 - 216	642 - 019

• Turret with locator for pin and socket 1.6 mm and 2 mm contacts

Shell size	Ø contacts	AWG	Male and female contacts		
			SOURIAU P/N	DANIELS P/N	ASTRO P/N
2	1.6	14 - 16 - 18	JBX 2 OUT LT16	TH 564	650 - 030
	2	12 - 14 - 16	JBX 2 OUT LT20	TH 565	650 - 031
3	1.6	14 - 16 - 18	JBX 3 OUT LT16	TH 566	650 - 038
	2	12 - 14 - 16	JBX 3 OUT LT20	TH 567	650 - 035

Examples of custom designs derivated from standard connectors lines

• Watertight receptacles

• **JBX series:**

Custom watertight receptacles designed to customer requirements

• Black finish plating

• **JBX and JKX series,** black chrome plating

Applications: Military radiocommunication

Push-Pull connectors

Request form please fill in and fax to SOURIAU - Customer service
(see the address page for your local contact)

Name : . . . . . Tel number : . . . . . Fax number : . . . . . .

Title : . . . . . E-mail : . . . . . .

Company : . . . . . .

Address : . . . . . .

Applications :

❏ Medical ❏ Audio ❏ Video ❏ Instrumentation ❏ Nuclear physics

❏ GPS ❏ Transportation ❏ Metrology ❏ Other .....

Detailed description of end product, unit or application .....

Connector description :

❏ Series : . . . . . ❏ Shell configuration : . . . . . .

❏ Shell size : . . . . . ❏ Protective boot : . . . . . ❏ Color : . . . . . .

❏ Number of contacts : . . . . . .

❏ Type of contacts : ❏ Solder ❏ Crimp ❏ Printed circuit ❏ 90° printed circuit

❏ Conductor AWG : . . . . . ❏ Coax type : . . . . . ❏ Other : . . . . . .

Electrical :

❏ Working voltage (AC/DC) :. . . . . ❏ Current rating : . . . . . .

❏ Impedance (Ohms) : . . . . . ❏ SWR : . . . . . .❏ Frequency . . . . . .

❏ Contact resistance : . . . . . ❏ Shielding : . . . . . .

❏ Fibre optics : ❏ Multimode . . . . . ❏ Monomode . . . . . .

Environment :

❏ Temperature : . . . . . ❏ Protection index (IP --) : . . . . . .

❏ Outside environment :

❏ Clear . . . . . ❏ Splash proof . . . . . .❏ Sterilization . . . . . .

❏ Dirt . . . . . ❏ Fluids . . . . . .❏ Radiation . . . . . .

❏ Chemicals . . . . . ❏ Waterproof . . . . . .❏ Gases . . . . . .

❏ Salt waterspray . . . . . .

Projections :

❏ Prototype quantity : . . . . . ❏ Delivery date : . . . . . .

❏ Preseries quantity : . . . . . ❏ Delivery date : . . . . . .

❏ Production quantity : . . . . . ❏ Delivery date : . . . . . .

❏ Production per year : . . . . . ❏ Number of years : . . . . . .

❏ Target pricing per connector : . . . . . .

Conversion Table

• Millimeters / Inches

(mm)	(inches)	(mm)	(inches)	(mm)	(inches)
0.1	0.00394	8.2	0.32308	38.0	1.49720
0.2	0.00788	8.4	0.33096	38.5	1.51690
0.3	0.01182	8.6	0.33884	39.0	1.53660
0.4	0.01576	8.8	0.34672	39.5	1.55630
0.5	0.01970	9.0	0.35460	40.0	1.57600
0.6	0.02364	9.2	0.36248	40.5	1.59570
0.7	0.02758	9.4	0.37036	41.0	1.61540
0.8	0.03152	9.6	0.37824	41.5	1.63510
0.9	0.03546	9.8	0.38612	42.0	1.65480
1.0	0.03940	10.0	0.39400	42.5	1.67450
1.1	0.04334	10.5	0.41370	43.0	1.69420
1.2	0.04728	11.0	0.43340	43.5	1.71390
1.3	0.05122	11.5	0.45310	44.0	1.73360
1.4	0.05516	12.0	0.47280	44.5	1.75330
1.5	0.05910	12.5	0.49250	45.0	1.77300
1.6	0.06304	13.0	0.51220	45.5	1.79270
1.7	0.06698	13.5	0.53190	46.0	1.81240
1.8	0.07092	14.0	0.55160	46.5	1.83210
1.9	0.07486	14.5	0.57130	47.0	1.85180
2.0	0.07880	15.0	0.59100	47.5	1.87150
2.1	0.08274	15.5	0.61070	48.0	1.89120
2.2	0.08668	16.0	0.63040	48.5	1.91090
2.3	0.09062	16.5	0.65010	49.0	1.93060
2.4	0.09456	17.0	0.66980	49.5	1.95030
2.5	0.09850	17.5	0.68950	50.0	1.97000
2.6	0.10244	18.0	0.70920	51.0	2.00940
2.7	0.10638	18.5	0.72890	52.0	2.04880
2.8	0.11032	19.0	0.74860	53.0	2.08820
2.9	0.11426	19.5	0.76830	54.0	2.12760
3.0	0.11820	20.0	0.78800	55.0	2.16700
3.1	0.12214	20.5	0.80770	56.0	2.20640
3.2	0.12608	21.0	0.82740	57.0	2.24580
3.3	0.13002	21.5	0.84710	58.0	2.28520
3.4	0.13396	22.0	0.86680	59.0	2.32460
3.5	0.13790	22.5	0.88650	60.0	2.36400
3.6	0.14184	23.0	0.90620	61.0	2.40340
3.7	0.14578	23.5	0.92590	62.0	2.44280
3.8	0.14972	24.0	0.94560	63.0	2.48220
3.9	0.15366	24.5	0.96530	64.0	2.52160
4.0	0.15760	25.0	0.98500	65.0	2.56100
4.1	0.16154	25.5	1.00470	66.0	2.60040
4.2	0.16548	26.0	1.02440	67.0	2.63980
4.3	0.16942	26.5	1.04410	68.0	2.67920
4.4	0.17336	27.0	1.06380	69.0	2.71860
4.5	0.17730	27.5	1.08350	70.0	2.75800
4.6	0.18124	28.0	1.10320	71.0	2.79740
4.7	0.18518	28.5	1.12290	72.0	2.83680
4.8	0.18912	29.0	1.14260	73.0	2.87620
4.9	0.19306	29.5	1.16230	74.0	2.91560
5.0	0.19700	30.0	1.18200	75.0	2.95500
5.2	0.20488	30.5	1.20170	80.0	3.15200
5.4	0.21276	31.0	1.22140	85.0	3.34900
5.6	0.22064	31.5	1.24110	90.0	3.54600
5.8	0.22852	32.0	1.26080	100.0	3.94000
6.0	0.23640	32.5	1.28050	200.0	7.88000
6.2	0.24428	33.0	1.30020	400.0	15.76000
6.4	0.25216	33.5	1.31990	600.0	23.64000
6.6	0.26004	34.0	1.33960	800.0	31.52000
6.8	0.26792	34.5	1.35930	1000.0	39.40000
7.0	0.27580	35.0	1.37900	1200.0	47.28000
7.2	0.28368	35.5	1.39870	1600.0	63.04000
7.4	0.29156	36.0	1.41840	2000.0	78.80000
7.6	0.29944	36.5	1.43810	3200.0	126.08000
7.8	0.30732	37.0	1.45780		
8.0	0.31520	37.5	1.47750		

• °C/°F

(°C)	(°F)
- 70	- 94
- 65	- 85
- 55	- 67
- 50	- 58
- 40	- 40
0	32
37	98.6
80	176
125	257
150	302
170	338
200	392
250	482

• Pressure conversion

bar	psi	mmHg (torr)
10	145.0	7600
5	72.5	3800
2	29.0	1520
1	14.5	760
0.5	7.2	380
0.1	1.4	76

mbar	psi	torr (mmHg)
100	1.4	76
50	0.72	38
10	0.14	7.6
1.32	0.019	1

Компания «ЭлектроПласт» предлагает заключение долгосрочных отношений при поставках импортных электронных компонентов на взаимовыгодных условиях!

Наши преимущества:

- Оперативные поставки широкого спектра электронных компонентов отечественного и импортного производства напрямую от производителей и с крупнейших мировых складов;
- Поставка более 17-ти миллионов наименований электронных компонентов;
- Поставка сложных, дефицитных, либо снятых с производства позиций;
- Оперативные сроки поставки под заказ (от 5 рабочих дней);
- Экспресс доставка в любую точку России;
- Техническая поддержка проекта, помощь в подборе аналогов, поставка прототипов;
- Система менеджмента качества сертифицирована по Международному стандарту ISO 9001;
- Лицензия ФСБ на осуществление работ с использованием сведений, составляющих государственную тайну;
- Поставка специализированных компонентов (Xilinx, Altera, Analog Devices, Intersil, Interpoint, Microsemi, Aeroflex, Peregrine, Syfer, Eurofarad, Texas Instrument, Miteq, Cobham, E2V, MA-COM, Hittite, Mini-Circuits,General Dynamics и др.);

Помимо этого, одним из направлений компании «ЭлектроПласт» является направление «Источники питания». Мы предлагаем Вам помощь Конструкторского отдела:

- Подбор оптимального решения, техническое обоснование при выборе компонента;
- Подбор аналогов;
- Консультации по применению компонента;
- Поставка образцов и прототипов;
- Техническая поддержка проекта;
- Защита от снятия компонента с производства.

Как с нами связаться

Телефон: 8 (812) 309 58 32 (многоканальный)
Факс: 8 (812) 320-02-42
Электронная почта: org@eplast1.ru
Адрес: 198099, г. Санкт-Петербург, ул. Калинина, дом 2, корпус 4, литера А.