Precision Instrumentation Amplifier

AD524

FEATURES

Low noise: 0.3 µV p-p at 0.1 Hz to 10 Hz
Low nonlinearity: 0.003% (G = 1)
High CMRR: 120 dB (G = 1000)
Low offset voltage: 50 µV
Low offset voltage drift: 0.5 µV/°C
Gain bandwidth product: 25 MHz
Pin programmable gains of 1, 10, 100, 1000
Input protection, power-on/power-off
No external components required
Internally compensated
MIL-STD-883B and chips available
16-lead ceramic DIP and SOIC packages and 20-terminal leadless chip carrier available
Available in tape and reel in accordance with EIA-481A standard
Standard military drawing also available

FUNCTIONAL BLOCK DIAGRAM

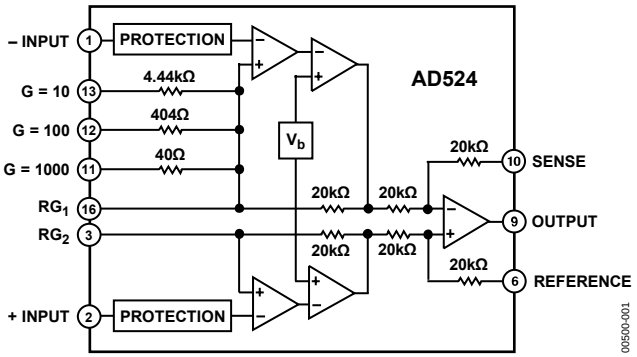

Figure 1.

GENERAL DESCRIPTION

The AD524 is a precision monolithic instrumentation amplifier designed for data acquisition applications requiring high accuracy under worst-case operating conditions. An outstanding combination of high linearity, high common-mode rejection, low offset voltage drift, and low noise makes the AD524 suitable for use in many data acquisition systems.

The AD524 has an output offset voltage drift of less than 25 µV/°C, input offset voltage drift of less than 0.5 µV/°C, CMR above 90 dB at unity gain (120 dB at G = 1000), and maximum nonlinearity of 0.003% at G = 1. In addition to the outstanding dc specifications, the AD524 also has a 25 kHz bandwidth (G = 1000). To make it suitable for high speed data acquisition systems, the AD524 has an output slew rate of 5 V/µs and settles in 15 µs to 0.01% for gains of 1 to 100.

As a complete amplifier, the AD524 does not require any external components for fixed gains of 1, 10, 100 and 1000. For other gain settings between 1 and 1000, only a single resistor is required. The AD524 input is fully protected for both power-on and power-off fault conditions.

The AD524 IC instrumentation amplifier is available in four different versions of accuracy and operating temperature range. The economical A grade, the low drift B grade, and lower drift, higher linearity C grade are specified from −25°C to +85°C. The S grade guarantees performance to specification over the extended temperature range −55°C to +125°C. The AD524 is available in a 16-lead ceramic DIP, 16-lead SBDIP, 16-lead SOIC wide packages, and 20-terminal leadless chip carrier.

PRODUCT HIGHLIGHTS

1. The AD524 has guaranteed low offset voltage, offset voltage drift, and low noise for precision high gain applications.
2. The AD524 is functionally complete with pin programmable gains of 1, 10, 100, and 1000, and single resistor programmable for any gain.
3. Input and output offset nulling terminals are provided for very high precision applications and to minimize offset voltage changes in gain ranging applications.
4. The AD524 is input protected for both power-on and power-off fault conditions.
5. The AD524 offers superior dynamic performance with a gain bandwidth product of 25 MHz, full power response of 75 kHz and a settling time of 15 µs to 0.01% of a 20 V step (G = 100).

Rev. F
Information furnished by Analog Devices is believed to be accurate and reliable. However, no responsibility is assumed by Analog Devices for its use, nor for any infringements of patents or other rights of third parties that may result from its use. Specifications subject to change without notice. No license is granted by implication or otherwise under any patent or patent rights of Analog Devices. Trademarks and registered trademarks are the property of their respective owners.

One Technology Way, P.O. Box 9106, Norwood, MA 02062-9106, U.S.A.
Tel: 781.329.4700 **www.analog.com**
Fax: 781.461.3113
©2007 Analog Devices, Inc. All rights reserved.

TABLE OF CONTENTS

Features ... 1
Functional Block Diagram ... 1
General Description ... 1
Product Highlights ... 1
Revision History ... 2
Specifications ... 3
Absolute Maximum Ratings ... 8
  Connection Diagrams ... 8
  ESD Caution ... 8
Typical Performance Characteristics ... 9
  Test Circuits ... 14
Theory of Operation ... 15
  Input Protection ... 15
  Input Offset and Output Offset ... 15
  Gain ... 16
  Input Bias Currents ... 17
  Common-Mode Rejection ... 17
  Grounding ... 18
  Sense Terminal ... 18
  Reference Terminal ... 18
  Programmable Gain ... 20
  Autozero Circuits ... 20
  Error Budget Analysis ... 21
Outline Dimensions ... 24
  Ordering Guide ... 25

REVISION HISTORY

11/07—Rev. E to Rev. F

Updated Format ... Universal
Changes to General Description ... 1
Changes to Figure 1 ... 1
Changes to Figure 3 and Figure 4 Captions ... 8
Changes to Error Budget Analysis Section ... 21
Changes to Ordering Guide ... 25

4/99—Rev. D to Rev. E

SPECIFICATIONS

@ V_S = ±15 V, R_L = 2 kΩ and T_A = +25°C, unless otherwise noted.

All min and max specifications are guaranteed. Specifications shown in **boldface** are tested on all production units at the final electrical test. Results from those tests are used to calculate outgoing quality levels.

Table 1.

	AD524A			AD524B			
Parameter	**Min**	**Typ**	**Max**	**Min**	**Typ**	**Max**	**Unit**
GAIN							
Gain Equation (External Resistor Gain Programming)		$\left[\frac{40{,}000}{R_G}+1\right]\pm 20\%$			$\left[\frac{40{,}000}{R_G}+1\right]\pm 20\%$		
Gain Range (Pin Programmable)		1 to 1000			1 to 1000		
Gain Error[1]							
G = 1			**±0.05**			**±0.03**	%
G = 10			**±0.25**			**±0.15**	%
G = 100			**±0.5**			**±0.35**	%
G = 1000			**±2.0**			**±1.0**	%
Nonlinearity							
G = 1			±0.01			±0.005	%
G = 10, G = 100			±0.01			±0.005	%
G = 1000			±0.01			±0.01	%
Gain vs. Temperature							
G = 1			5			5	ppm/°C
G = 10			15			10	ppm/°C
G = 100			35			25	ppm/°C
G = 1000			100			50	ppm/°C
VOLTAGE OFFSET (May be Nulled)							
Input Offset Voltage			**250**			**100**	µV
vs. Temperature			2			**0.75**	µV/°C
Output Offset Voltage			5			**3**	mV
vs. Temperature			100			**50**	µV
Offset Referred to the Input vs. Supply							
G = 1	**70**			**75**			dB
G = 10	**85**			**95**			dB
G = 100	**95**			**105**			dB
G = 1000	**100**			**110**			dB
INPUT CURRENT							
Input Bias Current			**±50**			**±25**	nA
vs. Temperature		±100			±100		pA/°C
Input Offset Current			**±35**			**±15**	nA
vs. Temperature		±100			±100		pA/°C

Parameter	AD524A Min	AD524A Typ	AD524A Max	AD524B Min	AD524B Typ	AD524B Max	Unit
INPUT							
Input Impedance							
Differential Resistance		10^9			10^9		Ω
Differential Capacitance		10			10		pF
Common-Mode Resistance		10^9			10^9		Ω
Common-Mode Capacitance		10			10		pF
Input Voltage Range							
Maximum Differential Input Linear (V_{DL})[2]	±10			±10			V
Maximum Common-Mode Linear (V_{CM})[2]		$12\ V - \left(\frac{G}{2} \times V_D\right)$			$12\ V - \left(\frac{G}{2} \times V_D\right)$		V
Common-Mode Rejection DC to 60 Hz with 1 kΩ Source Imbalance							V
G = 1	**70**			**75**			dB
G = 10	**90**			**95**			dB
G = 100	**100**			**105**			dB
G = 1000	**110**			**115**			dB
OUTPUT RATING							
V_{OUT}, R_L = 2 kΩ		±10			±10		V
DYNAMIC RESPONSE							
Small Signal – 3 dB							
G = 1		1			1		MHz
G = 10		400			400		kHz
G = 100		150			150		kHz
G = 1000		25			25		kHz
Slew Rate		5.0			5.0		V/µs
Settling Time to 0.01%, 20 V Step							
G = 1 to 100		15			15		µs
G = 1000		75			75		µs
NOISE							
Voltage Noise, 1 kHz							
RTI		7			7		nV/√Hz
RTO		90			90		nV√Hz
RTI, 0.1 Hz to 10 Hz							
G = 1		15			15		µV p-p
G = 10		2			2		µV p-p
G = 100, 1000		0.3			0.3		µV p-p
Current Noise							
0.1 Hz to 10 Hz		60			60		pA p-p
SENSE INPUT							
R_{IN}		20			20		kΩ ± 20%
I_{IN}		15			15		µA
Voltage Range	±10			±10			V
Gain to Output		1			1		%
REFERENCE INPUT							
R_{IN}		40			40		kΩ ± 20%
I_{IN}		15			15		µA
Voltage Range	±10			±10			V
Gain to Output		1			1		%

Parameter	AD524A Min	AD524A Typ	AD524A Max	AD524B Min	AD524B Typ	AD524B Max	Unit
TEMPERATURE RANGE							
Specified Performance	−25		+85	−25		+85	°C
Storage	−65		+150	−65		+150	°C
POWER SUPPLY							
Power Supply Range	**±6**	±15	**±18**	**±6**	±15	**±18**	V
Quiescent Current		3.5	**5.0**		3.5	**5.0**	mA

[1] Does not include effects of external resistor, R_G.
[2] V_{OL} is the maximum differential input voltage at G = 1 for specified nonlinearity.
V_{DL} at the maximum = 10 V/G.
V_D = actual differential input voltage.
Example: G = 10, V_D = 0.50.
V_{CM} = 12 V − (10/2 × 0.50 V) = 9.5 V.

@ V_S = ±15 V, R_L = 2 kΩ and T_A = +25°C, unless otherwise noted.

All min and max specifications are guaranteed. Specifications shown in **boldface** are tested on all production units at the final electrical test. Results from those tests are used to calculate outgoing quality levels.

Table 2.

Parameter	AD524C Min	AD524C Typ	AD524C Max	AD524S Min	AD524S Typ	AD524S Max	Unit
GAIN							
Gain Equation (External Resistor Gain Programming)		$\left[\frac{40{,}000}{R_G}+1\right]\pm 20\%$			$\left[\frac{40{,}000}{R_G}+1\right]\pm 20\%$		
Gain Range (Pin Programmable)		1 to 1000			1 to 1000		
Gain Error[1]							
G = 1			**±0.02**			**±0.05**	%
G = 10			**±0.1**			**±0.25**	%
G = 100			**±0.25**			**±0.5**	%
G = 1000			**±0.5**			**±2.0**	%
Nonlinearity							
G = 1			±0.003			±0.01	%
G = 10, G = 100			±0.003			±0.01	%
G = 1000			±0.01			±0.01	%
Gain vs. Temperature							
G = 1			5			5	ppm/°C
G = 10			10			10	ppm/°C
G = 100			25			25	ppm/°C
G = 1000			50			50	ppm/°C
VOLTAGE OFFSET (May be Nulled)							
Input Offset Voltage			**50**			**100**	µV
vs. Temperature			**0.5**			**2.0**	µV/°C
Output Offset Voltage			**2.0**			**3.0**	mV
vs. Temperature			**25**			**50**	µV
Offset Referred to the Input vs. Supply							
G = 1	**80**			**75**			dB
G = 10	**100**			**95**			dB
G = 100	**110**			**105**			dB
G = 1000	**115**			**110**			dB

Parameter	AD524C Min	AD524C Typ	AD524C Max	AD524S Min	AD524S Typ	AD524S Max	Unit
INPUT CURRENT							
Input Bias Current			**±15**			**±50**	nA
vs. Temperature		±100			±100		pA/°C
Input Offset Current			**±10**			**±35**	nA
vs. Temperature		±100			±100		pA/°C
INPUT							
Input Impedance							
Differential Resistance		10^9			10^9		Ω
Differential Capacitance		10			10		pF
Common-Mode Resistance		10^9			10^9		Ω
Common-Mode Capacitance		10			10		pF
Input Voltage Range							
Maximum Differential Input Linear (V_{DL})[2]	±10			±10			V
Maximum Common-Mode Linear (V_{CM})[2]		$12\ V - \left(\frac{G}{2} \times V_D\right)$			$12\ V - \left(\frac{G}{2} \times V_D\right)$		V
Common-Mode Rejection DC to 60 Hz with 1 kΩ Source Imbalance							V
G = 1	**80**			**70**			dB
G = 10	**100**			**90**			dB
G = 100	**110**			**100**			dB
G = 1000	**120**			**110**			dB
OUTPUT RATING							
V_{OUT}, R_L = 2 kΩ		±10			±10		V
DYNAMIC RESPONSE							
Small Signal – 3 dB							
G = 1		1			1		MHz
G = 10		400			400		kHz
G = 100		150			150		kHz
G = 1000		25			25		kHz
Slew Rate		5.0			5.0		V/µs
Settling Time to 0.01%, 20 V Step							
G = 1 to 100		15			15		µs
G = 1000		75			75		µs
NOISE							
Voltage Noise, 1 kHz							
RTI		7			7		nV/√Hz
RTO		90			90		nV√Hz
RTI, 0.1 Hz to 10 Hz							
G = 1		15			15		µV p-p
G = 10		2			2		µV p-p
G = 100, 1000		0.3			0.3		µV p-p
Current Noise							
0.1 Hz to 10 Hz		60			60		pA p-p
SENSE INPUT							
R_{IN}		20			20		kΩ ± 20%
I_{IN}		15			15		µA
Voltage Range	±10			±10			V
Gain to Output		1			1		%

Parameter	AD524C Min	AD524C Typ	AD524C Max	AD524S Min	AD524S Typ	AD524S Max	Unit
REFERENCE INPUT							
R_{IN}		40			40		kΩ ± 20%
I_{IN}		15			15		μA
Voltage Range	10			10			V
Gain to Output		1			1		%
TEMPERATURE RANGE							
Specified Performance	−25		+85	−55		+85	°C
Storage	−65		+150	−65		+150	°C
POWER SUPPLY							
Power Supply Range	**±6**	±15	**±18**	**±6**	±15	**±18**	V
Quiescent Current		3.5	**5.0**		3.5	**5.0**	mA

[1] Does not include effects of external resistor R_G.
[2] V_{OL} is the maximum differential input voltage at G = 1 for specified nonlinearity.
V_{DL} at the maximum = 10 V/G.
V_D = actual differential input voltage.
Example: G = 10, V_D = 0.50.
V_{CM} = 12 V − (10/2 × 0.50 V) = 9.5 V.

ABSOLUTE MAXIMUM RATINGS

Table 3.

Parameter	Rating
Supply Voltage	±18 V
Internal Power Dissipation	450 mW
Input Voltage[1]	
(Either Input Simultaneously) $\|V_{IN}\| + \|V_S\|$	<36 V
Output Short-Circuit Duration	Indefinite
Storage Temperature Range	
(R)	−65°C to +125°C
(D, E)	−65°C to +150°C
Operating Temperature Range	
AD524A/AD524B/AD524C	−25°C to +85°C
AD524S	−55°C to +125°C
Lead Temperature (Soldering, 60 sec)	+300°C

[1] Maximum input voltage specification refers to maximum voltage to which either input terminal may be raised with or without device power applied. For example, with ±18 volt supplies maximum, V_{IN} is ±18 V; with zero supply voltage maximum, V_{IN} is ±36 V.

Stresses above those listed under Absolute Maximum Ratings may cause permanent damage to the device. This is a stress rating only; functional operation of the device at these or any other conditions above those indicated in the operational section of this specification is not implied. Exposure to absolute maximum rating conditions for extended periods may affect device reliability.

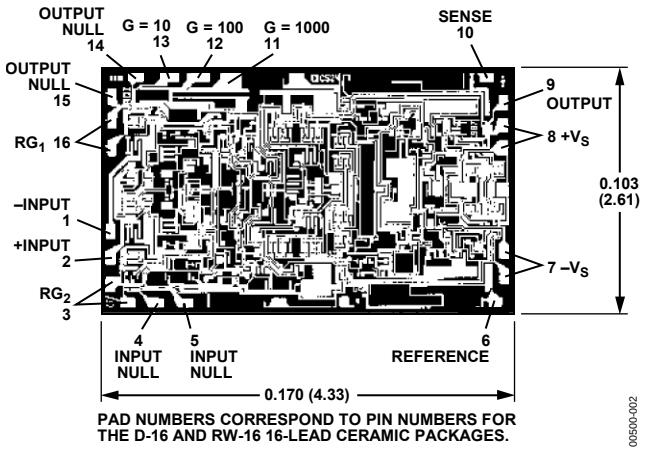

Figure 2. Metallization Photograph
Contact factory for latest dimensions;
Dimensions shown in inches and (mm)

CONNECTION DIAGRAMS

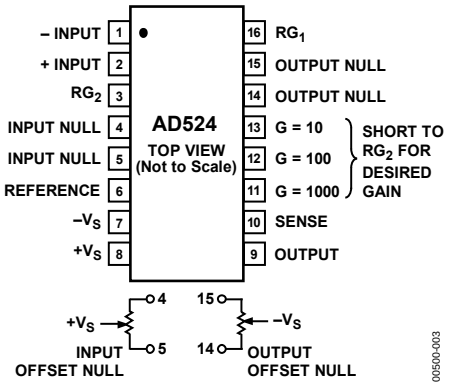

Figure 3. Ceramic (D) and
SOIC (RW-16 and D-16) Packages

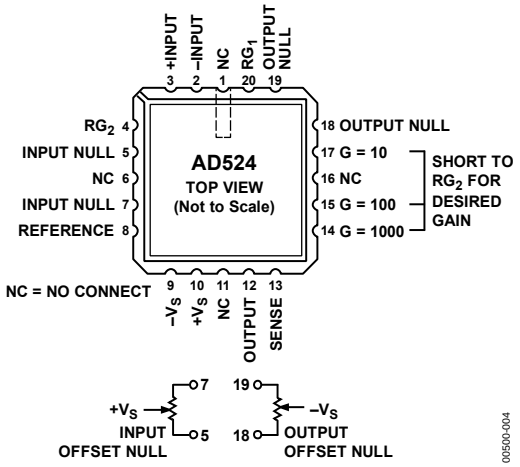

Figure 4. Leadless Chip Carrier (E)

ESD CAUTION

ESD (electrostatic discharge) sensitive device. Charged devices and circuit boards can discharge without detection. Although this product features patented or proprietary protection circuitry, damage may occur on devices subjected to high energy ESD. Therefore, proper ESD precautions should be taken to avoid performance degradation or loss of functionality.

TYPICAL PERFORMANCE CHARACTERISTICS

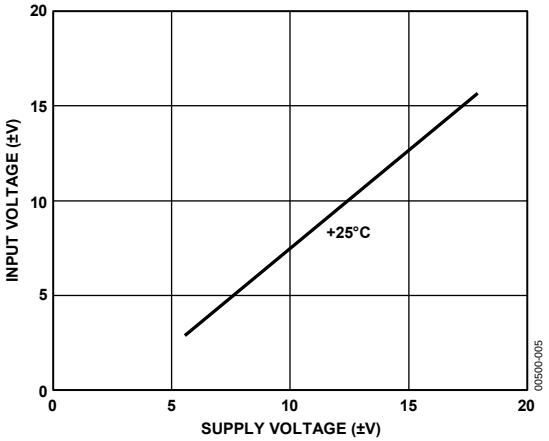

Figure 5. Input Voltage Range vs. Supply Voltage, G = 1

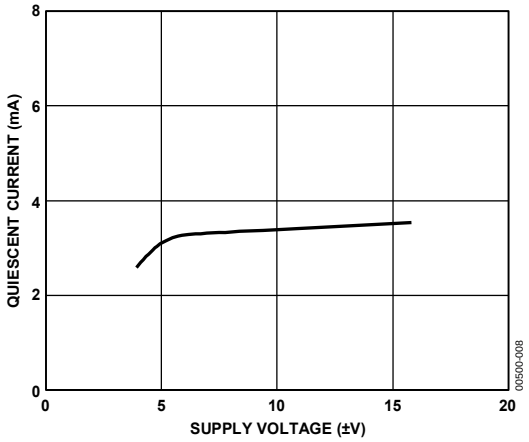

Figure 8. Quiescent Current vs. Supply Voltage

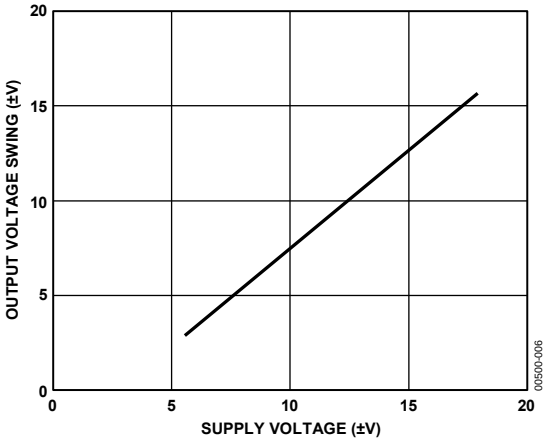

Figure 6. Output Voltage Swing vs. Supply Voltage

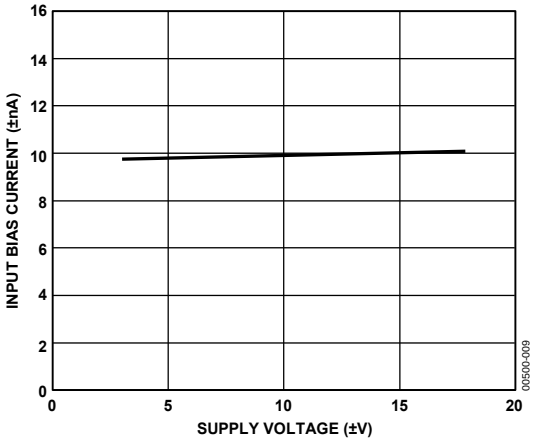

Figure 9. Input Bias Current vs. Supply Voltage

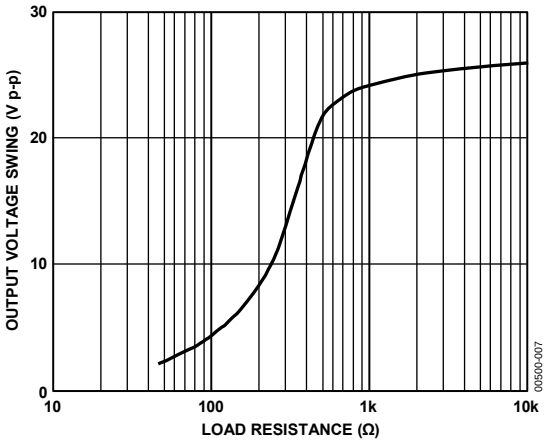

Figure 7. Output Voltage Swing vs. Load Resistance

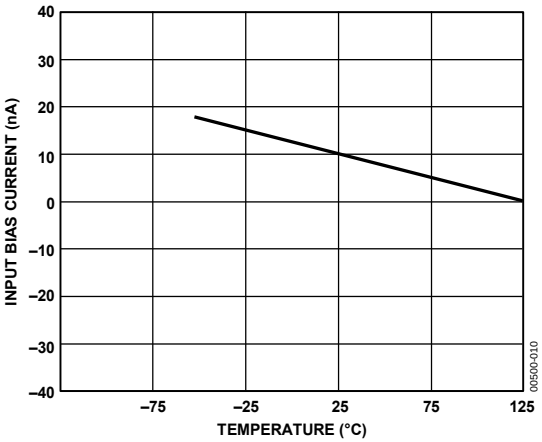

Figure 10. Input Bias Current vs. Temperature

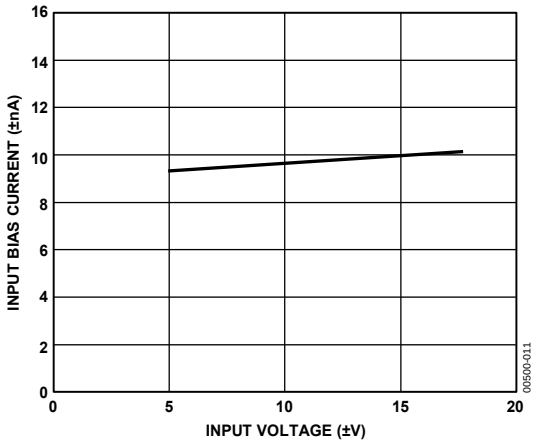

Figure 11. Input Bias Current vs. Input Voltage

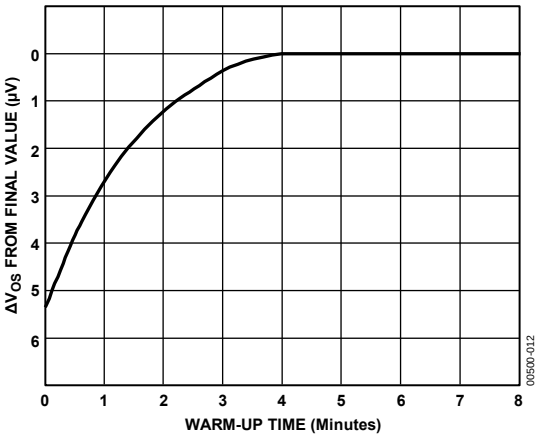

Figure 12. Offset Voltage, RTI, Turn-On Drift

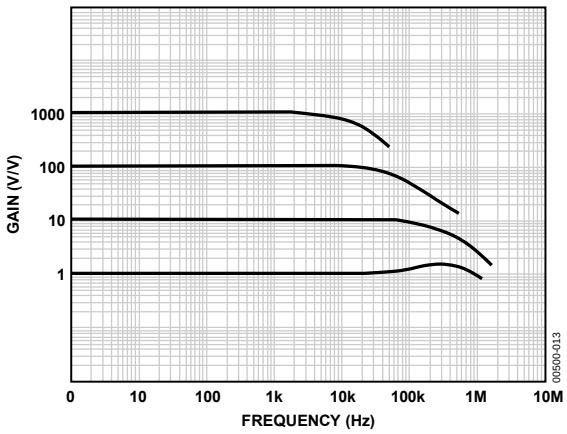

Figure 13. Gain vs. Frequency

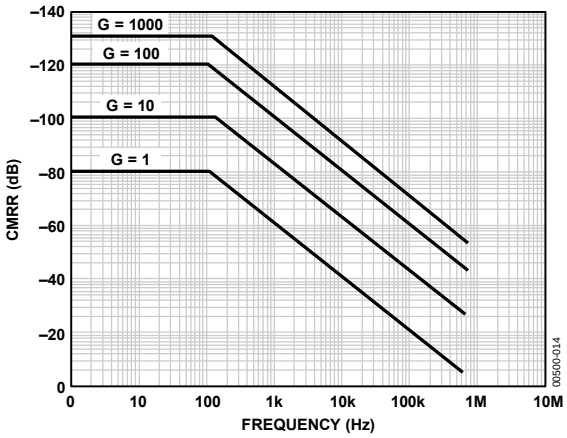

Figure 14. CMRR vs. Frequency, RTI, Zero to 1000 Source Imbalance

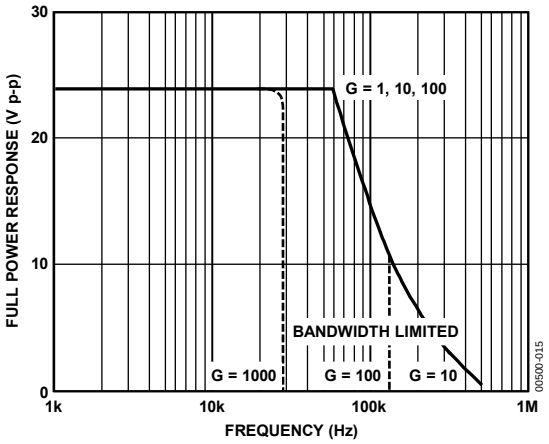

Figure 15. Large Signal Frequency Response

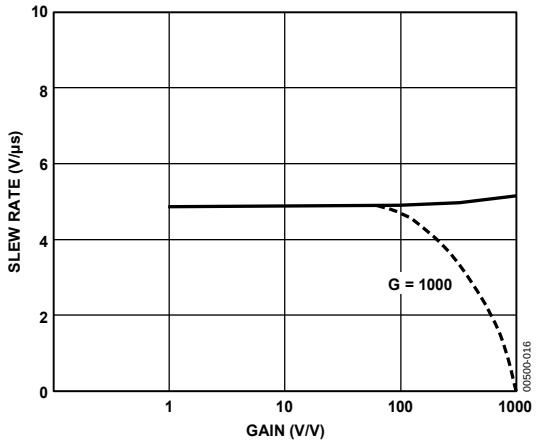

Figure 16. Slew Rate vs. Gain

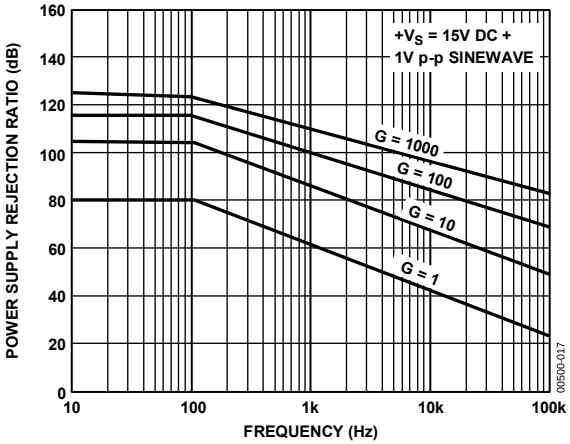

Figure 17. Positive PSRR vs. Frequency

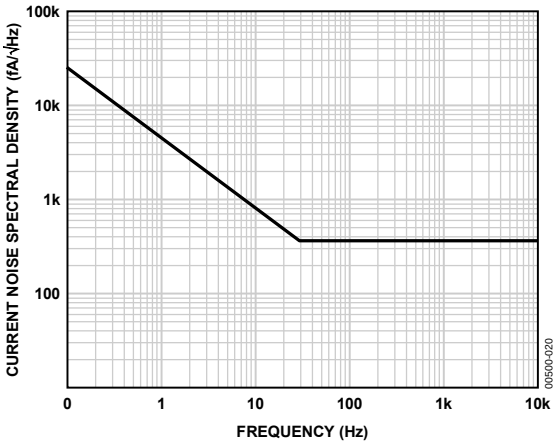

Figure 20. Input Current Noise vs. Frequency

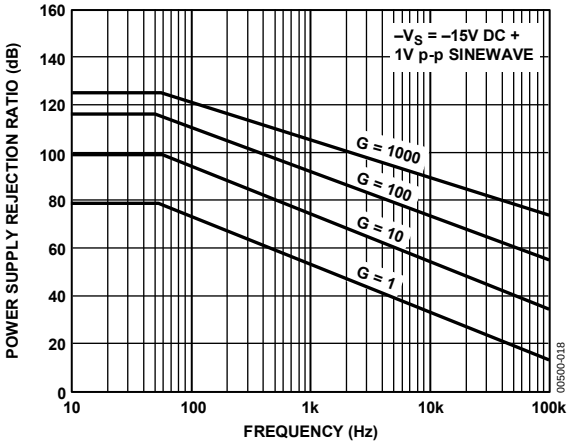

Figure 18. Negative PSRR vs. Frequency

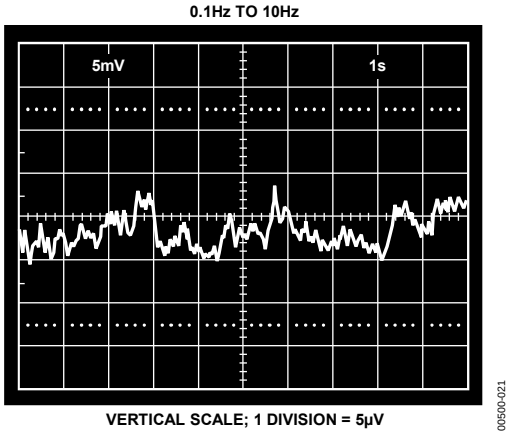

Figure 21. Low Frequency Noise, G = 1 (System Gain = 1000)

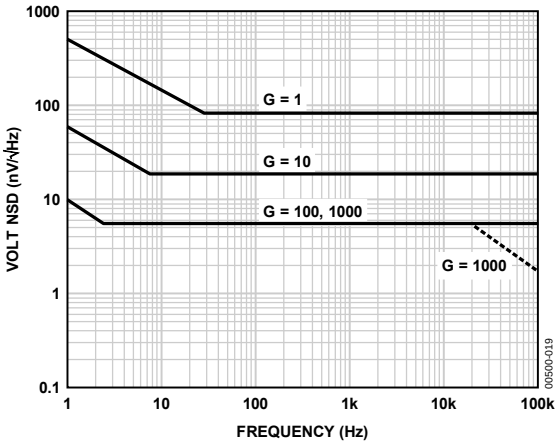

Figure 19. RTI Noise Spectral Density vs. Gain

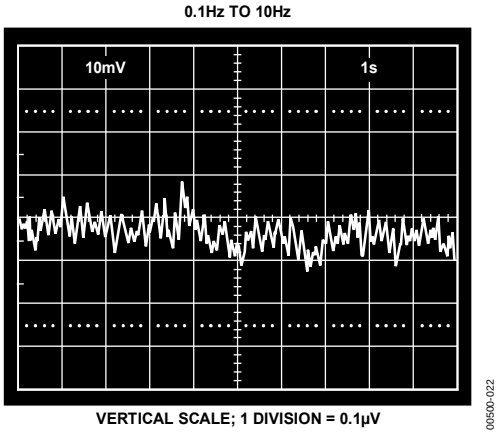

Figure 22. Low Frequency Noise, G = 1000 (System Gain = 100,000)

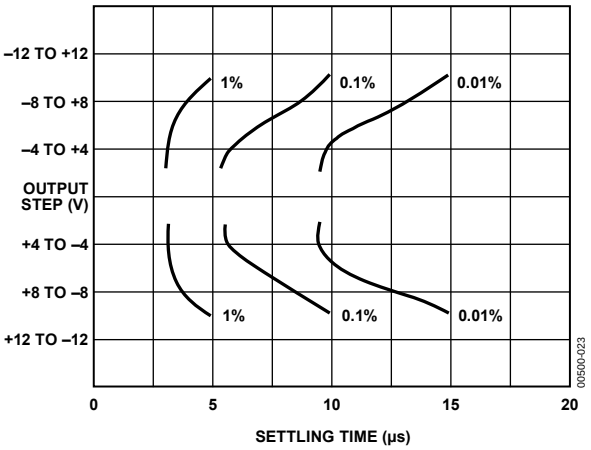

Figure 23. Settling Time, Gain = 1

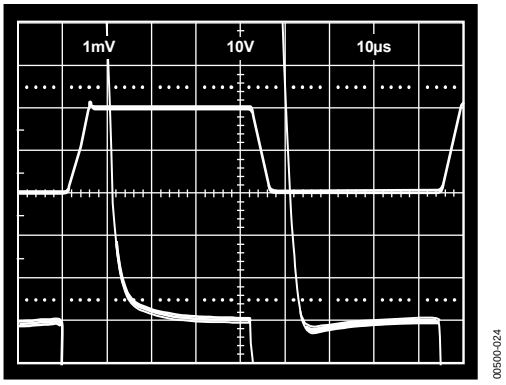

Figure 24. Large Signal Pulse Response and Settling Time, Gain =1

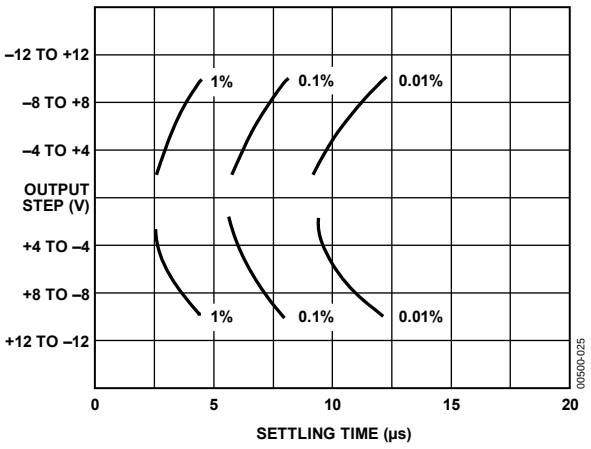

Figure 25. Settling Time, Gain = 10

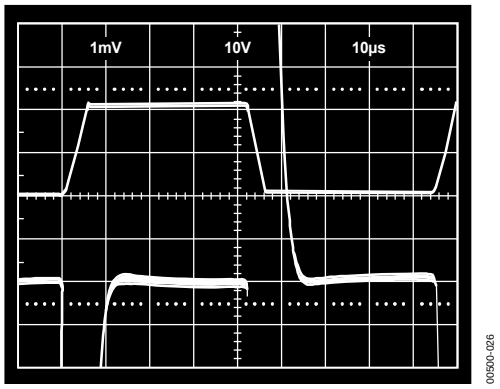

Figure 26. Large Signal Pulse Response and Settling Time, Gain = 10

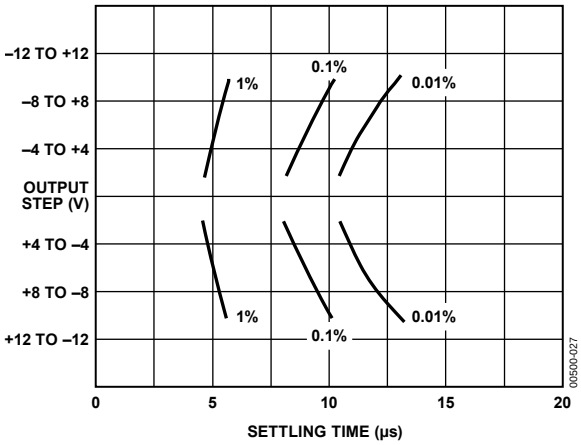

Figure 27. Settling Time, Gain = 100

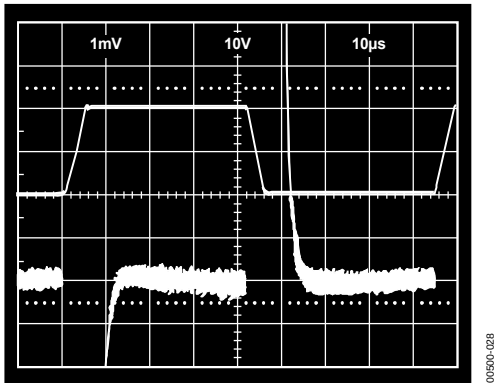

Figure 28. Large Signal Pulse Response and Settling Time, Gain = 100

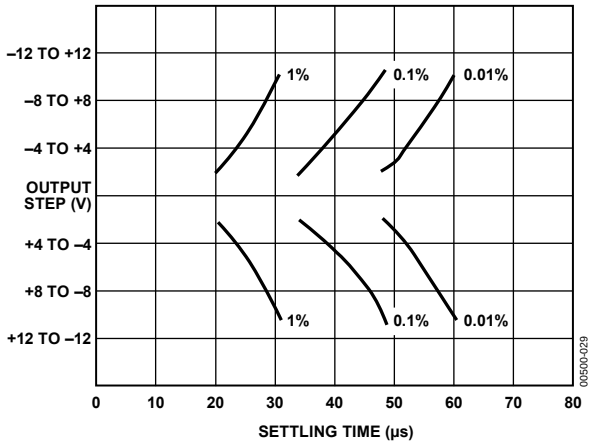

Figure 29. Settling Time, Gain = 1000

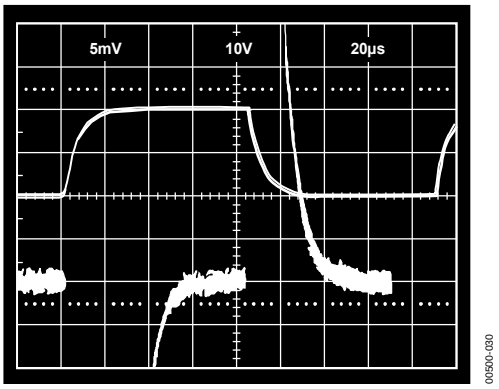

Figure 30. Large Signal Pulse Response and Settling Time, Gain = 1000

TEST CIRCUITS

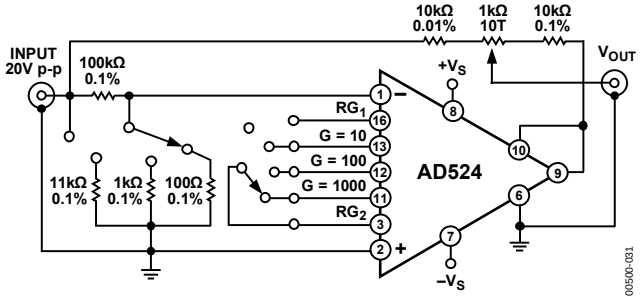

Figure 31. Settling Time Test Circuit

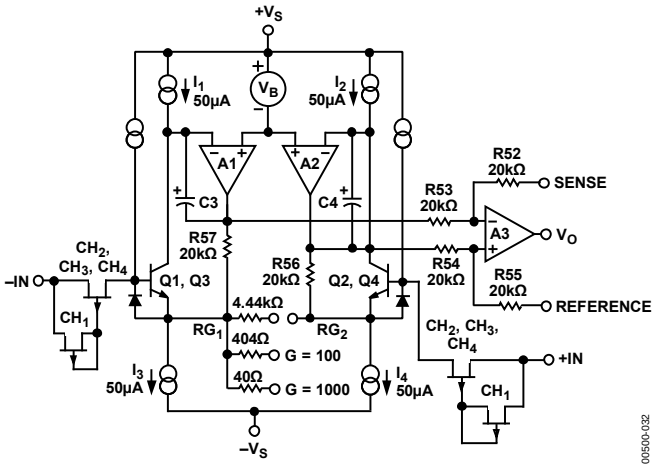

Figure 32. Simplified Circuit of Amplifier; Gain Is Defined as ((R56 + R57)/(R_G)) +1; For a Gain of 1, R_G Is an Open Circuit

THEORY OF OPERATION

The AD524 is a monolithic instrumentation amplifier based on the classic 3-op amp circuit. The advantage of monolithic construction is the closely matched components that enhance the performance of the input preamplifier. The preamplifier section develops the programmed gain by the use of feedback concepts. The programmed gain is developed by varying the value of R_G (smaller values increase the gain) while the feedback forces the collector currents (Q1, Q2, Q3, and Q4) to be constant, which impresses the input voltage across R_G.

As R_G is reduced to increase the programmed gain, the transconductance of the input preamplifier increases to the transconductance of the input transistors. This has three important advantages. First, this approach allows the circuit to achieve a very high open-loop gain of 3×10^8 at a programmed gain of 1000, thus reducing gain-related errors to a negligible 30 ppm. Second, the gain bandwidth product, which is determined by C3 or C4 and the input transconductance, reaches 25 MHz. Third, the input voltage noise reduces to a value determined by the collector current of the input transistors for an RTI noise of 7 nV/√Hz at G = 1000.

INPUT PROTECTION

As interface amplifiers for data acquisition systems, instrumentation amplifiers are often subjected to input overloads, that is, voltage levels in excess of the full scale for the selected gain range. At low gains (10 or less), the gain resistor acts as a current limiting element in series with the inputs. At high gains, the lower value of R_G does not adequately protect the inputs from excessive currents. Standard practice is to place series limiting resistors in each input, but to limit input current to below 5 mA with a full differential overload (36 V) requires over 7kΩ of resistance, which adds 10 nV√Hz of noise. To provide both input protection and low noise, a special series protection FET is used.

A unique FET design was used to provide a bidirectional current limit, thereby protecting against both positive and negative overloads. Under nonoverload conditions, three channels (CH_2, CH_3, CH_4) act as a resistance (≈1 kΩ) in series with the input as before. During an overload in the positive direction, a fourth channel, CH_1, acts as a small resistance (≈3 kΩ) in series with the gate, which draws only the leakage current, and the FET limits I_{DSS}. When the FET enhances under a negative overload, the gate current must go through the small FET formed by CH_1 and when this FET goes into saturation, the gate current is limited and the main FET goes into controlled enhancement. The bidirectional limiting holds the maximum input current to 3 mA over the 36 V range.

INPUT OFFSET AND OUTPUT OFFSET

Voltage offset specifications are often considered a figure of merit for instrumentation amplifiers. While initial offset may be adjusted to zero, shifts in offset voltage due to temperature variations causes errors. Intelligent systems can often correct this factor with an autozero cycle, but there are many small-signal high-gain applications that do not have this capability.

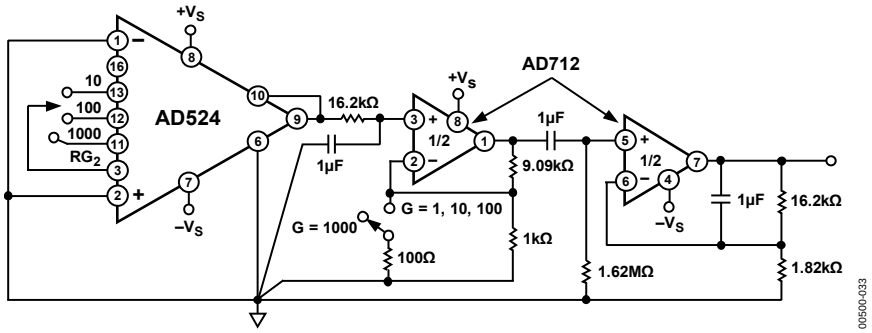

Figure 33. Noise Test Circuit

Voltage offset and drift comprise two components each; input and output offset and offset drift. Input offset is the component of offset that is directly proportional to gain, that is, input offset as measured at the output at G = 100 is 100 times greater than at G = 1. Output offset is independent of gain. At low gains, output offset drift is dominant, at high gains, input offset drift dominates. Therefore, the output offset voltage drift is normally specified as drift at G = 1 (where input effects are insignificant), whereas input offset voltage drift is given by drift specification at a high gain (where output offset effects are negligible). All input related numbers are referred to the input (RTI) that is the effect on the output is G times larger. Voltage offset vs. power supply is also specified at one or more gain settings and is also RTI.

By separating these errors, one can evaluate the total error independent of the gain setting used. In a given gain configuration, both errors can be combined to give a total error referred to the input (RTI) or output (RTO) by the following formulas:

Total error RTI = input error + (output error/gain)

Total error RTO = (gain × input error) + output error

As an illustration, a typical AD524 might have a +250 μV output offset and a −50 μV input offset. In a unity gain configuration, the total output offset would be 200 μV or the sum of the two. At a gain of 100, the output offset would be −4.75 mV or: +250 μV + 100(−50 μV) = −4.75 mV.

The AD524 provides for both input and output offset adjustment. This simplifies very high precision applications and minimizes offset voltage changes in switched gain applications. In such applications, the input offset is adjusted first at the highest programmed gain, then the output offset is adjusted at G = 1.

GAIN

The AD524 has internal high accuracy pretrimmed resistors for pin programmable gains of 1, 10, 100, and 1000. One of the preset gains can be selected by pin strapping the appropriate gain terminal and RG_2 together (for G = 1, RG_2 is not connected).

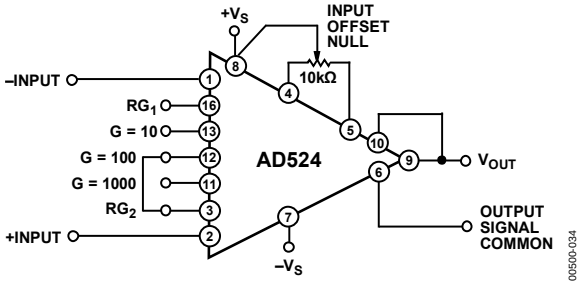

Figure 34. Operating Connections for G = 100

The AD524 can be configured for gains other than those that are internally preset; there are two methods to do this. The first method uses just an external resistor connected between Pin 3 and Pin 16 (see Figure 35), which programs the gain according to the following formula:

$$R_G = \frac{40\ \text{k}\Omega}{G - 1}$$

For best results, R_G should be a precision resistor with a low temperature coefficient. An external R_G affects both gain accuracy and gain drift due to the mismatch between it and the internal thin-film resistors. Gain accuracy is determined by the tolerance of the external R_G and the absolute accuracy of the internal resistors (±20%). Gain drift is determined by the mismatch of the temperature coefficient of R_G and the temperature coefficient of the internal resistors (−50 ppm/°C typical).

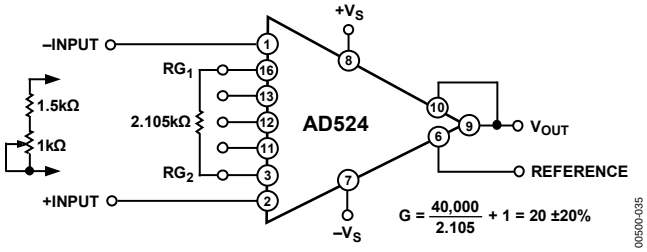

Figure 35. Operating Connections for G = 20

The second method uses the internal resistors in parallel with an external resistor (see Figure 36). This technique minimizes the gain adjustment range and reduces the effects of temperature coefficient sensitivity.

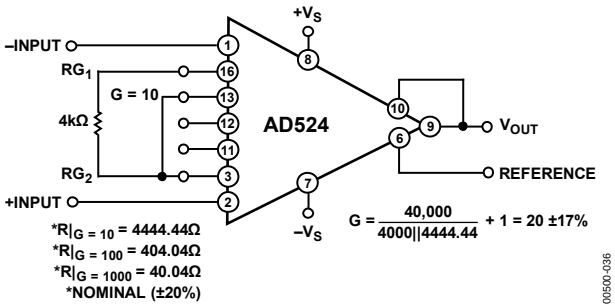

Figure 36. Operating Connections for G = 20, Low Gain Temperature Coefficient Technique

The AD524 can also be configured to provide gain in the output stage. Figure 37 shows an H pad attenuator connected to the reference and sense lines of the AD524. R1, R2, and R3 should be made as low as possible to minimize the gain variation and reduction of CMRR. Varying R2 precisely sets the gain without affecting CMRR. CMRR is determined by the match of R1 and R3.

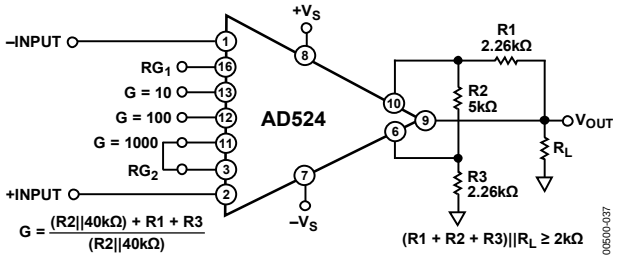

Figure 37. Gain of 2000

Table 4. Output Gain Resistor Values

Output Gain	R2	R1, R3	Nominal Gain
2	5 kΩ	2.26 kΩ	2.02
5	1.05 kΩ	2.05 kΩ	5.01
10	1 kΩ	4.42 kΩ	10.1

INPUT BIAS CURRENTS

Input bias currents are those currents necessary to bias the input transistors of a dc amplifier. Bias currents are an additional source of input error and must be considered in a total error budget. The bias currents, when multiplied by the source resistance, appear as an offset voltage. What is of concern in calculating bias current errors is the change in bias current with respect to signal voltage and temperature. Input offset current is the difference between the two input bias currents. The effect of offset current is an input offset voltage whose magnitude is the offset current times the source impedance imbalance.

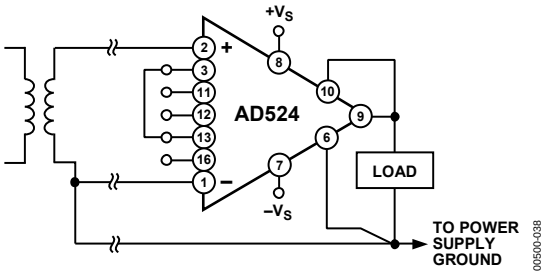

Figure 38. Indirect Ground Returns for Bias Currents—Transformer Coupled

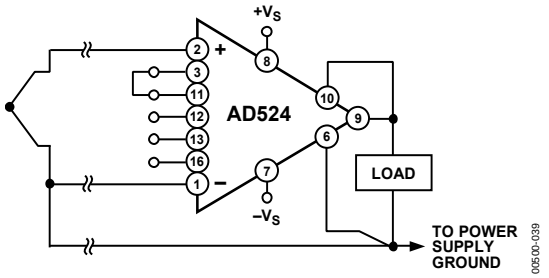

Figure 39. Indirect Ground Returns for Bias Currents—Thermocouple

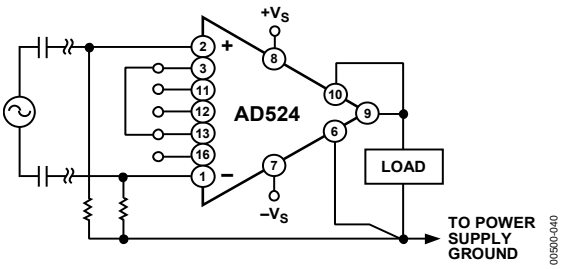

Figure 40. Indirect Ground Returns for Bias Currents–AC-Coupled

Although instrumentation amplifiers have differential inputs, there must be a return path for the bias currents. If this is not provided, those currents charge stray capacitances, causing the output to drift uncontrollably or to saturate. Therefore, when amplifying floating input sources such as transformers and thermocouples, as well as ac-coupled sources, there must still be a dc path from each input to ground.

COMMON-MODE REJECTION

Common-mode rejection is a measure of the change in output voltage when both inputs are changed equal amounts. These specifications are usually given for a full-range input voltage change and a specified source imbalance. Common-mode rejection ratio (CMRR) is a ratio expression whereas common-mode rejection (CMR) is the logarithm of that ratio. For example, a CMRR of 10,000 corresponds to a CMR of 80 dB.

In an instrumentation amplifier, ac common-mode rejection is only as good as the differential phase shift. Degradation of ac common-mode rejection is caused by unequal drops across differing track resistances and a differential phase shift due to varied stray capacitances or cable capacitances. In many applications, shielded cables are used to minimize noise. This technique can create common-mode rejection errors unless the shield is properly driven. Figure 41 and Figure 42 show active data guards that are configured to improve ac common-mode rejection by bootstrapping the capacitances of the input cabling, thus minimizing differential phase shift.

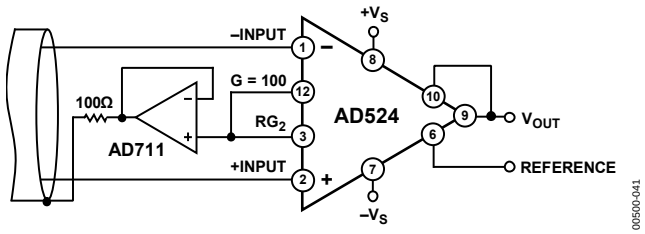

Figure 41. Shield Driver, G ≥ 100

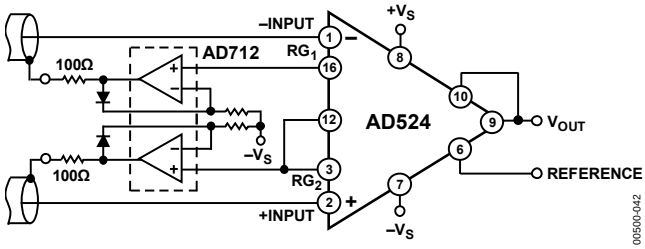

Figure 42. Differential Shield Driver

GROUNDING

Many data acquisition components have two or more ground pins that are not connected together within the device. These grounds must be tied together at one point, usually at the system power-supply ground. Ideally, a single solid ground would be desirable. However, because current flows through the ground wires and etch stripes of the circuit cards, and because these paths have resistance and inductance, hundreds of millivolts can be generated between the system ground point and the data acquisition components. Separate ground returns should be provided to minimize the current flow in the path from the sensitive points to the system ground point. In this way, supply currents and logic-gate return currents are not summed into the same return path as analog signals where they would cause measurement errors.

Because the output voltage is developed with respect to the potential on the reference terminal, an instrumentation amplifier can solve many grounding problems.

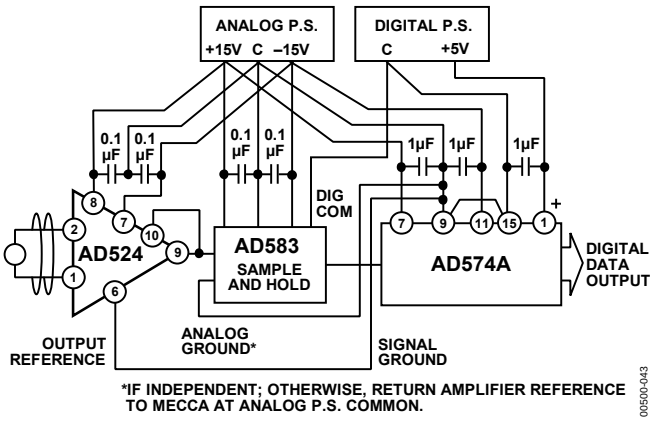

Figure 43. Basic Grounding Practice

SENSE TERMINAL

The sense terminal is the feedback point for the instrument amplifier's output amplifier. Normally, it is connected to the instrument amplifier output. If heavy load currents are to be drawn through long leads, voltage drops due to current flowing through lead resistance can cause errors. The sense terminal can be wired to the instrument amplifier at the load, thus putting the IxR drops inside the loop and virtually eliminating this error source.

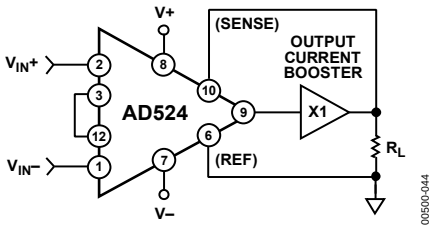

Figure 44. AD524 Instrumentation Amplifier with Output Current Booster

Typically, IC instrumentation amplifiers are rated for a full ±10 volt output swing into 2 kΩ. In some applications, however, the need exists to drive more current into heavier loads. Figure 44 shows how a high current booster may be connected inside the loop of an instrumentation amplifier to provide the required current boost without significantly degrading overall performance. Nonlinearities and offset and gain inaccuracies of the buffer are minimized by the loop gain of the AD524 output amplifier. Offset drift of the buffer is similarly reduced.

REFERENCE TERMINAL

The reference terminal can be used to offset the output by up to ±10 V. This is useful when the load is floating or does not share a ground with the rest of the system. It also provides a direct means of injecting a precise offset. It must be remembered that the total output swing is ±10 V to be shared between signal and reference offset.

When the AD524 is of the 3-amplifier configuration it is necessary that nearly zero impedance be presented to the reference terminal.

Any significant resistance from the reference terminal to ground increases the gain of the noninverting signal path, thereby upsetting the common-mode rejection of the AD524.

In the AD524, a reference source resistance unbalances the CMR trim by the ratio of 20 kΩ/R_{REF}. For example, if the reference source impedance is 1 Ω, CMR is reduced to 86 dB (20 kΩ/1 Ω = 86 dB). An operational amplifier can be used to provide that low impedance reference point, as shown in Figure 45. The input offset voltage characteristics of that amplifier adds directly to the output offset voltage performance of the instrumentation amplifier.

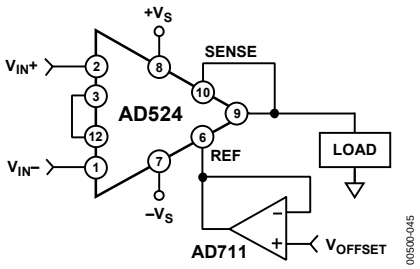

Figure 45. Use of Reference Terminal to Provide Output Offset

An instrumentation amplifier can be turned into a voltage-to-current converter by taking advantage of the sense and reference terminals, as shown in Figure 46.

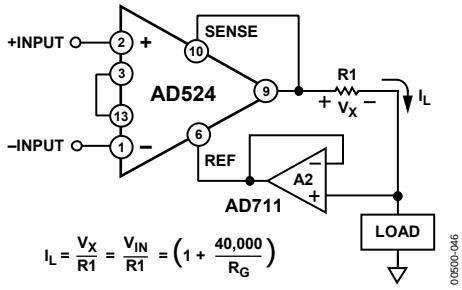

Figure 46. Voltage-to-Current Converter

By establishing a reference at the low side of a current setting resistor, an output current may be defined as a function of input voltage, gain, and the value of that resistor. Because only a small current is demanded at the input of the buffer amplifier (A2) the forced current, I_L, largely flows through the load. Offset and drift specifications of A2 must be added to the output offset and drift specifications of the AD524.

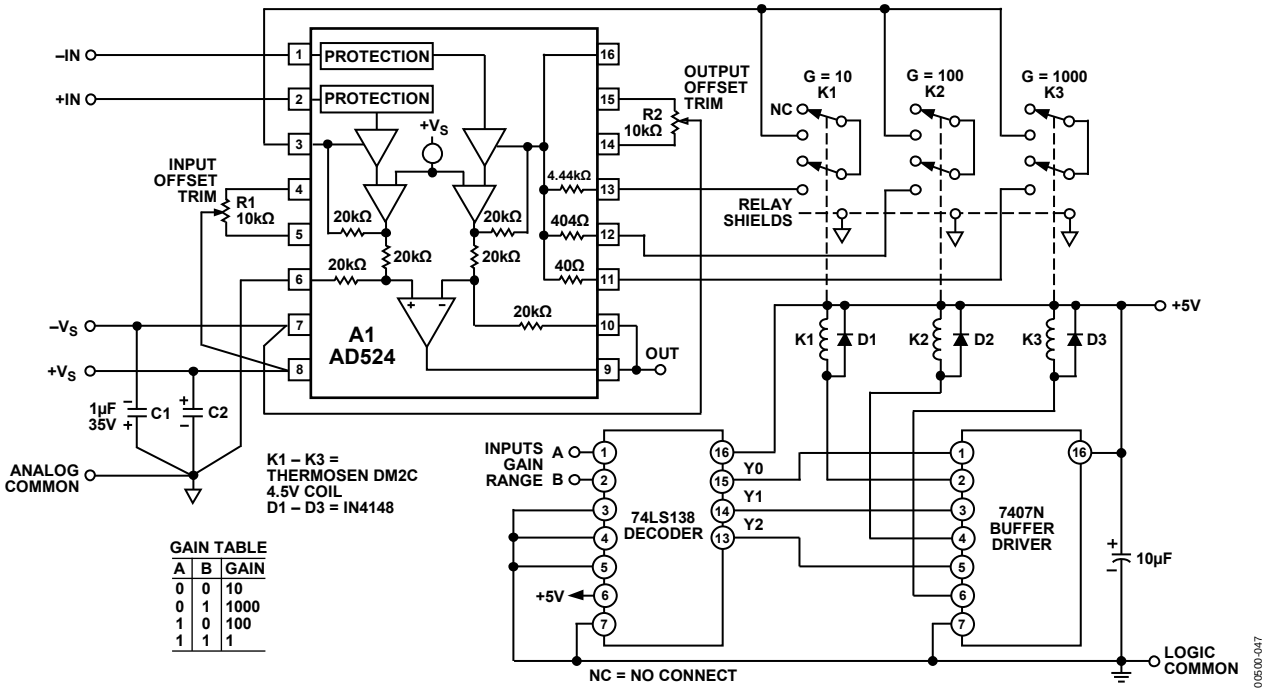

GAIN TABLE

A	B	GAIN
0	0	10
0	1	1000
1	0	100
1	1	1

Figure 47. Three-Decade Gain Programmable Amplifier

PROGRAMMABLE GAIN

Figure 47 shows the AD524 being used as a software programmable gain amplifier. Gain switching can be accomplished with mechanical switches such as DIP switches or reed relays. It should be noted that the on resistance of the switch in series with the internal gain resistor becomes part of the gain equation and has an effect on gain accuracy.

The AD524 can also be connected for gain in the output stage. Figure 48 shows an AD711 used as an active attenuator in the output amplifier's feedback loop. The active attenuation presents very low impedance to the feedback resistors, therefore minimizing the common-mode rejection ratio degradation.

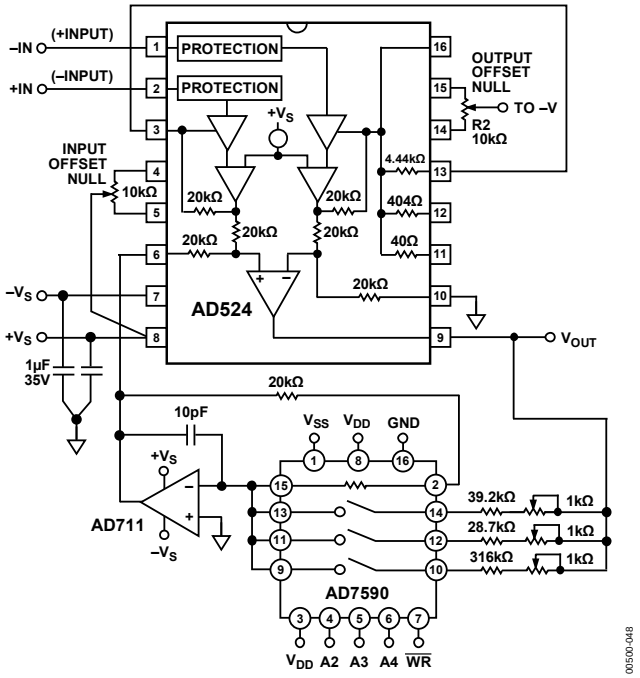

Figure 48. Programmable Output Gain

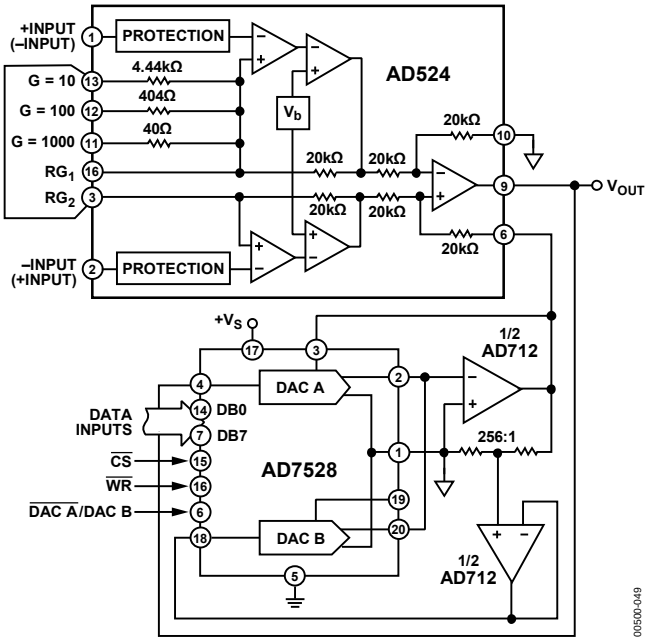

Figure 49. Programmable Output Gain Using a DAC

Another method for developing the switching scheme is to use a DAC. The AD7528 dual DAC, which acts essentially as a pair of switched resistive attenuators having high analog linearity and symmetrical bipolar transmission, is ideal in this application. The multiplying DAC's advantage is that it can handle inputs of either polarity or zero without affecting the programmed gain. The circuit shown uses an AD7528 to set the gain (DAC A) and to perform a fine adjustment (DAC B).

AUTOZERO CIRCUITS

In many applications, it is necessary to provide very accurate data in high gain configurations. At room temperature, the offset effects can be nulled by the use of offset trim potentiometers. Over the operating temperature range, however, offset nulling becomes a problem. The circuit of Figure 50 shows a CMOS DAC operating in bipolar mode and connected to the reference terminal to provide software controllable offset adjustments.

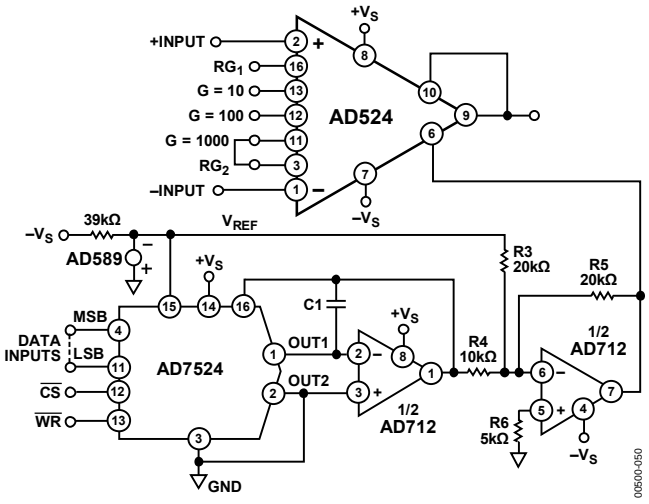

Figure 50. Software Controllable Offset

In many applications, complex software algorithms for autozero applications are not available. For those applications, Figure 51 provides a hardware solution.

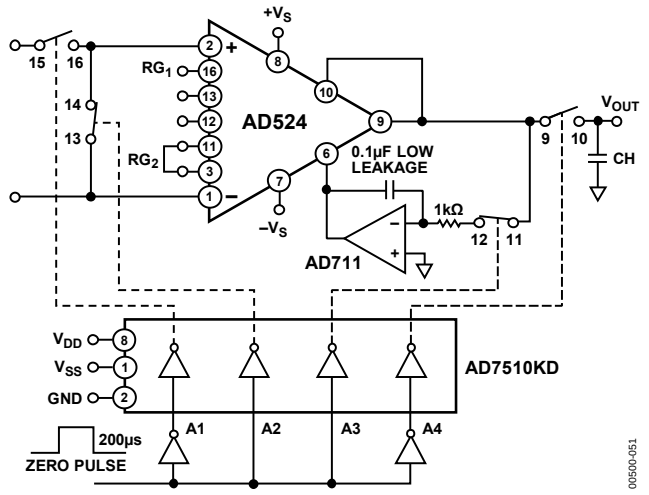

Figure 51. Autozero Circuit

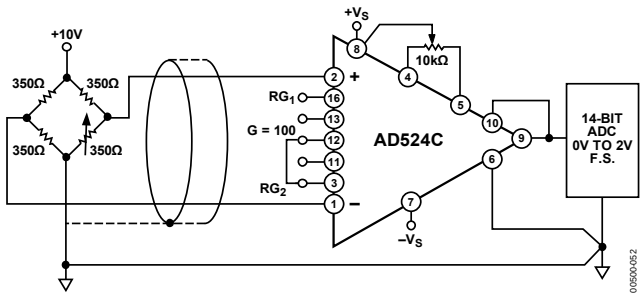

Figure 52. Typical Bridge Application

ERROR BUDGET ANALYSIS

To illustrate how instrumentation amplifier specifications are applied, review a typical case where an AD524 is required to amplify the output of an unbalanced transducer. Figure 52 shows a differential transducer, unbalanced by 100 Ω, supplying a 0 mV to 20 mV signal to an AD524C. The output of the I_A feeds a 14-bit ADC with a 0 V to 2 V input voltage range. The operating temperature range is −25°C to +85°C. Therefore, the largest change in temperature, ΔT, within the operating range is from ambient to +85°C (85°C − 25°C = 60°C).

In many applications, differential linearity and resolution are of prime importance in cases where the absolute value of a variable is less important than changes in value. In these applications, only the irreducible errors (45 ppm = 0.004%) are significant. Furthermore, if a system has an intelligent processor monitoring the analog-to-digital output, the addition of an autogain/autozero cycle removes all reducible errors and may eliminate the requirement for initial calibration. This also reduces errors to 0.004%.

Table 5. Error Budget Analysis

Error Source	AD524C Specifications	Calculation	Effect on Absolute Accuracy at T_A = 25°C	Effect on Absolute Accuracy at T_A = 85°C	Effect on Resolution
Gain Error	±0.25%	±0.25% = 2500 ppm	2500 ppm	2500 ppm	–
Gain Instability	25 ppm	(25 ppm/°C)(60°C) = 1500 ppm	–	1500 ppm	–
Gain Nonlinearity	±0.003%	±0.003% = 30 ppm	–	–	30 ppm
Input Offset Voltage	±50 µV, RTI	±50 µV/20 mV = ±2500 ppm	2500 ppm	2500 ppm	–
Input Offset Voltage Drift	±0.5 µV/°C –	(±0.5 µV/°C)(60°C) = 30 µV 30 µV/20 mV = 1500 ppm	–	1500 ppm	–
Output Offset Voltage[1]	±2.0 mV	±2.0 mV/20 mV = 1000 ppm	1000 ppm	1000 ppm	–
Output Offset Voltage Drift[1]	±25 µV/°C	(±25 µV/°C)(60°C)= 1500 µV 1500 µV/20 mV = 750 ppm	–	750 ppm	–
Bias Current-Source Imbalance Error	±15 nA	(±15 nA)(100 Ω) = 1.5 µV 1.5 µV/20 mV = 75 ppm	75 ppm	75 ppm	–
Bias Current-Source Imbalance Drift	±100 pA/°C	(±100 pA/°C)(100 Ω)(60°C) = 0.6 µV 0.6 µV/20 mV = 30 ppm	–	30 ppm	–
Offset Current-Source Imbalance Error	±10 nA	(±10 nA)(100 Ω) = 1 µV 1 µV/20 mV = 50 ppm	50 ppm	50 ppm	–
Offset Current-Source Imbalance Drift	±100 pA/°C	(100 pA/°C)(100 Ω)(60°C) = 0.6 µV 0.6 µV/20 mV = 30 ppm	–	30 ppm	–
Offset Current-Source Resistance-Error	±10 nA	(10 nA)(175 Ω) = 3.5 µV 3.5 µV/20 mV = 87.5 ppm	87.5 ppm	87.5 ppm	–
Offset Current-Source Resistance-Drift	±100 pA/°C	(100 pA/°C)(175 Ω)(60°C) = 1 µV 1 µV/20 mV = 50 ppm	–	50 ppm	–
Common Mode Rejection 5 V DC	115 dB	115 dB = 1.8 ppm × 5 V = 8.8 µV 8.8 µV/20 mV = 444 ppm	444 ppm	444 ppm	–
Noise, RTI (0.1 Hz to 10 Hz)	0.3 µV p-p	0.3 µV p-p/20 mV = 15 ppm	–	–	15 ppm
		Total Error	6656.5 ppm	10516.5 ppm	45 ppm

[1] Output offset voltage and output offset voltage drift are given as RTI figures.

Figure 53 shows a simple application in which the variation of the cold-junction voltage of a Type J thermocouple-iron ± constantan is compensated for by a voltage developed in series by the temperature-sensitive output current of an AD590 semiconductor temperature sensor.

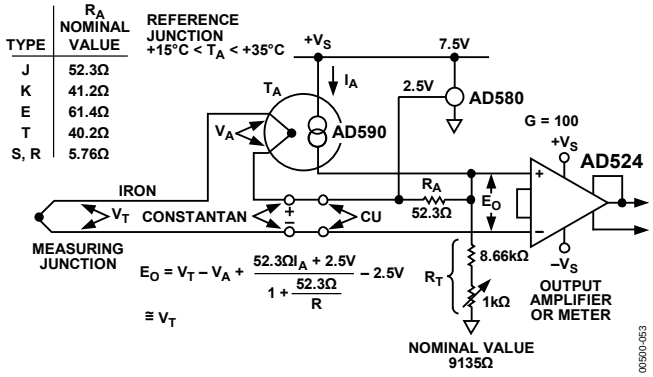

Figure 53. Cold-Junction Compensation

The circuit is calibrated by adjusting R_T for proper output voltage with the measuring junction at a known reference temperature and the circuit near 25°C. If resistors with low temperature coefficients are used, compensation accuracy is to within ±0.5°C, for temperatures between +15°C and +35°C.

Other thermocouple types may be accommodated with the standard resistance values shown in Table 5. For other ranges of ambient temperature, the equation in Figure 53 may be solved for the optimum values of R_T and R_A.

The microprocessor controlled data acquisition system shown in Figure 54 includes both autozero and autogain capability. By dedicating two of the differential inputs, one to ground and one to the A/D reference, the proper program calibration cycles can eliminate both initial accuracy errors and accuracy errors over temperature. The autozero cycle, in this application, converts a number that appears to be ground and then writes that same number (8-bit) to the AD7524, which eliminates the zero error. Because its output has an inverted scale, the autogain cycle converts the A/D reference and compares it with full scale. A multiplicative correction factor is then computed and applied to subsequent readings.

For a comprehensive study of instrumentation amplifier design and applications, refer to the *Designer's Guide to Instrumentation Amplifiers (3rd Edition)*, available free from Analog Devices, Inc.

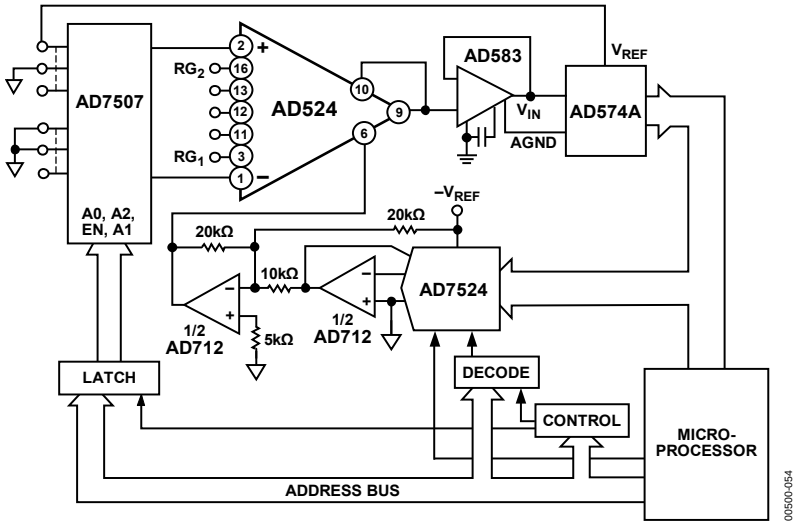

Figure 54. Microprocessor Controlled Data Acquisition System

OUTLINE DIMENSIONS

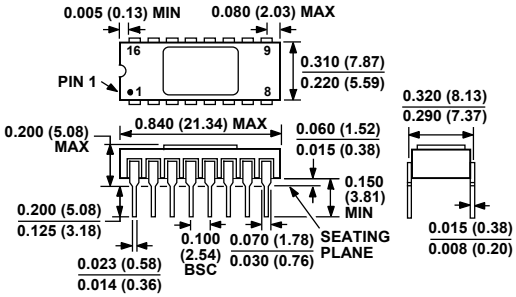

CONTROLLING DIMENSIONS ARE IN INCHES; MILLIMETER DIMENSIONS (IN PARENTHESES) ARE ROUNDED-OFF INCH EQUIVALENTS FOR REFERENCE ONLY AND ARE NOT APPROPRIATE FOR USE IN DESIGN.

Figure 55. 16-Lead Side-Brazed Ceramic Dual In-Line [SBDIP] (D-16)
Dimensions shown in inches and (millimeters)

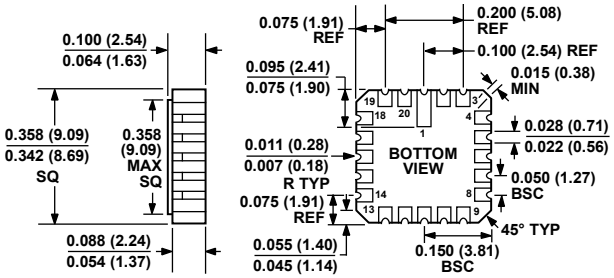

CONTROLLING DIMENSIONS ARE IN INCHES; MILLIMETER DIMENSIONS (IN PARENTHESES) ARE ROUNDED-OFF INCH EQUIVALENTS FOR REFERENCE ONLY AND ARE NOT APPROPRIATE FOR USE IN DESIGN.

022106-A

Figure 56. 20-Terminal Ceramic Leadless Chip Carrier [LCC] (E-20)
Dimensions shown in inches and (millimeters)

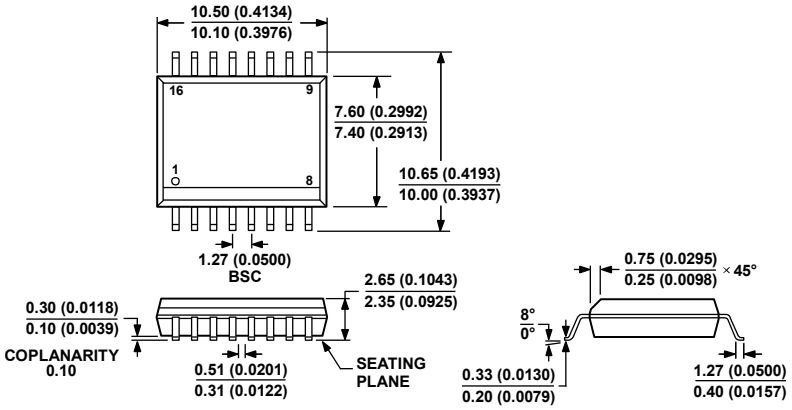

COMPLIANT TO JEDEC STANDARDS MS-013-AA
CONTROLLING DIMENSIONS ARE IN MILLIMETERS; INCH DIMENSIONS (IN PARENTHESES) ARE ROUNDED-OFF MILLIMETER EQUIVALENTS FOR REFERENCE ONLY AND ARE NOT APPROPRIATE FOR USE IN DESIGN.

032707-B

Figure 57. 16-Lead Standard Small Outline Package [SOIC_W] Wide Body (RW-16)
Dimensions shown in millimeters and (inches)

ORDERING GUIDE

Model	Temperature Range	Package Description	Package Option
AD524AD	−40°C to +85°C	16-Lead SBDIP	D-16
AD524ADZ[1]	−40°C to +85°C	16-Lead SBDIP	D-16
AD524AE	−40°C to +85°C	20-Terminal LCC	E-20
AD524AR-16	−40°C to +85°C	16-Lead SOIC_W	RW-16
AD524AR-16-REEL	−40°C to +85°C	16-Lead SOIC_W, 13" Tape and Reel	RW-16
AD524AR-16-REEL7	−40°C to +85°C	16-Lead SOIC_W, 7" Tape and Reel	RW-16
AD524ARZ-16[1]	−40°C to +85°C	16-Lead SOIC_W	RW-16
AD524ARZ-16-REEL7[1]	−40°C to +85°C	16-Lead SOIC_W, 7″Tape and Reel	RW-16
AD524BD	−40°C to +85°C	16-Lead SBDIP	D-16
AD524BDZ[1]	−40°C to +85°C	16-Lead SBDIP	D-16
AD524BE	−40°C to +85°C	20-Terminal LCC	E-20
AD524CD	−40°C to +85°C	16-Lead SBDIP	D-16
AD524CDZ[1]	−40°C to +85°C	16-Lead SBDIP	D-16
AD524SD	−55°C to +125°C	16-Lead SBDIP	D-16
AD524SD/883B	−55°C to +125°C	16-Lead SBDIP	D-16
5962-8853901EA[2]	−55°C to +125°C	16-Lead SBDIP	D-16
AD524SE/883B	−55°C to +125°C	20-Terminal LCC	E-20
AD524SCHIPS	−55°C to +125°C	Die	

[1] Z = RoHS Compliant Part.
[2] Refer to the official DESC drawing for tested specifications.

NOTES

NOTES

NOTES

©2007 Analog Devices, Inc. All rights reserved. Trademarks and registered trademarks are the property of their respective owners.
D00500-0-11/07(F)

Компания «ЭлектроПласт» предлагает заключение долгосрочных отношений при поставках импортных электронных компонентов на взаимовыгодных условиях!

Наши преимущества:

- Оперативные поставки широкого спектра электронных компонентов отечественного и импортного производства напрямую от производителей и с крупнейших мировых складов;
- Поставка более 17-ти миллионов наименований электронных компонентов;
- Поставка сложных, дефицитных, либо снятых с производства позиций;
- Оперативные сроки поставки под заказ (от 5 рабочих дней);
- Экспресс доставка в любую точку России;
- Техническая поддержка проекта, помощь в подборе аналогов, поставка прототипов;
- Система менеджмента качества сертифицирована по Международному стандарту ISO 9001;
- Лицензия ФСБ на осуществление работ с использованием сведений, составляющих государственную тайну;
- Поставка специализированных компонентов (Xilinx, Altera, Analog Devices, Intersil, Interpoint, Microsemi, Aeroflex, Peregrine, Syfer, Eurofarad, Texas Instrument, Miteq, Cobham, E2V, MA-COM, Hittite, Mini-Circuits,General Dynamics и др.);

Помимо этого, одним из направлений компании «ЭлектроПласт» является направление «Источники питания». Мы предлагаем Вам помощь Конструкторского отдела:

- Подбор оптимального решения, техническое обоснование при выборе компонента;
- Подбор аналогов;
- Консультации по применению компонента;
- Поставка образцов и прототипов;
- Техническая поддержка проекта;
- Защита от снятия компонента с производства.

Как с нами связаться

Телефон: 8 (812) 309 58 32 (многоканальный)
Факс: 8 (812) 320-02-42
Электронная почта: org@eplast1.ru
Адрес: 198099, г. Санкт-Петербург, ул. Калинина, дом 2, корпус 4, литера А.