RoHS

Qxx25xx & Qxx25xHx Series

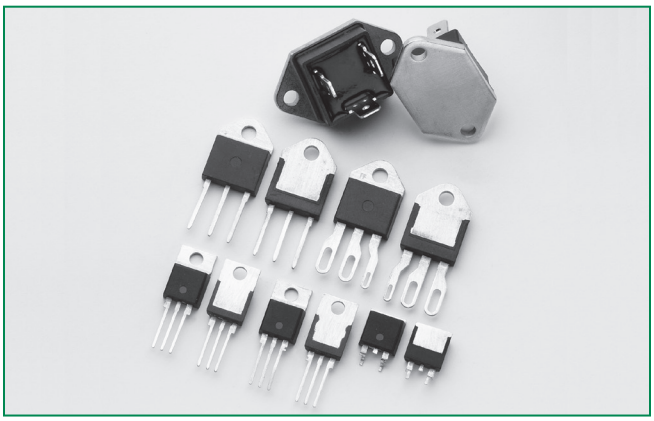

Agency Approval

Agency	Agency File Number
	TO-220L, TO-218K, TO-218J & Fastpak Packages: E71639

Main Features

Symbol	Value	Unit
$I_{T(RMS)}$	25	A
V_{DRM}/V_{RRM}	1000	V
I_{GT}	50 to 80	mA

Schematic Symbol

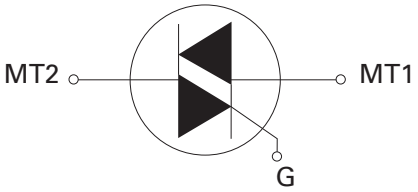

Description

25 Amp bi-directional solid state switch series is designed for AC switching and phase control applications such as motor speed and temperature modulation controls, lighting controls, and static switching relays.

Standard type devices normally operate in Quadrants I & III triggered from AC line.

Alternistor type devices only operate in quadrants I, II, & III and are used in circuits requiring high dv/dt capability.

Features & Benefits

- RoHS compliant
- Glass – passivated junctions
- Voltage capability up to 1000 V
- Surge capability up to 250 A

Applications

Excellent for AC switching and phase control applications such as heating, lighting, and motor speed controls.

Typical applications are AC solid-state switches, industrial power tools, exercise equipment, white goods and commercial appliances.

Alternistor Triacs (no snubber required) are used in applications with extremely inductive loads requiring highest commutation performance.

Internally constructed isolated packages are offered for ease of heat sinking with highest isolation voltage.

©2011 Littelfuse, Inc
Specifications are subject to change without notice.
Please refer to http://www.littelfuse.com for current information.

Absolute Maximum Ratings – Standard Triac

Symbol	Parameter	Test Conditions		Value	Unit
$I_{T(RMS)}$	RMS on-state current	Qxx25R5 Qxx25N5	T_C = 85°C	25	A
		Qxx25P5	T_C = 57°C		
I_{TSM}	Peak non-repetitive surge current	Qxx25R5 Qxx25N5	single half cycle; f = 50Hz; T_J (initial) = 25°C	167	A
			single half cycle; f = 60Hz; T_J (initial) = 25°C	200	
		Qxx25P5	single half cycle; f = 50Hz; T_J (initial) = 25°C	220	
			single half cycle; f = 60Hz; T_J (initial) = 25°C	250	
I^2t	I^2t Value for fusing	Qxx25R5 Qxx25N5	t_p = 8.3ms	166	A^2s
		Qxx25P5		260	
di/dt	Critical rate-of-rise of on-state current	f = 60Hz; T_J =125°C		100	A/µs
I_{GTM}	Peak gate current	T_J = 125°C		2	A
$P_{G(AV)}$	Average gate power dissipation	T_J = 125°C		0.5	W
T_{stg}	Storage temperature range			-40 to 125	°C
T_J	Operating junction temperature range	Qxx25R5 Qxx25N5		-40 to 125	°C
		Qxx25P5		-25 to 125	

Absolute Maximum Ratings – Alternistor Triac

Symbol	Parameter	Test Conditions		Value	Unit
$I_{T(RMS)}$	RMS on-state current	Qxx25LH5 Qxx25L6	T_C = 65°C	25	A
		Qxx25K6 Qxx25J6	T_C = 85°C		
		Qxx25RH5 Qxx25NH5 Qxx25R6 Qxx25NH6	T_C = 95°C		
I_{TSM}	Peak non-repetitive surge current	single half cycle; f = 50Hz; T_J (initial) = 25°C		208	A
		single half cycle; f = 60Hz; T_J (initial) = 25°C		250	
I^2t	I^2t Value for fusing	t_p = 8.3ms		260	A^2s
di/dt	Critical rate-of-rise of on-state current	f = 60Hz; T_J =125°C		100	A/µs
I_{GTM}	Peak gate current	T_J = 125°C		2	A
$P_{G(AV)}$	Average gate power dissipation	T_J = 125°C		0.5	W
T_{stg}	Storage temperature range			-40 to 125	°C
T_J	Operating junction temperature range			-40 to 125	°C

Note: xx = voltage

©2011 Littelfuse, Inc
Specifications are subject to change without notice.
Please refer to http://www.littelfuse.com for current information.

Electrical Characteristics (T_J = 25°C, unless otherwise specified) — Standard Triac

Symbol	Test Conditions	Quadrant		Value		Unit
				Qxx25R5 Qxx25N5	Qxx25P5	
I_{GT}	V_D = 12V; R_L = 60 Ω	I – II – III	MAX.	50		mA
		IV	TYP.	120		
V_{GT}		I – II – III	MAX.	1.3		V
		IV	TYP.	2.5		
V_{GD}	$V_D = V_{DRM}$; R_L = 3.3 kΩ ; T_J = 125°C	ALL	MIN.	0.2		V
I_H	I_T = 400mA (initial)		MAX.	100	50	mA
dv/dt	$V_D = V_{DRM}$; Gate Open; T_J = 125°C	400V	MIN.	275	—	V/µs
		600V		225	475	
		800V		200	400	
	$V_D = V_{DRM}$; Gate Open; T_J = 100°C	1000V		200	—	
(dv/dt)c	(di/dt)c = 13.3 A/ms; T_J = 125°C		MIN.	5		V/µs
t_{gt}	I_G = 2 x I_{GT}; PW = 15µs; I_T = 35.4 A		TYP.	4	3	µs

Electrical Characteristics (T_J = 25°C, unless otherwise specified) — Alternistor Triac

Symbol	Test Conditions	Quadrant		Value		Unit
				Qxx25RH5 Qxx25LH5 Qxx25NH5	Qxx25R6 Qxx25L6 Qxx25NH6 Qxx25K6 Qxx25J6	
I_{GT}	V_D = 12V; R_L = 60 Ω	I – II – III	MAX.	50	80	mA
V_{GT}		I – II – III	MAX.	1.3		V
V_{GD}	$V_D = V_{DRM}$; R_L = 3.3 kΩ ; T_J = 125°C	I – II – III	MIN.	0.2		V
I_H	I_T = 400mA (initial)		MAX.	50	100	mA
dv/dt	$V_D = V_{DRM}$; Gate Open; T_J = 125°C	400V	MIN.	575	600	V/µs
		600V		500	600	
		800V		400	475	
	$V_D = V_{DRM}$; Gate Open; T_J = 100°C	1000V		—	400	
(dv/dt)c	(di/dt)c = 13.3 A/ms; T_J = 125°C		MIN.	20	30	V/µs
t_{gt}	I_G = 2 x I_{GT}; PW = 15µs; I_T = 35.4 A		TYP.	3	5	µs

Static Characteristics

Symbol	Test Conditions				Value		Unit
					Qxx25R5 Qxx25N5 Qxx25xH5 Qxx25x6 Qxx25NH6	Qxx25P5	
V_{TM}	I_T = 35.4A; t_p = 380 µs			MAX.	1.8	1.4	V
I_{DRM} / I_{RRM}	V_{DRM} / V_{RRM}	T_J = 25°C	600 – 800V	MAX.	10	100	µA
			1000V		20	—	
		T_J = 100°C	600 – 800V		500	—	
			1000V		1000	—	
		T_J = 125°C	600 – 800V		2000	5000	

Note: xx = voltage, x = package

©2011 Littelfuse, Inc
Specifications are subject to change without notice.
Please refer to http://www.littelfuse.com for current information.

Thermal Resistances

Symbol	Parameter		Value	Unit
$R_{\theta(J-C)}$	Junction to case (AC)	Qxx25R5 / Qxx25N5 Qxx25R6 / Qxx25NH6 Qxx25RH5 / Qxx25NH5	0.89	°C/W
		Qxx25P5	1.6	
		Qxx25L6 / Qxx25LH5	2.0	
		Qxx25K6 / Qxx25J6	1.32	
$R_{\theta(J-A)}$	Junction to ambient	Qxx25Ry	45	°C/W
		Qxx25L6 / Qxx25LH5	50	

Note: xx = voltage, y = sensitivity

Figure 1: Normalized DC Gate Trigger Current vs. Junction Temperature

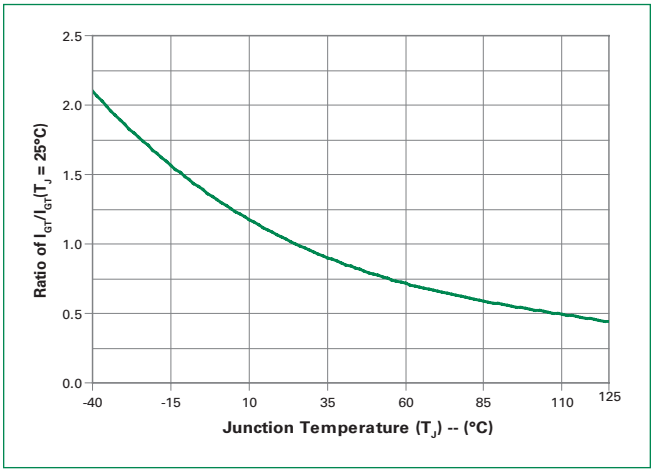

Figure 2: Normalized DC Gate Trigger Voltage vs. Junction Temperature

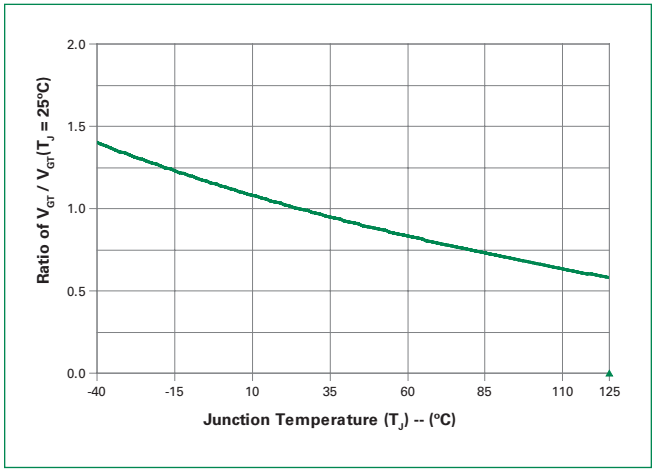

Figure 3: Normalized DC Holding Current vs. Junction Temperature

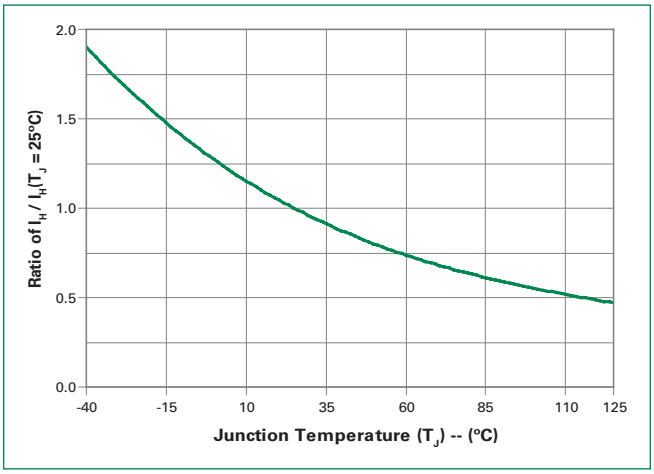

Figure 4: On-State Current vs. On-State Voltage (Typical)

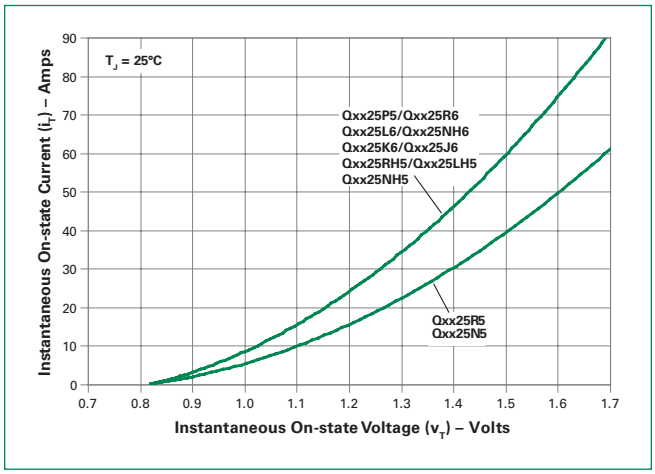

©2011 Littelfuse, Inc
Specifications are subject to change without notice.
Please refer to http://www.littelfuse.com for current information.

Figure 5: Power Dissipation (Typical) vs. RMS On-State Current

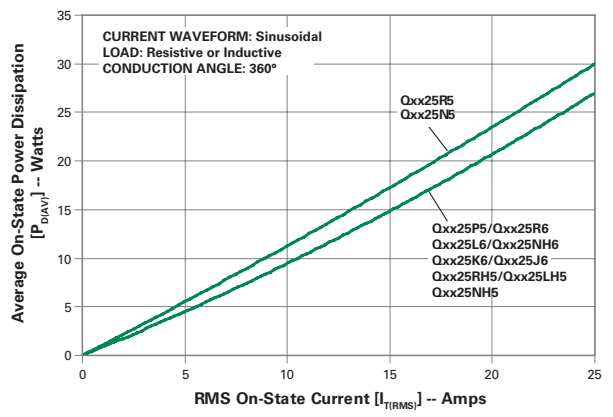

Figure 6: Maximum Allowable Case Temperature vs. RMS On-State Current

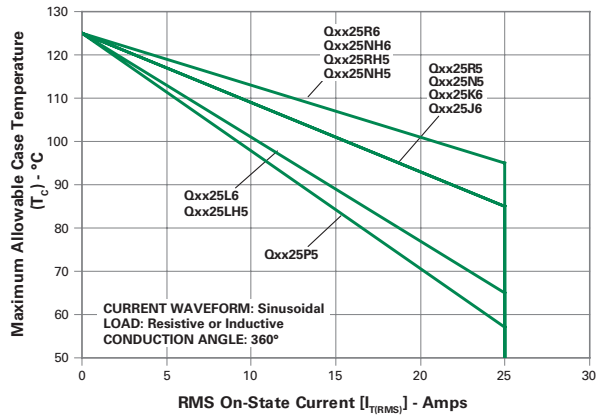

Figure 7: Maximum Allowable Ambient Temperature vs. RMS On-State Current (TO-220 packages only)

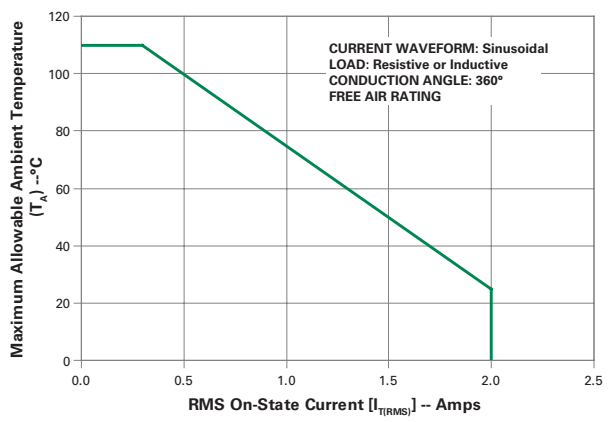

Figure 8: Surge Peak On-State Current vs. Number of Cycles

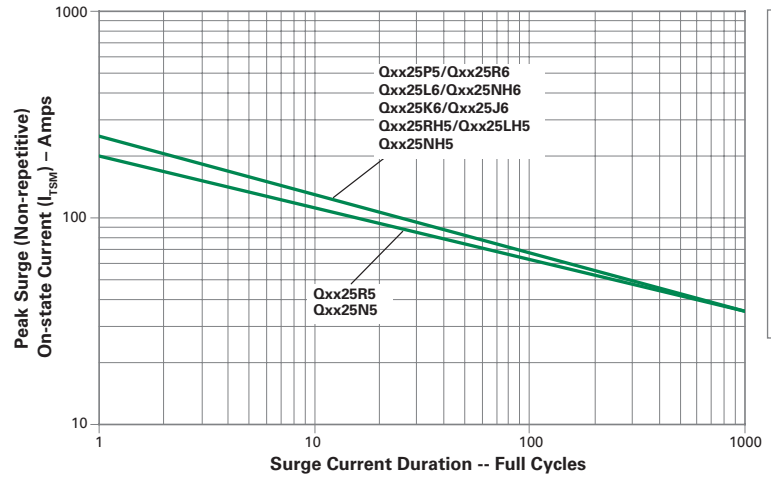

SUPPLY FREQUENCY: 60 Hz Sinusoidal
LOAD: Resistive
RMS On-State Current: [$I_{T(RMS)}$]: Maximum Rated Value at Specified Case Temperature

Notes:
1. Gate control may be lost during and immediately following surge current interval.
2. Overload may not be repeated until junction temperature has returned to steady-state rated value.

©2011 Littelfuse, Inc
Specifications are subject to change without notice.
Please refer to http://www.littelfuse.com for current information.

Soldering Parameters

Reflow Condition		Pb – Free assembly
Pre Heat	-Temperature Min ($T_{s(min)}$)	150°C
	-Temperature Max ($T_{s(max)}$)	200°C
	-Time (min to max) (t_s)	60 – 180 secs
Average ramp up rate (Liquidus Temp) (T_L) to peak		5°C/second max
$T_{S(max)}$ to T_L - Ramp-up Rate		5°C/second max
Reflow	-Temperature (T_L) (Liquidus)	217°C
	-Temperature (t_L)	60 – 150 seconds
Peak Temperature (T_P)		$260^{+0/-5}$ °C
Time within 5°C of actual peak Temperature (t_p)		20 – 40 seconds
Ramp-down Rate		5°C/second max
Time 25°C to peak Temperature (T_P)		8 minutes Max.
Do not exceed		280°C

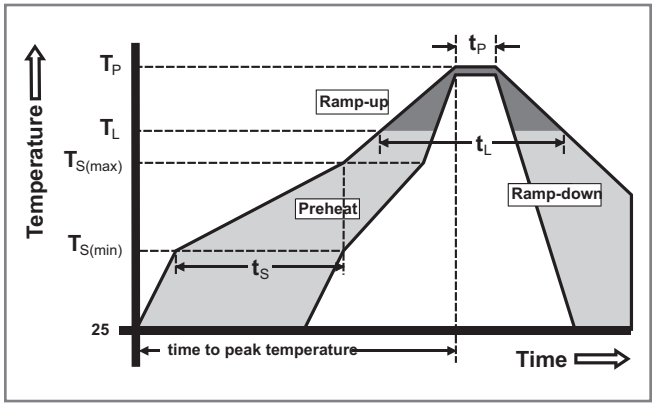

Physical Specifications

Terminal Finish	100% Matte Tin-plated
Body Material	UL recognized epoxy meeting flammability classification 94V-0
Lead Material	Copper Alloy

Design Considerations

Careful selection of the correct device for the application's operating parameters and environment will go a long way toward extending the operating life of the Thyristor. Good design practice should limit the maximum continuous current through the main terminals to 75% of the device rating. Other ways to ensure long life for a power discrete semiconductor are proper heat sinking and selection of voltage ratings for worst case conditions. Overheating, overvoltage (including dv/dt), and surge currents are the main killers of semiconductors. Correct mounting, soldering, and forming of the leads also help protect against component damage.

Environmental Specifications

Test	Specifications and Conditions
High Temperature Voltage Blocking	MIL-STD-750: Method 1040, Condition A Rated V_{RRM}, 125°C, 1008 hours
Temperature Cycling	MIL-STD-750: Method 1051 -40°C to 125°C, 15-minute dwell, 100 cycles
Biased Temp & Humidity	EIA/JEDEC: JESD22-A101 320VDC, 85°C, 85%RH, 1008 hours
High Temp. Storage	MIL-STD-750: Method 1031 150°C, 1008 hours
Low-Temp Storage	-40°C, 1008 hours
Thermal Shock	MIL-STD-750: Method 1056 0°C to 100°C, 5-minute dwell, 10-second transfer, 10 cycles
Autoclave (Pressure Cooker Test)	EIA/JEDEC: JESD22-A102 121°C, 100%RH, 2atm, 168 hours
Resistance to Solder Heat	MIL-STD-750: Method 2031 260°C, 10 seconds
Solderability	ANSI/J-STD-002, Category 3, Test A
Lead Bend	MIL-STD-750: Method 2036, Condition E

©2011 Littelfuse, Inc
Specifications are subject to change without notice.
Please refer to http://www.littelfuse.com for current information.

Dimensions — TO-220AB (R Package) — Non-isolated Mounting Tab

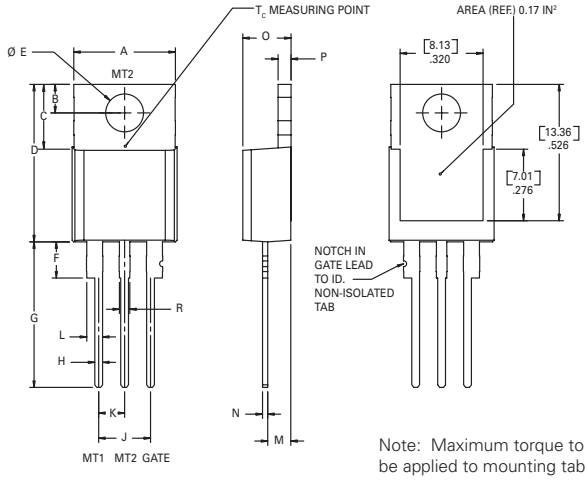

Note: Maximum torque to be applied to mounting tab is 8 in-lbs. (0.904 Nm).

Dimension	Inches		Millimeters	
	Min	Max	Min	Max
A	0.380	0.420	9.65	10.67
B	0.105	0.115	2.67	2.92
C	0.230	0.250	5.84	6.35
D	0.590	0.620	14.99	15.75
E	0.142	0.147	3.61	3.73
F	0.110	0.130	2.79	3.30
G	0.540	0.575	13.72	14.61
H	0.025	0.035	0.64	0.89
J	0.195	0.205	4.95	5.21
K	0.095	0.105	2.41	2.67
L	0.060	0.075	1.52	1.91
M	0.085	0.095	2.16	2.41
N	0.018	0.024	0.46	0.61
O	0.178	0.188	4.52	4.78
P	0.045	0.060	1.14	1.52
R	0.038	0.048	0.97	1.22

Dimensions — TO-220AB (L Package) — Isolated Mounting Tab

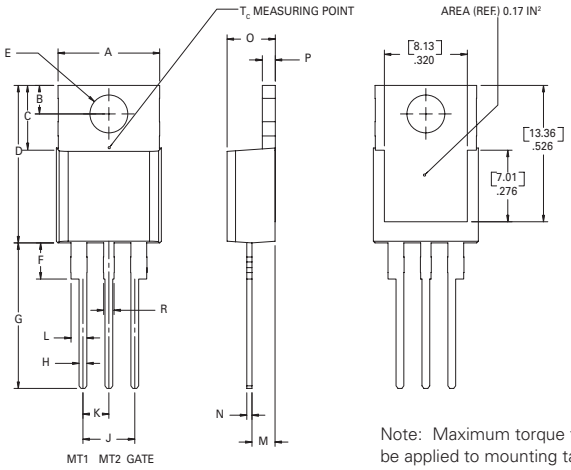

Note: Maximum torque to be applied to mounting tab is 8 in-lbs. (0.904 Nm).

Dimension	Inches		Millimeters	
	Min	Max	Min	Max
A	0.380	0.420	9.65	10.67
B	0.105	0.115	2.66	2.92
C	0.230	0.250	5.85	6.35
D	0.590	0.620	14.98	15.75
E	0.142	0.147	3.61	3.73
F	0.110	0.130	2.80	3.30
G	0.540	0.575	13.71	14.60
H	0.025	0.035	0.63	0.89
J	0.195	0.205	4.95	5.21
K	0.095	0.105	2.41	2.67
L	0.060	0.075	1.52	1.91
M	0.085	0.095	1.78	2.16
N	0.018	0.024	0.45	0.61
O	0.178	0.188	4.52	4.78
P	0.045	0.060	1.14	1.53
R	0.038	0.048	0.97	1.22

©2011 Littelfuse, Inc
Specifications are subject to change without notice.
Please refer to http://www.littelfuse.com for current information.

Dimensions — TO-263 (N Package) — D²Pak Surface Mount

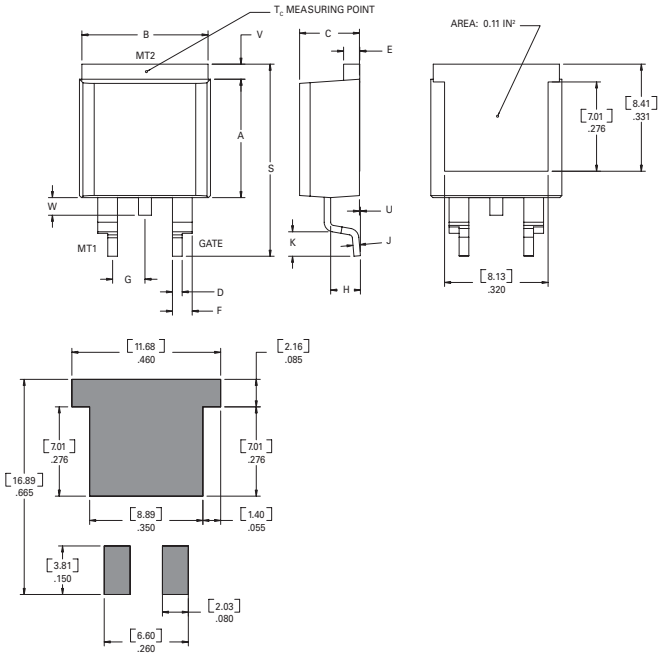

Dimension	Inches		Millimeters	
	Min	Max	Min	Max
A	0.360	0.370	9.14	9.40
B	0.380	0.420	9.65	10.67
C	0.178	0.188	4.52	4.78
D	0.025	0.035	0.64	0.89
E	0.045	0.060	1.14	1.52
F	0.060	0.075	1.52	1.91
G	0.095	0.105	2.41	2.67
H	0.092	0.102	2.34	2.59
J	0.018	0.024	0.46	0.61
K	0.090	0.110	2.29	2.79
S	0.590	0.625	14.99	15.88
V	0.035	0.045	0.89	1.14
U	0.002	0.010	0.05	0.25
W	0.040	0.070	1.02	1.78

Dimensions — TO-218AC (K Package) — Isolated Mounting Tab

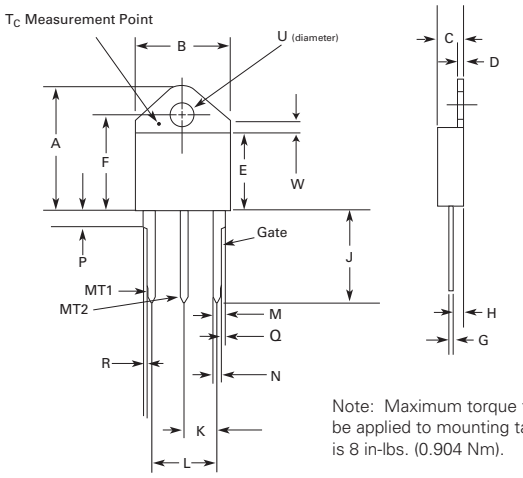

Note: Maximum torque to be applied to mounting tab is 8 in-lbs. (0.904 Nm).

Dimension	Inches		Millimeters	
	Min	Max	Min	Max
A	0.810	0.835	20.57	21.21
B	0.610	0.630	15.49	16.00
C	0.178	0.188	4.52	4.78
D	0.055	0.070	1.40	1.78
E	0.487	0.497	12.37	12.62
F	0.635	0.655	16.13	16.64
G	0.022	0.029	0.56	0.74
H	0.075	0.095	1.91	2.41
J	0.575	0.625	14.61	15.88
K	0.211	0.219	5.36	5.56
L	0.422	0.437	10.72	11.10
M	0.058	0.068	1.47	1.73
N	0.045	0.055	1.14	1.40
P	0.095	0.115	2.41	2.92
Q	0.008	0.016	0.20	0.41
R	0.008	0.016	0.20	0.41
U	0.164	0.165	4.10	4.20
W	0.085	0.095	2.17	2.42

©2011 Littelfuse, Inc
Specifications are subject to change without notice.
Please refer to http://www.littelfuse.com for current information.

Dimensions — TO-218X (J Package) — Isolated Mounting Tab

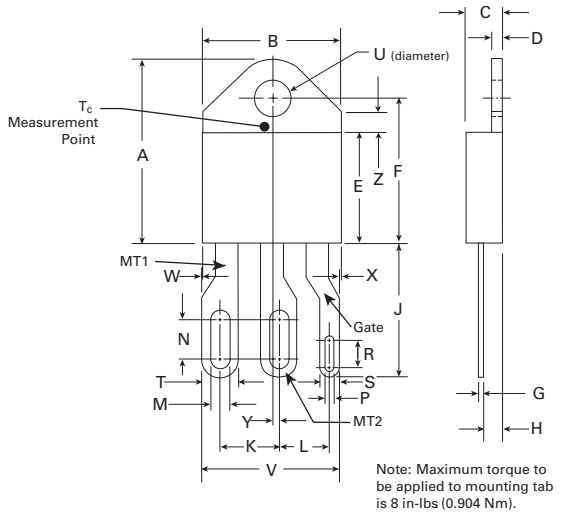

Dimension	Inches		Millimeters	
	Min	Max	Min	Max
A	0.810	0.835	20.57	21.21
B	0.610	0.630	15.49	16.00
C	0.178	0.188	4.52	4.78
D	0.055	0.070	1.40	1.78
E	0.487	0.497	12.37	12.62
F	0.635	0.655	16.13	16.64
G	0.022	0.029	0.56	0.74
H	0.075	0.095	1.91	2.41
J	0.575	0.625	14.61	15.88
K	0.256	0.264	6.50	6.71
L	0.220	0.228	5.58	5.79
M	0.080	0.088	2.03	2.24
N	0.169	0.177	4.29	4.49
P	0.034	0.042	0.86	1.07
R	0.113	0.121	2.87	3.07
S	0.086	0.096	2.18	2.44
T	0.156	0.166	3.96	4.22
U	0.164	0.165	0.410	0.420
V	0.603	0.618	15.31	15.70
W	0.000	0.005	0.00	0.13
X	0.003	0.012	0.07	0.30
Y	0.028	0.032	0.71	0.81
Z	0.085	0.095	2.17	2.42

Dimensions — TO-3 (P Package) Fastpak — Isolated Mounting Tab

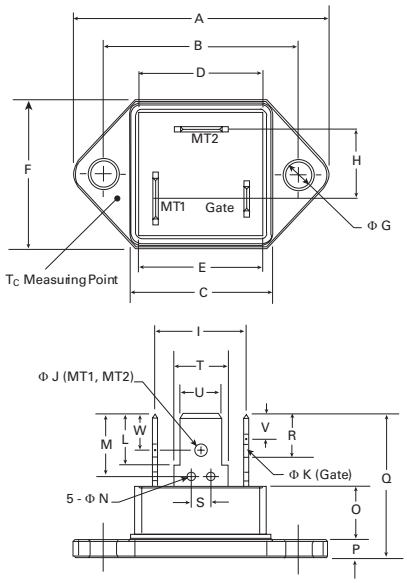

Thickness off all three copper-alloy terminals is .032" (0.81 mm).

Dimension	Inches		Millimeters	
	Min	Max	Min	Max
A	1.531	1.543	38.90	39.20
B	1.177	1.185	29.90	30.10
C	0.843	0.850	21.40	21.60
D	0.780	0.795	19.80	20.20
E	0.783	0.791	19.90	20.10
F	0.874	0.906	22.20	23.00
G	0.161	0.169	4.10	4.30
H	0.386	0.465	9.80	11.80
I	0.508	0.587	12.90	14.90
J	0.079	0.087	2.00	2.20
K	0.047	0.055	1.20	1.40
L	0.307	0.319	7.80	8.10
M	0.372	0.396	9.45	10.05
N	0.043	0.059	1.10	1.50
O	0.315	0.331	8.00	8.40
P	0.098	0.106	2.50	2.70
Q	0.846	0.886	21.50	22.50
R	0.244	0.256	6.20	6.50
S	0.106	0.130	2.70	3.30
T (MT1)	0.321	0.329	8.15	8.35
T (MT2)	0.321	0.329	8.15	8.35
T (Gate)	0.220	0.228	5.60	5.80
U (MT1)	0.246	0.254	6.25	6.45
U (MT2)	0.246	0.254	6.25	6.45
U (Gate)	0.183	0.191	4.65	4.85
V	0.120	0.130	3.05	3.30
W	0.175	0.185	4.45	4.70

Maximum torque to be applied to mounting tab is 8 in-lbs (0.904Nm).

©2011 Littelfuse, Inc
Specifications are subject to change without notice.
Please refer to http://www.littelfuse.com for current information.

Product Selector

Part Number	Voltage				Gate Sensitivity Quadrants		Package
	400V	600V	800V	1000V	I - II - III	IV	
Qxx25R5	X	X	X	X	50 mA	120 mA (TYP)	TO-220R
Qxx25N5	X	X	X	X	50 mA	120 mA (TYP)	TO-263 D^2-Pak
Qxx25P5		X	X		50 mA	120 mA (TYP)	Fastpak
Qxx25RH5	X	X	X		50 mA		TO-220R
Qxx25LH5	X	X	X		50 mA		TO-220L
Qxx25NH5	X	X	X		50 mA		TO-263 D^2-Pak
Qxx25R6	X	X	X	X	80 mA		TO-220R
Qxx25L6	X	X	X	X	80 mA		TO-220L
Qxx25NH6	X	X	X	X	80 mA		TO-263 D^2-Pak
Qxx25J6	X	X	X		80 mA		TO-218X
Qxx25K6	X	X	X	X	80 mA		TO-218AC

Packing Options

Part Number	Marking	Weight	Packing Mode	Base Quantity
Qxx25R5	Qxx25R5	2.20g	Bulk	500
Qxx25R5TP	Qxx25R5	2.20g	Tube	500 (50 per tube)
Qxx25N5TP	Qxx25N5	1.60g	Tube	500 (50 per tube)
Qxx25N5RP	Qxx25N5	1.60g	Embossed Carrier	500
Qxx25RH5	Qxx25RH5	2.20g	Bulk	500
Qxx25RH5TP	Qxx25RH5	2.20g	Tube	500 (50 per tube)
Qxx25LH5	Qxx25LH5	2.20g	Bulk	500
Qxx25LH5TP	Qxx25LH5	2.20g	Tube	500 (50 per tube)
Qxx25NH5TP	Qxx25NH5	1.60g	Tube	500 (50 per tube)
Qxx25NH5RP	Qxx25NH5	1.60g	Embossed Carrier	500
Qxx25P5	Qxx25P5	21.4g	Bulk	200
Qxx25R6	Qxx25R6	2.20g	Bulk	500
Qxx25R6TP	Qxx25R6	2.20g	Tube	500 (50 per tube)
Qxx25L6	Qxx25L6	2.20g	Bulk	500
Qxx25L6TP	Qxx25L6	2.20g	Tube	500 (50 per tube)
Qxx25NH6TP	Qxx25NH6	1.60g	Tube	500 (50 per tube)
Qxx25NH6RP	Qxx25NH6	1.60g	Embossed Carrier	500
Qxx25J6TP	Qxx25J6	5.23g	Tube	250 (25 per tube)
Qxx25K6TP	Qxx25K6	4.40g	Tube	250 (25 per tube)

©2011 Littelfuse, Inc
Specifications are subject to change without notice.
Please refer to http://www.littelfuse.com for current information.

TO-263 Embossed Carrier Reel Pack (RP) Specifications

Meets all EIA-481-2 Standards

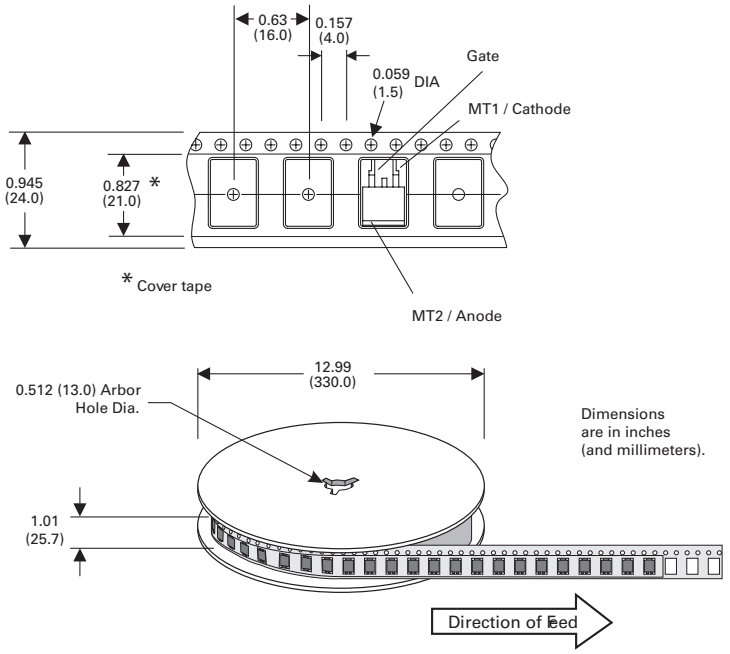

Part Numbering System

Q 60 25 N H6

DEVICE TYPE
Q: Triac or Alternistor

VOLTAGE RATING
40: 400V
60: 600V
80: 800V
K0: 1000V

CURRENT RATING
25: 25A

SENSITIVITY
Standard Triac
5: 50mA
Alternistor
H5: 50mA
6: 80mA
H6: 80mA

PACKAGE TYPE
L : TO-220AB Isolated
R : TO-220AB Non-Isolated
N : TO-263 (D^2 -Pak)
K : TO-218AC Isolated
J : TO-218X Isolated
P : Fastpak

Part Marking System

TO-220 AB – (R Package)
TO-263 AB – (N Package)

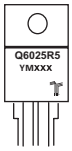

TO-220 AB – (L Package)

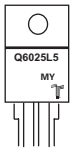

TO-218AC (K Package)
TO-218X (J Package)

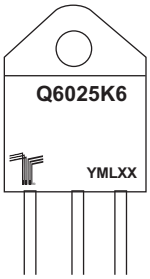

Fastpak (P Package)

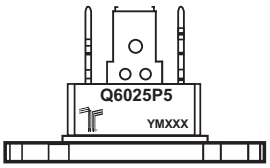

©2011 Littelfuse, Inc
Specifications are subject to change without notice.
Please refer to http://www.littelfuse.com for current information.

Компания «ЭлектроПласт» предлагает заключение долгосрочных отношений при поставках импортных электронных компонентов на взаимовыгодных условиях!

Наши преимущества:

- Оперативные поставки широкого спектра электронных компонентов отечественного и импортного производства напрямую от производителей и с крупнейших мировых складов;
- Поставка более 17-ти миллионов наименований электронных компонентов;
- Поставка сложных, дефицитных, либо снятых с производства позиций;
- Оперативные сроки поставки под заказ (от 5 рабочих дней);
- Экспресс доставка в любую точку России;
- Техническая поддержка проекта, помощь в подборе аналогов, поставка прототипов;
- Система менеджмента качества сертифицирована по Международному стандарту ISO 9001;
- Лицензия ФСБ на осуществление работ с использованием сведений, составляющих государственную тайну;
- Поставка специализированных компонентов (Xilinx, Altera, Analog Devices, Intersil, Interpoint, Microsemi, Aeroflex, Peregrine, Syfer, Eurofarad, Texas Instrument, Miteq, Cobham, E2V, MA-COM, Hittite, Mini-Circuits,General Dynamics и др.);

Помимо этого, одним из направлений компании «ЭлектроПласт» является направление «Источники питания». Мы предлагаем Вам помощь Конструкторского отдела:

- Подбор оптимального решения, техническое обоснование при выборе компонента;
- Подбор аналогов;
- Консультации по применению компонента;
- Поставка образцов и прототипов;
- Техническая поддержка проекта;
- Защита от снятия компонента с производства.

Как с нами связаться

Телефон: 8 (812) 309 58 32 (многоканальный)
Факс: 8 (812) 320-02-42
Электронная почта: org@eplast1.ru
Адрес: 198099, г. Санкт-Петербург, ул. Калинина, дом 2, корпус 4, литера А.