The product information in this catalog is for reference only. Please request the Engineering Drawing for the most current and accurate design information.
All non-RoHS products have been discontinued, or will be discontinued soon. Please check the products status on the Hirose website RoHS search at www.hirose-connectors.com, or contact your Hirose sales representative.

DXM (1.27MM PITCH) SERIES HIGH-DENSITY I/O CONNECTOR

General

DXM series high-density I/O connectors with bellow contacts are perfect for tomorrow's miniaturized electronic devices. This new 1.27mm (0.050") interconnect design ensures positive locking, effortless coupling, terminal protection and EMI reduction in a miniaturized and rugged package. DXM series offer you one of the most varied and complete lines of High-Density connectors in the world, i.e. IDC and Solder for the plug and right angle dip, straight dip, IDC and SMT for the receptacle. Available in 14, 20, 26, 36, 50, 68, 80, 100 and 110 way.

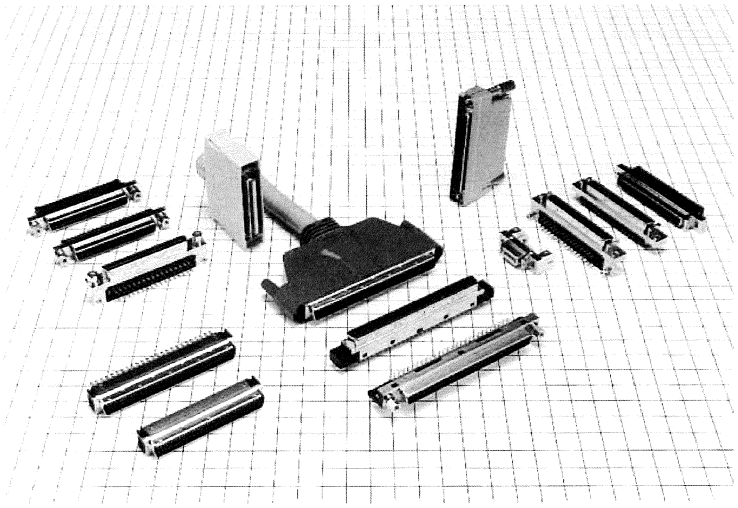

Features

1. 1.27mm (0.050") contact spacing conserves valuable board space and permits ultra-high density designs.
2. Bellow contacts create smooth and precise mating and unmating.
3. Unique shell design assures first make/last break grounding and overall noise protection.
4. IDC termination allows quick and low cost termination to AWG #28 wires.
5. Backshell and receptacle shell are made of die-cast zinc alloy or stainless steel to reduce the penetration of external EMI noise.
6. Ferrite added to DX Right Angle Dip Type for EMI Protection is available.
7. Overmold backshell provided for ESD protection is available in 'One-Touch' locking and 'Screw' locking.
8. Termination methods are available in IDC, Soldering, Right Angle Dip, Straight Dip and SMT.

Application

Office Autmation, Computers, Measurement, Communication and Control Equipment, Factory Automation, Home Automation and other commercial applications needing high density interconnections.

Specifications

Items	Standard value
Current capacity	0.5A
Rated voltage	AC125V
Insulation resistance	250M Ω or more at DC100V
Contact resistance	35m Ω or less at DC100mA
Withstanding voltage	AC 300Vr.m.s. for 1 minute

The product information in this catalog is for reference only. Please request the Engineering Drawing for the most current and accurate design information.
All non-RoHS products have been discontinued, or will be discontinued soon. Please check the products status on the Hirose website RoHS search at www.hirose-connectors.com, or contact your Hirose sales representative.

DXM Series Variations

●One-touch lock type (14, 20, 26, 36, 50, 68 pins)

Plug cover

1.1 Over mold cover type

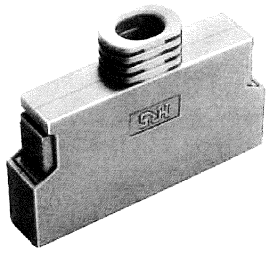

Plug

2.1 IDC type

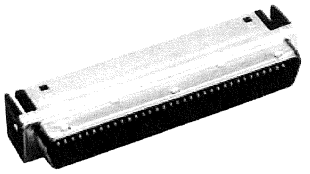

Receptacle

3.1 Right angle dip
Board screw on type

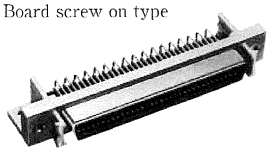

3.2 Right angle dip
Board lock pin harpoon type

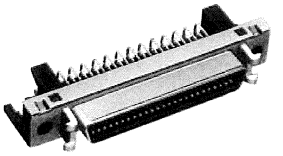

3.3 Right angle dip
Board lock pin round type
(round type)

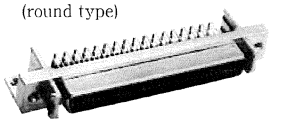

5.1 Straight dip type

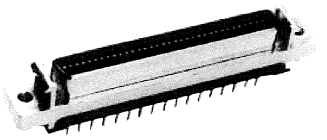

6.1 IDC type
(68 pins)

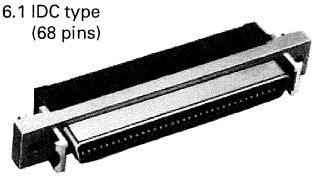

The product information in this catalog is for reference only. Please request the Engineering Drawing for the most current and accurate design information.
All non-RoHS products have been discontinued, or will be discontinued soon. Please check the products status on the Hirose website RoHS search at www.hirose-connectors.com, or contact your Hirose sales representative.

●Screw lock type (68, 80, 100, 110 pins)

Overmold cover type (100, 110 pins)

Plug cover

7.1 Over mold cover type

Plug

2.1 IDC type

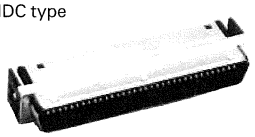

13.1 Straight dip (110 pins)

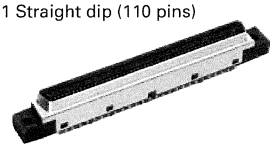

Receptacle

8.2 Right angle dip
Board lock pin harpoon type

9.1 Right angle dip
Ferrite core type
(100 pins)

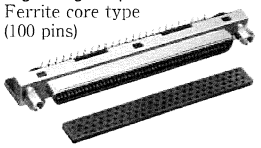

Die cast cover (68, 80, 100 pins)

Plug cover

7.2 Die cast cover type

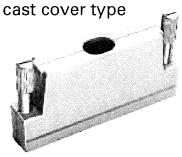

Plug

2.1 IDC type

Receptacle

8.1 Right angle dip
Board screw on type

8.3 Right angle dip
Board lock pin round type
(round type)

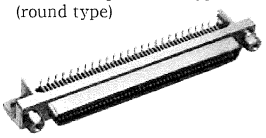

Note: There is no interchangeability between the locks of the die cast cover type and overmold type.

11.1 Straight dip type

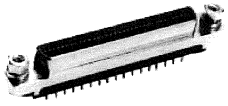

12.1 IDC type
(68 pins)

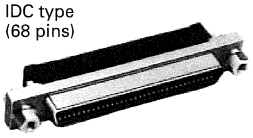

The product information in this catalog is for reference only. Please request the Engineering Drawing for the most current and accurate design information.
All non-RoHS products have been discontinued, or will be discontinued soon. Please check the products status on the Hirose website RoHS search at www.hirose-connectors.com, or contact your Hirose sales representative.

1. One Touch Lock Plug Cover

Ordering Information

DX30M — 50 — CV

(1) (2) (3)

1) Series number: DX30M
2) No. of pins: 14, 20, 26, 36, 50, 68
3) Cover case type
   CV: Over mold cover case

Material Treatment

Item	Material	Remarks
Overmold cover case	Synthetic resin, Stainless	Light beige

1.1 Overmold Cover

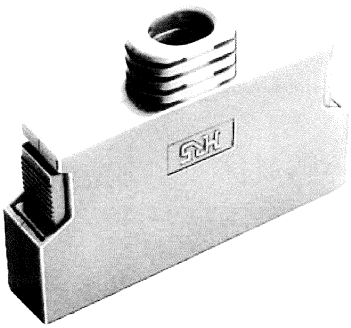

DX30M-68-CV (10)

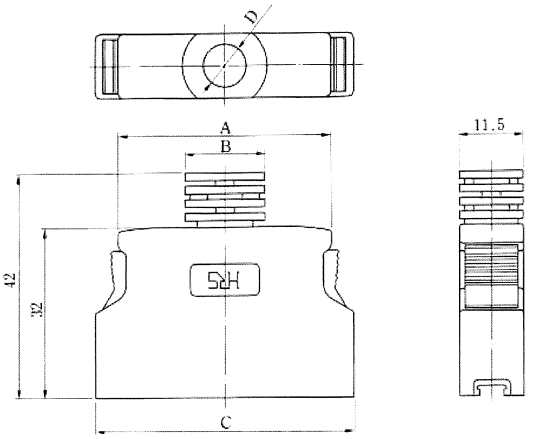

Unit: mm

HRS No.	No.of pin	Parts No.	A	B	C	D	Applicable plug unit IDC type		RoHS
CL230-5051-7-10	14	DX30M-14-CV (10)	17.09	11.50	25.79	ø6.3	DX30AM-14P		YES
CL230-5052-0-10	20	DX30M-20-CV (10)	20.90	14.50	29.60	ø6.7	DX30AM-20P		
CL230-5053-2-10	26	DX30M-26-CV (10)	24.80	15.00	33.50	ø7.0	DX30AM-26P		
CL230-5054-5-10	36	DX30M-36-CV (10)	31.06	15.75	39.80	ø8.1	DX30AM-36P		
CL230-5055-8-10	50	DX30M-50-CV (10)	39.95	16.00	48.70	ø8.7	DX30AM-50P		
CL230-5056-0-10	68	DX30M-68-CV (10)	51.38	17.57	60.13	8.7 × 10.27	DX30AM-68P		

General List of Engagement Combinations

Cover case and plug unit	Receptacle		
	Right angle type	Straight type	IDC type
DX30M-14-CV (10) + DX30AM-14P	DX10M-14S (E), DX10GM-14SE	DX20M-14S	—
DX30M-20-CV (10) + DX30AM-20P	DX10M-20S (E), DX10GM-20SE	DX20M-20S	—
DX30M-26-CV (10) + DX30AM-26P	DX10M-26S (E), DX10GM-26SE	DX20M-26S	—
DX30M-36-CV (10) + DX30AM-36P	DX10M-36S (E), DX10GM-36SE	DX20M-36S	DX33AM-36S
DX30M-50-CV (10) + DX30AM-50P	DX10M-50S (E), DX10GM-50SE	DX20M-50S	DX33AM-50S
DX30M-68-CV (10) + DX30AM-68P	DX10M-68S (E), DX10GM-68SE	DX20M-68S	DX33AM-68S

The product information in this catalog is for reference only. Please request the Engineering Drawing for the most current and accurate design information.
All non-RoHS products have been discontinued, or will be discontinued soon. Please check the products status on the Hirose website RoHS search at www.hirose-connectors.com, or contact your Hirose sales representative.

2. Plug Unit (Interchangeable One Touch-Screw Lock Type)

Ordering Information

DX30 A M — 50 P

(1) (2) (3) (1) (4) (5)

1) Series No.: DX--M
2) Wiring style 30: Discrete cable IDC (for fine wire use)
3) Applicable wire A: AWG#28 (Discrete cable press-fit type)
4) No. of pins: 14, 20, 26, 36, 50, 68, 80, 100, 110
5) Mating type P: Plug

Material Treatment

Item	Material	Remarks
Shell	Steel	Nickel plating
Insulator	PBT	Black (UL94V-0)
Male terminal	Copper alloy	Selective gold plating

Applicable

	Interface cable	
	Discrete cable fine wire type	
Conductor size	AGW#28	
Conductor composition	7/0.127	
o.d. of insulator	0.58	0.62
Cable style	UL20276 and UL2789	UL2990

2.1 Discrete Cable IDC Type (for Fine Wire)

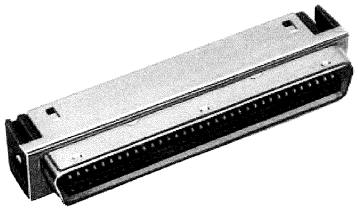

DX30AM-68P

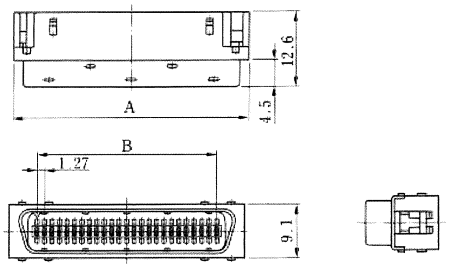

Unit: mm

HRS No.	No. of pin	Parts No.	A	B	Applicable cover case		RoHS
					One touch lock type	Screw lock type	
CL230-5024-4	14	DX30AM-14P	17.09	7.62	DX30M-14-CV (10)	—	YES
CL230-5025-7	20	DX30AM-20P	20.90	11.43	DX30M-20-CV (10)	—	
CL230-5026-0	26	DX30AM-26P	24.71	15.24	DX30M-26-CV (10)	—	
CL230-5027-2	36	DX30AM-36P	31.06	21.59	DX30M-36-CV (10)	—	
CL230-5028-5	50	DX30AM-50P	39.95	30.48	DX30M-50-CV (10)	—	
CL230-5029-8	68	DX30AM-68P	51.38	41.96	DX30M-68-CV (10)	DX30M-68-CV2	
CL230-5030-7	80	DX30AM-80P	59.00	49.53	—	DX30M-80-CV2	
CL230-5031-0	100	DX30AM-100P	71.70	62.23	—	DX30M-100-CV1・2	
CL230-5064-9	110	DX30AM-110P	78.05	68.58	—	DX30M-110-CV1	

The product information in this catalog is for reference only. Please request the Engineering Drawing for the most current and accurate design information.
All non-RoHS products have been discontinued, or will be discontinued soon. Please check the products status on the Hirose website RoHS search at www.hirose-connectors.com, or contact your Hirose sales representative.

3. One Touch Lock, Receptacle Right Angle Type

Ordering Information

DX	10	※	M	–	50	S	E	(50)
(1)	(2)	(3)	(1)		(4)	(5)	(6)	(7)

1) Series No.: DX--M
2) Wiring style 10: Right angle type
3) Lock style (one touch lock type)
   Blank : (Receptacle case material: zinc alloy die cast)
   G : (Receptacle case material: steel)
4) No. of pins: 14, 20, 26, 36, 50, 68
5) Mating type S: Receptacle
6) Board-fitting type
   Blank : Screw on type
   E : Lock pin type
7) Individual specifications
   (50) :Dip portion gold plated

Material Treatment

Item	Material	Remarks
Receptacle case	Zinc alloy die cast or steel	Nickel plating
Shell	Steel	Nickel plating
Insulators	PBT	Black (UL94V-0)
Female terminal	Copper alloy	Selective gold plating

3.1 Board Screw on Type

DX10GM-68S (50)

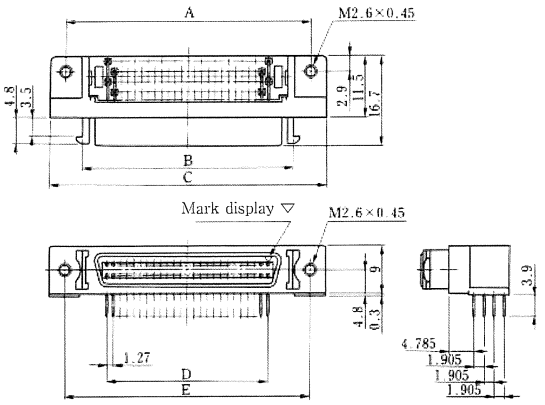

Unit: mm

HRS No.	No.of pin	Parts No.	A	B	C	D	E	RoHS
CL230-5223-0-50	14	DX10G1M-14S (50)	23.64	17.14	29.54	7.62	23.64	YES
CL230-5177-5-50	20	DX10GM-20S (50)	27.45	20.95	33.35	11.43	27.45	
CL230-5225-6-50	26	DX10G1M-26S (50)	31.26	24.76	37.16	15.24	31.26	
CL230-5226-9-50	36	DX10G1M-36S (50)	37.61	31.11	43.51	21.59	37.61	
CL230-5227-1-50	50	DX10G1M-50S (50)	46.50	40.00	52.40	30.48	46.50	
CL230-5181-2-50	68	DX10GM-68S (50)	57.93	51.43	63.83	41.91	57.93	

3.2 Board Lock Pin Harpoon Type

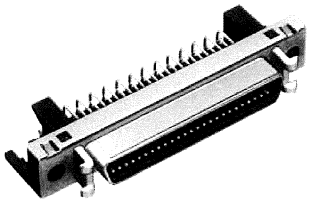

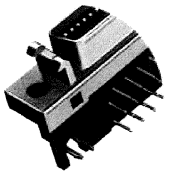

DX10G1M-50SE (50)

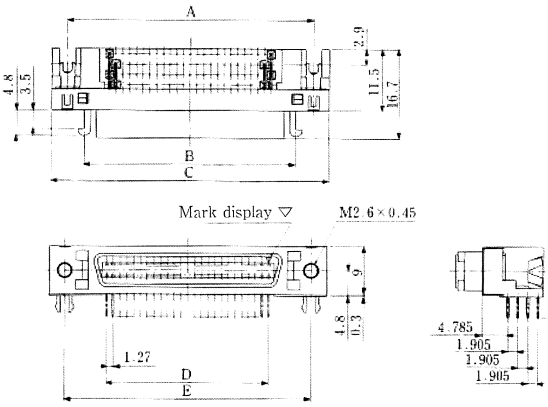

Unit: mm

HRS No.	No.of pin	Parts No.	A	B	C	D	E	RoHS
CL230-5210-0-50	14	DX10G1M-14SE (50)	23.64	17.14	29.54	7.62	23.64	YES
CL230-5130-1-50	20	DX10GM-20SE (50)	27.45	20.95	33.35	11.43	27.45	
CL230-5212-4-50	26	DX10G1M-26SE (50)	31.26	24.76	37.16	15.24	31.26	
CL230-5213-7-50	36	DX10G1M-36SE (50)	37.61	31.11	43.51	21.59	37.61	
CL230-5214-0-50	50	DX10G1M-50SE (50)	46.50	40.00	52.40	30.48	46.50	
CL230-5134-2-50	68	DX10GM-68SE (50)	57.93	51.43	63.83	41.91	57.93	

3.3 Board Lock Pin Round Type

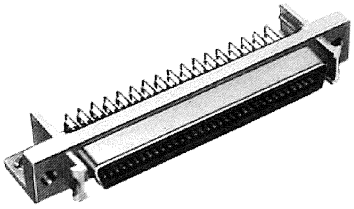

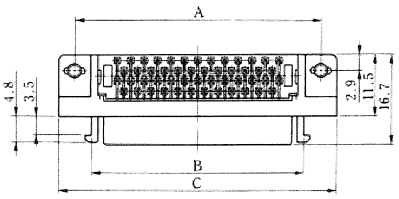

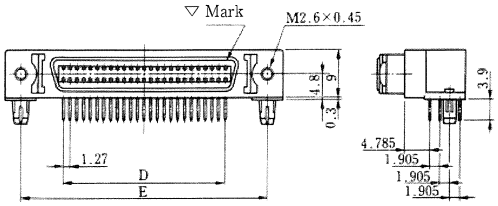

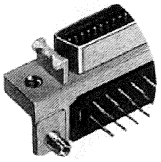

DX10M-68SE (50)

Unit: mm

HRS No.	No.of pin	Parts No.	A	B	C	D	E	RoHS
CL230-5107-0-50		DX10M-14SE (50)	23.64	17.14		7.62		YES
CL230-5067-7-50	20	DX10M-20SE (50)	27.45	20.95	33.35	11.43	27.45	
CL230-5068-0-50		DX10M-26SE (50)	31.26	24.76	37.16	15.24	31.26	
CL230-5069-2-50	36	DX10M-36SE (50)	37.61	31.11	43.51	21.59	37.61	
CL230-5070-1-50	50	DX10M-50SE (50)	46.50	40.00	52.40	30.48	46.50	
CL230-5071-4-50	68	DX10M-68SE (50)	57.93	51.43	63.83	41.91	57.93	

PCB Layout (Recommended board thickness:1.6mm)

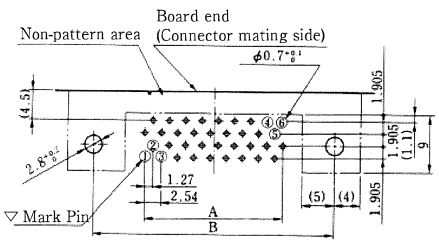

(20, 36, 68 pins)

① Contact No.1
② Contact No.2
③ Contact No.3
④ Contact No.(N-2)
⑤ Contact No.(N-1)
⑥ Contact No.(N)
※N: Numbers of Pin

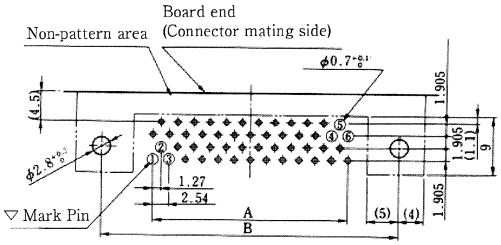

(14, 26, 50 pins)

① Contact No.1
② Contact No.2
③ Contact No.3
④ Contact No.(N-2)
⑤ Contact No.(N-1)
⑥ Contact No.(N)
※N: Numbers of Pin

Unit: mm

No. of pin	A	B
14	7.62	23.64
20	11.43	27.45
26	15.24	31.26
36	21.59	37.61
50	30.48	46.50
68	41.91	57.93

Panel-Fitting Dimensional Drawing (Recommended panel thickness:max. 1.6mm)

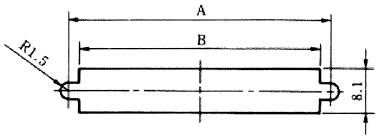

Unit: mm

No. of pin	A	B
14	23.64	19.99
20	27.45	23.80
26	31.26	27.60
36	37.61	33.90
50	46.50	42.80
68	57.93	54.23

The product information in this catalog is for reference only. Please request the Engineering Drawing for the most current and accurate design information.
All non-RoHS products have been discontinued, or will be discontinued soon. Please check the products status on the Hirose website RoHS search at www.hirose-connectors.com, or contact your Hirose sales representative.

5. One Touch Lock, Receptacle Straight Type

Ordering Information

DX 20 ※ M — 50 S (50)

(1) (2) (3) (1) (4) (5) (6)

1) Series number: DX-M
2) Wiring style
   20: Straight dip
3) Lock style
   Blank: One Touch Lock Type
4) Number of positions: 14, 20, 26, 36, 50, 68
5) Type of aperture
   S: Receptacle connector
6) Individual specifications
   (50): Dip portion gold plated

Material Treatment

Item	Material	Remarks
Receptacle case	Zinc alloy die cast	Nickel plating
Shell	Steel	Nickel plating
Insulators	PBT resin	Black (UL94V-0)
Female terminal	Copper alloy	Selective gold plating

5.1 Receptacle Straight Type

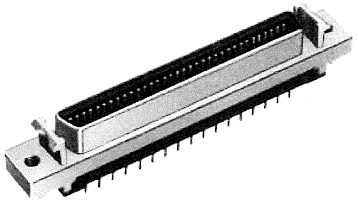

DX20M-68S (50)

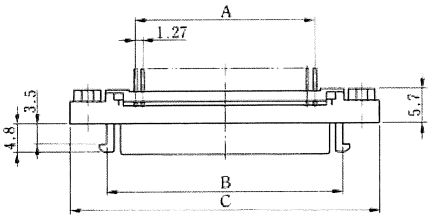

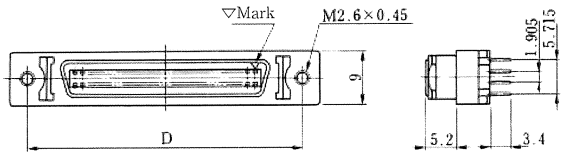

■ Connector mounting condition

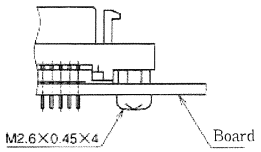

Note: Fasten the printed circuit board with screws using a tightening torque of 0.3 to 0.4 N.m.

Unit: mm

HRS No.	No.of pin	Parts No.	A	B	C	D	RoHS
CL230-5012-5-50	14	DX20M-14S (50)	7.62	17.14	29.54	23.64	YES
CL230-5013-8-50	20	DX20M-20S (50)	11.43	20.95	33.35	27.45	
CL230-5014-0-50	26	DX20M-26S (50)	15.24	24.76	37.16	31.26	
CL230-5015-3-50	36	DX20M-36S (50)	21.59	31.11	43.51	37.61	
CL230-5016-6-50	50	DX20M-50S (50)	30.48	40.00	52.40	46.50	
CL230-5017-9-50	68	DX20M-68S (50)	41.91	51.43	63.83	57.93	

PCB Layout
(Recommended board thickness:1.6mm)

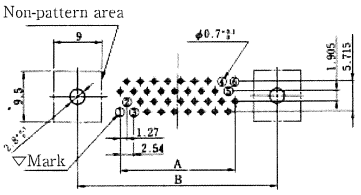

(20, 36, 68 pins)

① Contact No.1
② Contact No.2
③ Contact No.3
④ Contact No.(N-2)
⑤ Contact No.(N-1)
⑥ Contact No.(N)
※N: Numbers of Pin

Unit: mm

No. of pin	A	B
20	11.43	27.45
36	21.59	37.61
68	41.91	57.93

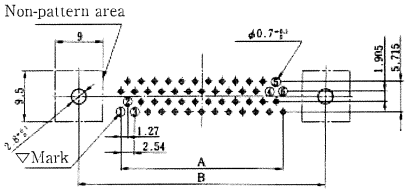

(14, 26, 50 pins)

① Contact No.1
② Contact No.2
③ Contact No.3
④ Contact No.(N-2)
⑤ Contact No.(N-1)
⑥ Contact No.(N)
※N: Numbers of Pin

Unit: mm

No. of pin	A	B
14	37.61	33.90
26	46.50	42.80
68	57.93	54.23

Panel-Fitting Dimensional Drawing
(Recommended panel thickness:max. 1.6mm)

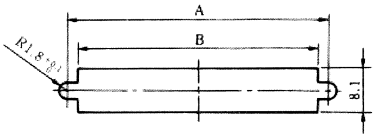

Unit: mm

No. of pin	A	B
14	23.64	19.99
20	27.45	23.8
26	31.26	27.6
36	37.61	33.9
50	46.50	42.8
68	57.93	54.23

The product information in this catalog is for reference only. Please request the Engineering Drawing for the most current and accurate design information.
All non-RoHS products have been discontinued, or will be discontinued soon. Please check the products status on the Hirose website RoHS search at www.hirose-connectors.com, or contact your Hirose sales representative.

6. One Touch Lock Receptacle Flat Ribbon Cable Type

Ordering Information

DX 33 A M — 68 S (50)

(1) (2) (3) (1) (4) (5) (6)

1) Series No.: DX--M
2) Connector style
   33: Flat IDC type
   (for ribbon cable use)
3) Applicable cable
   A: AWG#28
4) No. of pins 36, 50, 68
5) Mating type
   S: Receptacle
6) Individual specifications
   (50):Dip portion gold plated

Material Treatment

Item	Material	Remarks
Receptacle case	Zinc alloy die cast	Nickel plating
Shell	Steel	Nickel plating
Insulators	PBT resin	Black (UL94V-0)
Female terminal	Copper alloy	Selective gold plating

6.1 Receptacle, Flat Ribbon Cable Type

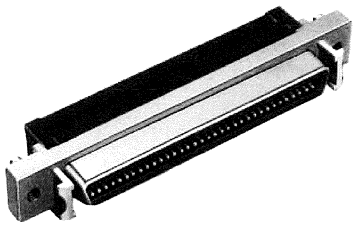

DX33AM-68S (50)

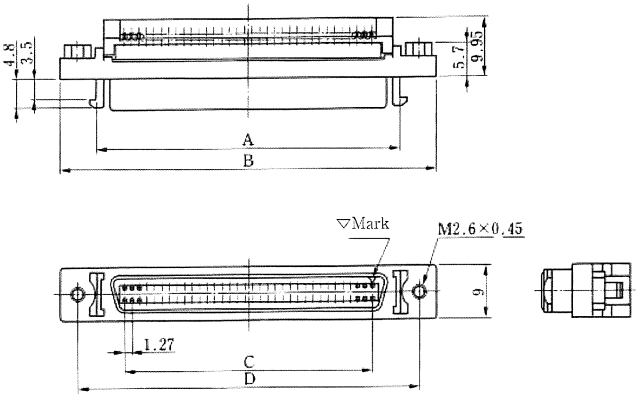

Unit: mm

HRS No.	No. of pin	Parts No.	A	B	C	D	RoHS
CL230-5095-2-50	36	DX33AM-36S (50)	31.11	43.51	21.59	37.61	YES
CL230-5092-4-50	50	DX33AM-50S (50)	40.00	52.40	30.48	46.50	
CL230-5062-3-50	68	DX33AM-68S (50)	51.43	63.83	41.91	57.93	

Panel-Fitting Dimensional Drawing (Recommended panel thickness:max. 1.6mm)

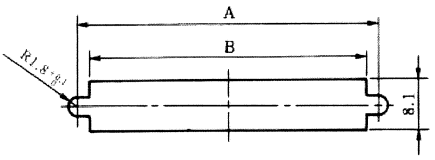

Unit: mm

No. of pin	A	B
36	37.61	33.90
50	46.50	42.80
68	57.93	54.23

The product information in this catalog is for reference only. Please request the Engineering Drawing for the most current and accurate design information.
All non-RoHS products have been discontinued, or will be discontinued soon. Please check the products status on the Hirose website RoHS search at www.hirose-connectors.com, or contact your Hirose sales representative.

7. Screw Lock Type, Plug Cover

Ordering Information

DX30M — 110 — CV1

(1) (2) (3)

1) Series No.: DX30M
2) No. of pins: 68, 80, 100, 110
3) Cover case type
   CV1: Overmold cover case
   CV2: Die cast cover

Material Treatment

Item	Material	Remarks
Overmold cover	Stainless steel, Synthetic resin	Dark grey
Die cast cover	Zinc alloy die cast	Silver coated

1.1 Overmold Cover

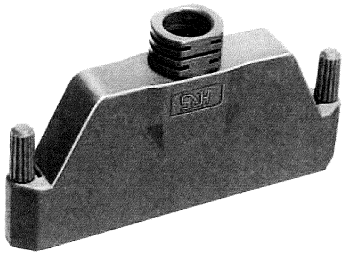

DX30M-100-CV1

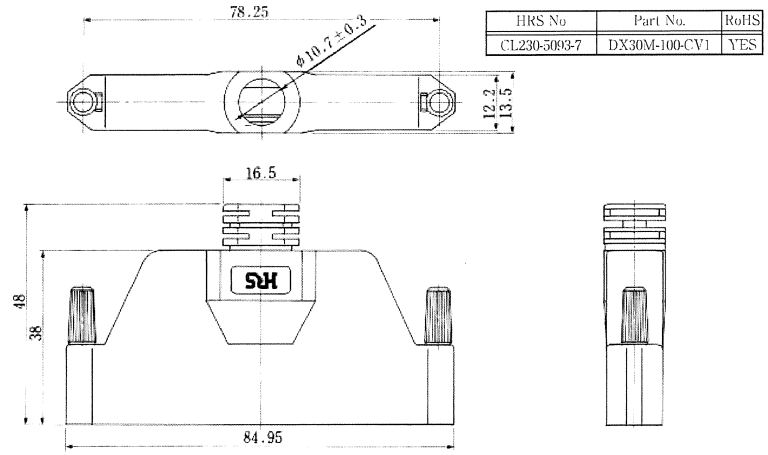

HRS No	Part No.	RoHS
CL230-5093-7	DX30M-100-CV1	YES

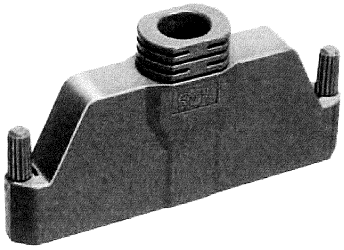

DX30M-110-CV1

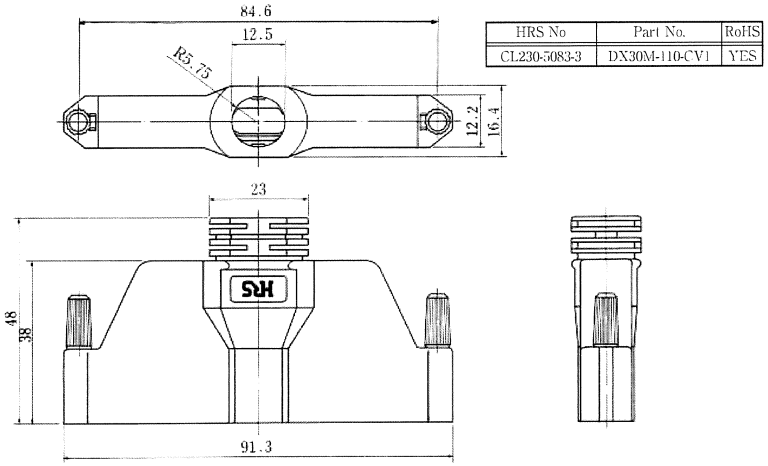

HRS No	Part No.	RoHS
CL230-5083-3	DX30M-110-CV1	YES

List of Engagement Combinations

Cover case and plug unit	Receptacle	
	Right angle type	Ferrite core type
DX30M-100-CV1 + DX30AM-100P	DX10AM-100SE2 (50), DX10AM-100SE1 (50)	DX10AMF-100SE1 (50)
DX30M-110-CV1 + DX30AM-110P	DX10AM-110SE2 (50), DX10AM-110SE1 (50)	—

The product information in this catalog is for reference only. Please request the Engineering Drawing for the most current and accurate design information.
All non-RoHS products have been discontinued, or will be discontinued soon. Please check the products status on the Hirose website RoHS search at www.hirose-connectors.com, or contact your Hirose sales representative.

7.2 Die Cast Cover

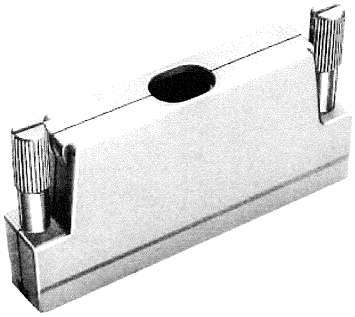

DX30M-68-CV2

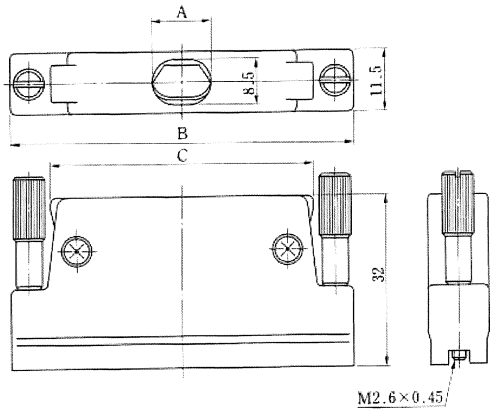

Unit: mm

HRS No.	No. of pin	Parts No.	A	B	C	Applicable plug unit IDC type	RoHS
CL230-5059-9	68	DX30M-68-CV2	11.00	64.93	49.68	DX30AM-68P	YES
CL230-5060-8	80	DX30M-80-CV2	12.50	72.55	57.30	DX30AM-80P	
CL230-5061-0	100	DX30M-100-CV2	14.00	85.25	70.00	DX30AM-100P	

List of Engagement Combinations

Cover case and plug unit	Receptacle		
	Right angle type	Straight DIP type	Ribbon cable type
DX30M-68-CV2 + DX30AM-68P	DX10BM-68S (50), DX10BM-68SE (50)	DX20BM-68S (50)	DX33AM-68S-LNA (50)
DX30M-80-CV2 + DX30AM-80P	DX10BM-80S (50), DX10BM-80SE (50)	DX20BM-80S (50)	—
DX30M-100-CV2 + DX30AM-100P	DX10BM-100S (50), DX10BM-100SE (50)	DX20BM-100S (50)	—

The product information in this catalog is for reference only. Please request the Engineering Drawing for the most current and accurate design information.
All non-RoHS products have been discontinued, or will be discontinued soon. Please check the products status on the Hirose website RoHS search at www.hirose-connectors.com, or contact your Hirose sales representative.

8. Screw Lock, Receptacle Right Angle Type

Ordering Information

DX	10	B	M	—	68	S	E	(50)
(1)	(2)	(3)	(1)		(4)	(5)	(6)	(7)

1) Series No.: DX--M
2) Connector style 10: Right angle type
3) Lock style (Screw lock type)
   A: Receptacle case material — Steel
   B: Receptacle case material — Zinc alloy die cast
4) No. of pins: 68, 80, 100, 110
5) Mating type S: Receptacle
6) Board fitting type
   Blank : Screw on type
   E : Lock pin round type
   E1 : Lock pin harpoon type (Board thickness 1.6mm)
   E2 : Lock pin harpoon type (Board thickness 1.2mm)
7) Individual specifications
   (50) :Dip portion gold plated

Material Treatment

Item	Material	Remarks
Receptacle case	Zinc alloy die cast or steel	Nickel plating
Shell	Steel	Nickel plating
Insulators	PBT resin	Black (UL94V-0)
Female terminal	Copper alloy	Selective gold plating

8.1 Board Screw on Type

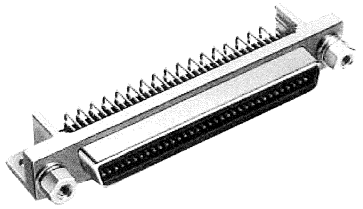

DX10BM-68S (50)

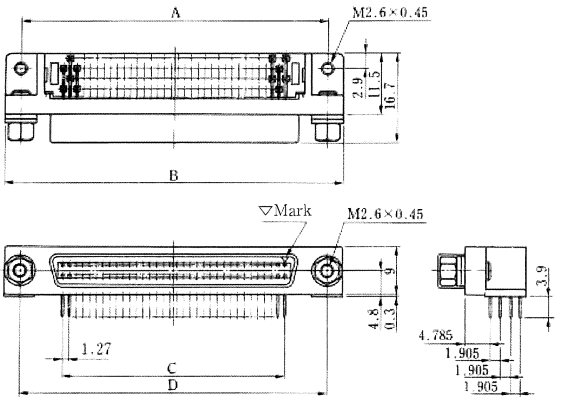

Unit: mm

HRS No.	No.of pin	Parts No.	A	B	C	D	RoHS
CL230-5008-8-50	68	DX10BM-68S (50)	57.93	63.83	41.91	57.93	YES
CL230-5009-0-50	80	DX10BM-80S (50)	65.55	71.45	49.53	65.55	
CL230-5010-0-50	100	DX10BM-100S (50)	78.25	84.15	62.23	78.25	

8.2 Board Lock Pin Harpoon Type

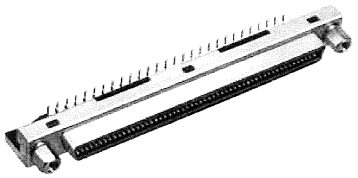

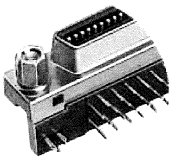

DX10AM-110SE2 (50)

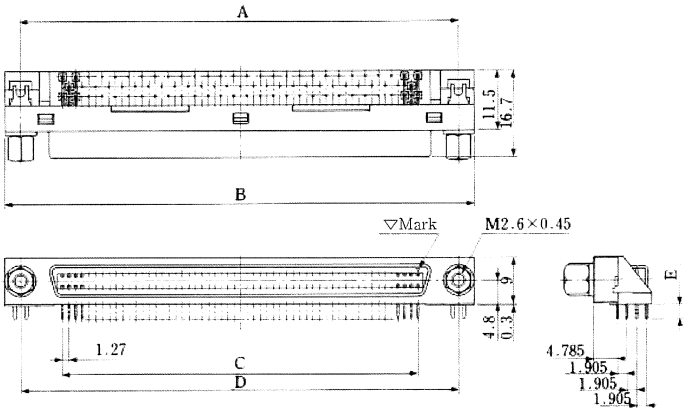

Unit: mm

HRS No.	No.of pin	Parts No.	A	B	C	D	E	RoHS
CL230-5137-0-50	100	DX10AM-100SE2 (50)	78.25	84.15	62.23	78.25	2.7	YES
CL230-5089-0-50	100	DX10AM-100SE1 (50)	78.25	84.15	62.23	78.25	3.4	
CL230-5138-3-50	110	DX10AM-110SE2 (50)	84.60	90.50	68.58	84.60	2.7	
CL230-5088-7-50	110	DX10AM-110SE1 (50)	84.60	90.50	68.58	84.60	3.4	

The product information in this catalog is for reference only. Please request the Engineering Drawing for the most current and accurate design information.
All non-RoHS products have been discontinued, or will be discontinued soon. Please check the products status on the Hirose website RoHS search at www.hirose-connectors.com, or contact your Hirose sales representative.

8.3 Board Lock Pin, Round Type

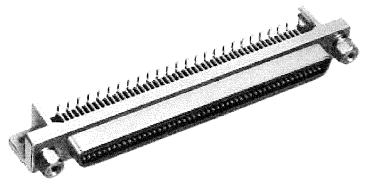

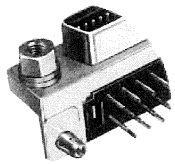

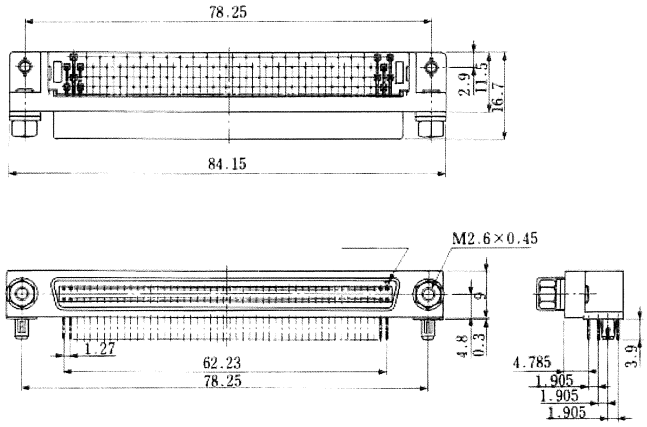

DX10BM-100SE (50)

HRS No.	Part No.	RoHS
CL230-5076-8-50	DX10BM-100SE (50)	YES

PCB Layout (Recommended Board Thickness:1.2mm, 1.6mm)

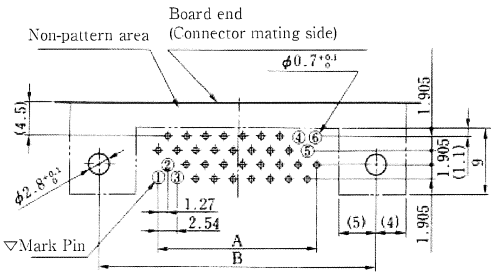

(68, 80, 100 pins)

① Contact No.1
② Contact No.2
③ Contact No.3
④ Contact No.(N-2)
⑤ Contact No.(N-1)
⑥ Contact No.(N)
※N: Numbers of Pin

Unit: mm

No. of pin	A	B
68	41.91	57.93
80	49.53	65.55
100	62.23	78.25

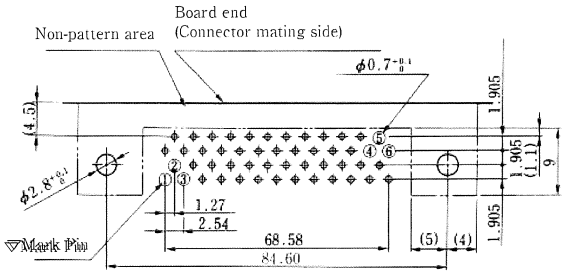

(110 pins)

① Contact No.1
② Contact No.2
③ Contact No.3
④ Contact No.(N-2)
⑤ Contact No.(N-1)
⑥ Contact No.(N)
※N: Numbers of Pin

Panel-Fitting Dimensional Drawing

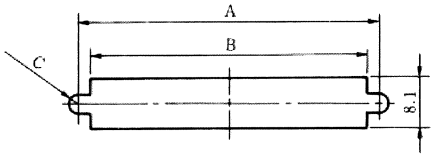

●DX10BM

Panel thickness	No. of washers
0~t0.4	2
t0.8~1.2	1
t1.6~2	No washer

●DX10AM

Panel thickness
t0.8~1.2

Unit: mm

No. of Pin	A	B	C	Remarks
68	57.93	54.23	R1.85	DX10BM-68S (50)
80	65.55	61.85	R1.85	DX10BM-80S (50)
100	78.25	74.55	R1.85	DX10BM-100SE (50)
100	78.25	74.55	R1.5	DX10AM-100SE2 (50) DX10BM-100SE1 (50)
110	84.5	80.8	R1.5	DX10AM-110SE2 (50) DX10AM-110SE1 (50)

The product information in this catalog is for reference only. Please request the Engineering Drawing for the most current and accurate design information.
All non-RoHS products have been discontinued, or will be discontinued soon. Please check the products status on the Hirose website RoHS search at www.hirose-connectors.com, or contact your Hirose sales representative.

9. Screw Lock, Receptacle Ferrite Core Type

Ordering Information

DX	10	A	M	F	—	100	S	E1	(50)
(1)	(2)	(3)	(1)	(4)		(5)	(6)	(7)	(8)

1) Series No.: DX--M
2) Connector style
   10: Right angle type
3) Lock style (Screw lock type)
   A: Receptacle case material-steel
4) Board mounting style
   F: Ferrite core type
5) No. of pins: 100
6) Mating type
   S: Receptacle
7) Board fitting type
   E1: Lock pin type (Board thickness 1.6mm)
8) Individual specifications
   (50): Dip portion gold plated

Material Treatment

Item	Material	Remarks
Receptacle case	Steel	Nickel plating
Insulator	PBT resin	Black (UL94V-0)
Female terminal	Copper alloy	Selective gold plating
Ferrite core	—	—

9.1 Right Angle Ferrite Core Type

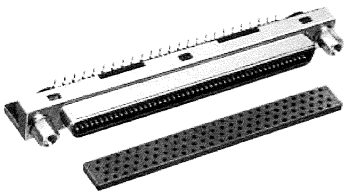

DX10AMF-100SE1(50)

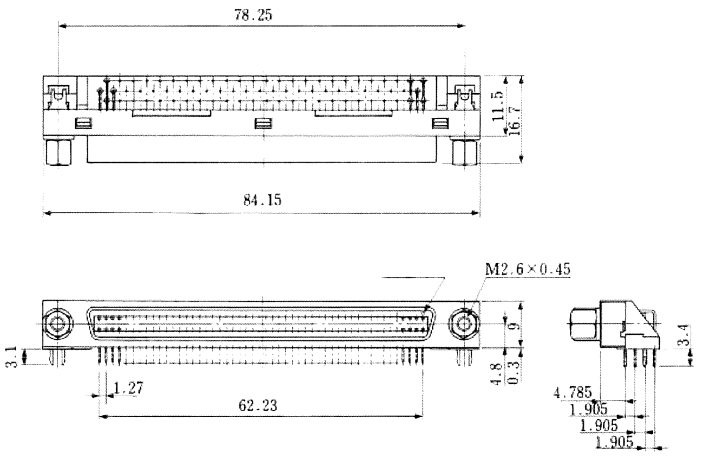

HRS No	Part No.	RoHS
CL230-5127-7-50	DX10AMF-100SE1(50)	YES

PCB Layout
(Recommended Board Thickness:1.6mm)

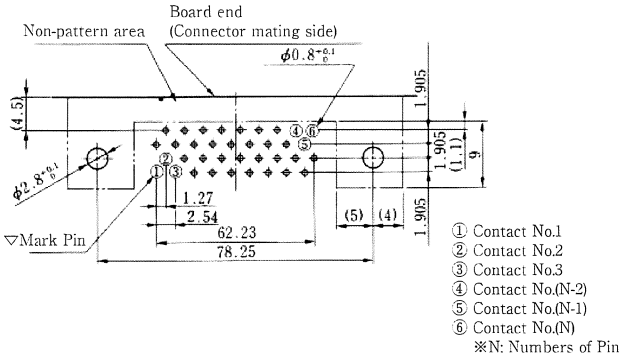

Panel-Fitting Dimensional Drawing

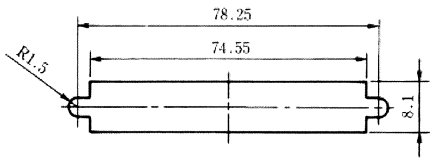

●DX10AMF

Panel thickness
t0.8~1.2

The product information in this catalog is for reference only. Please request the Engineering Drawing for the most current and accurate design information.
All non-RoHS products have been discontinued, or will be discontinued soon. Please check the products status on the Hirose website RoHS search at www.hirose-connectors.com, or contact your Hirose sales representative.

11. Screw Lock Receptacle Straight Type

Ordering Information

DX 20 B M — 80 S (50)

(1) (2) (3) (1) (4) (5) (6)

1) Series No.: DX--M
2) Connector style
   20: Straight dip
3) Lock style
   B: Screw lock type
4) No. of pins: 68, 80, 100
5) Mating type
   S: Receptacle
6) Individual specifications
   (50): Dip portion gold plated

Material Treatment

Item	Material	Remarks
Receptacle case	Zinc alloy die cast	Nickel plating
Shell	Steel	Nickel plating
Insulator	PBT resin	Black (UL94V-0)
Female terminal	Copper alloy	Selective gold plating

11.1 Receptacle Straight Type

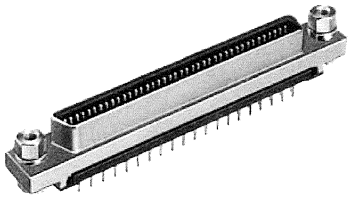

DX20BM-80S (50)

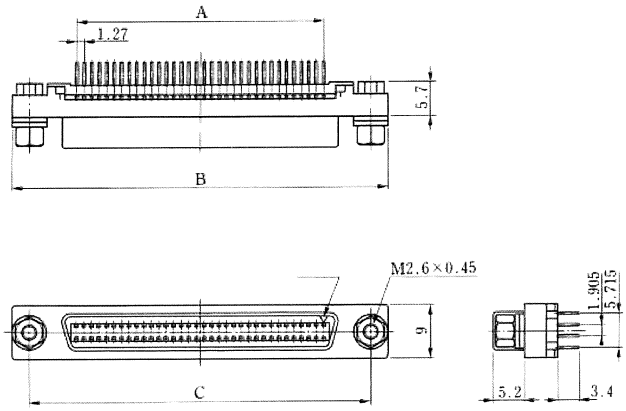

Unit: mm

HRS No.	No. of pin	Parts No.	A	B	C	RoHS
CL230-5020-3-50	68	DX20BM-68S (50)	41.91	63.83	57.93	YES
CL230-5021-6-50	80	DX20BM-80S (50)	49.53	71.45	65.55	
CL230-5022-9-50	100	DX20BM-100S (50)	62.23	84.15	78.25	

PCB Layout
(Recommended Board Thickness:1.6mm)

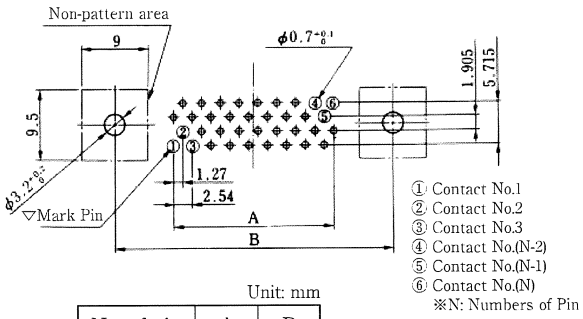

Unit: mm

No. of pin	A	B
68	41.91	57.93
80	49.53	65.55
100	62.23	78.25

Panel-Fitting Dimensional Drawing

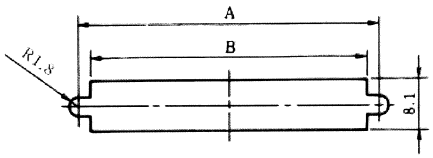

●DX20BM

Panel thickness	No. of washers
0~t0.4	2
t0.8~1.2	1
t1.6~2	No washer

Unit: mm

No. of pin	A	B
68	57.93	54.23
80	65.55	61.85
100	78.25	74.55

The product information in this catalog is for reference only. Please request the Engineering Drawing for the most current and accurate design information.
All non-RoHS products have been discontinued, or will be discontinued soon. Please check the products status on the Hirose website RoHS search at www.hirose-connectors.com, or contact your Hirose sales representative.

12. Screw Lock Receptacle, Flat Ribbon Cable Type

Ordering Information

DX 33 A M — 68 S LNA (50)

(1) (2) (3) (1) (4) (5) (6) (7)

1) Series No.: DX--M
2) Connector style
   33: Flat IDC type (for ribbon cable)
3) Applicable wire
   A: AWG#28
4) No. of pins: 68
5) Mating type
   S: Receptacle
6) Board fitting type
   LNA: Screw lock type
7) Individual specifications
   (50) :Dip portion gold plated

Material Treatment

Item	Material	Remarks
Receptacle case	Zinc alloy die cast	Nickel plating
Shell	Steel	Nickel plating
Insulator	PBT resin	Black (UL94V-0)
Female terminal	Copper alloy	Selective gold plating

12.1 Receptacle, Flat Ribbon Cable Type

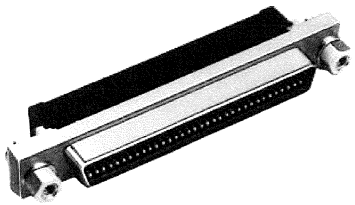

DX33AM-68S-LNA (50)

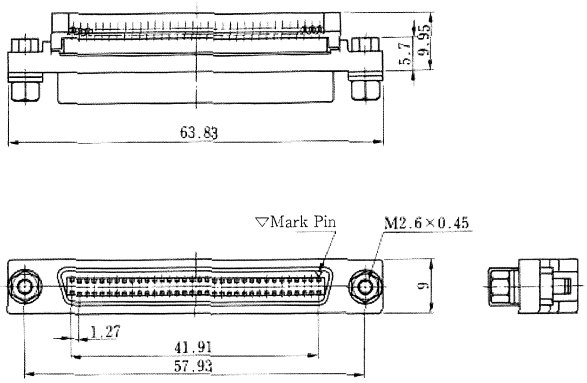

HRS No.	Part No.	RoHS
CL230-5078-3-50	DX33AM-68S-LNA (50)	YES

Panel-Fitting Dimensional Drawing

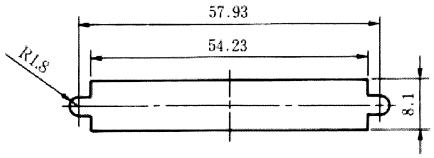

●DX33AM

Panel thickness	No. of washers
0~t0.4	2
t0.8~1.2	1
t1.6~2	No washer

The product information in this catalog is for reference only. Please request the Engineering Drawing for the most current and accurate design information.
All non-RoHS products have been discontinued, or will be discontinued soon. Please check the products status on the Hirose website RoHS search at www.hirose-connectors.com, or contact your Hirose sales representative.

13. Plug Straight Type

Ordering Information

DX 20E M — 110 P

(1) (2) (1) (3) (4)

1) Series No.: DX--M
2) Connector style
   20E: Straight dip
3) No. of pins: 110
4) Mating type
   P: Plug

Material Treatment

Item	Material	Remarks
Shell	Steel	Nickel plating
Insulator	PBT resin	Black (UL94V-0)
Male contact	Copper alloy	Selective gold plating

13.1 Plug Straight Type

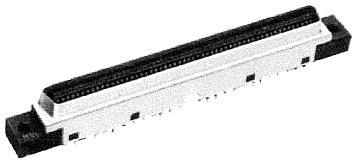

DX20EM-110P

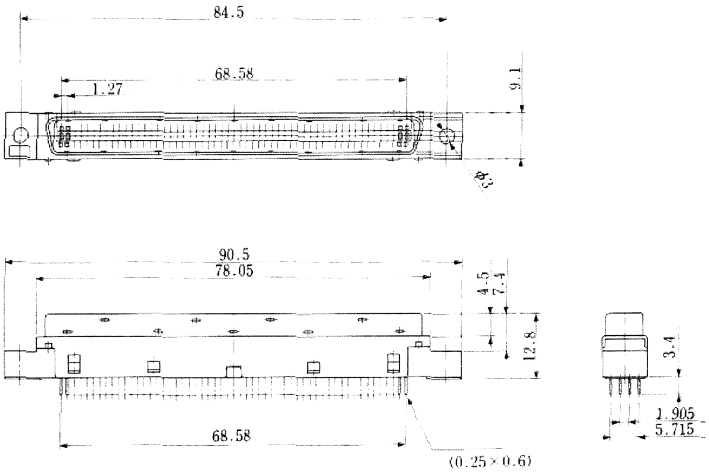

HRS No.	Part No.	RoHS
CL230-5094-0	DX20EM-110P	YES

PCB Layout
(Recommended Board Thickness:1.5mm)

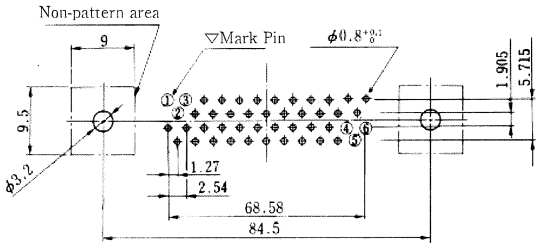

Diagram of Mounting Conditions for DX20EM

Note: Secure the connectors and boards of this product to the panel.

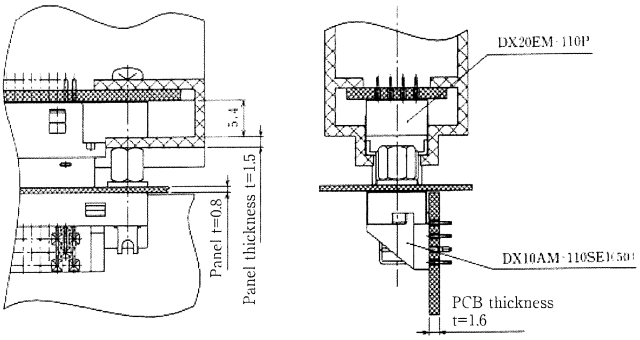

Panel-Fitting Dimensional Drawing
(Recommended Panel Thickness:Max.1.5mm)

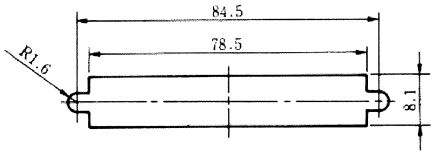

List of Engagement Combinations

Plug straight type	Receptacle right angle type
DX20EM-110P	DX10AM-110SE1 (50) or DX10AM-110SE2 (50)

The product information in this catalog is for reference only. Please request the Engineering Drawing for the most current and accurate design information.
All non-RoHS products have been discontinued, or will be discontinued soon. Please check the products status on the Hirose website RoHS search at www.hirose-connectors.com, or contact your Hirose sales representative.

Connecting Method (Discrete Cable IDC Type)

Connecting Tools

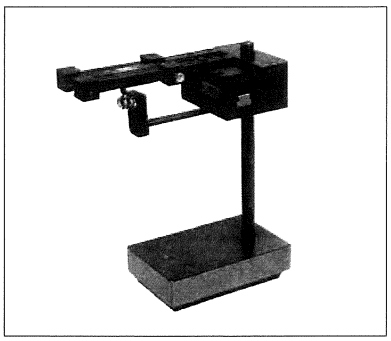

Cable distribution jig

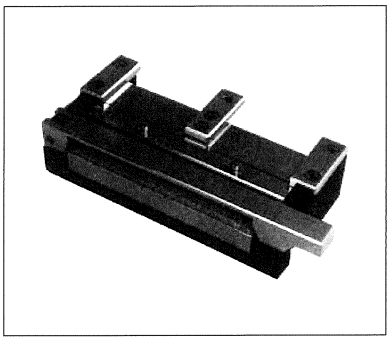

Cable shearing unit

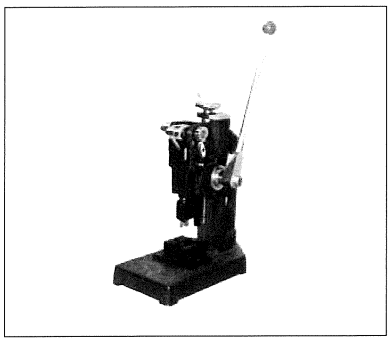

Shield case fixing jig

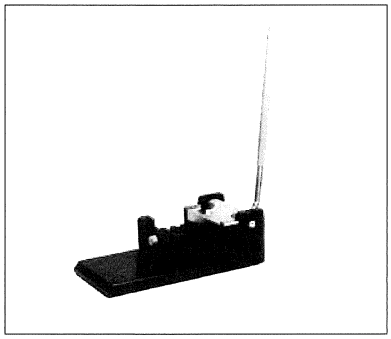

IDC press

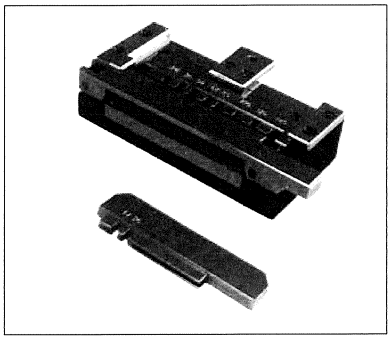

IDC guide plate unit

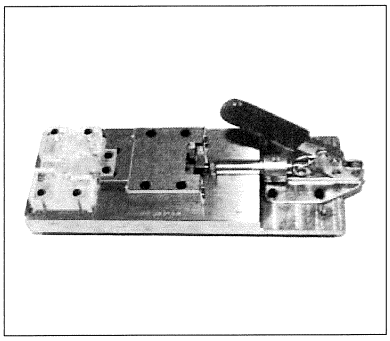

Hood insertion jig

List of Connecting Jigs and Accessories Plug Connector

Plug Connector

Cable	Connector Name	Process						
		Cable Distribution	Remaining part cutting		Crimping		Shield case fixing	Hood insertion
			Press	Unit	Press	Remaining Part cutting		
I/O Cable (Discrete wire)	DX30AM-14P	By hand DX30AM-CAT1 CL902-2090-0	DX30AM-HP1 CL902-0210-0	DX30AM-CU1 CL902-0211-2	DX30AM-HP1 CL902-0210-0	DX30AM-GPT1 CL902-0214-0	Order attachments separately ※1	Order attachments separately ※2
	DX30AM-20P							
	DX30AM-26P						DX30AM-CCT1 CL902-0213-8	DX30AM-HPT1 CL902-0216-6
	DX30AM-36P							
	DX30AM-50P							
	DX30AM-68P							
	DX30AM-80P							
	DX30AM-100P							Order attachments separately ※3
	DX30AM-110P							Order attachments separately ※4

※1 DX30AM-CCT1 (61) CL902-0213-8 (61)
DX30AM-CCT1 (62) CL902-0213-8 (62)
＊2 DX30AM-HPT1-14 CL902-0217-9
＊3 DX30AM-HPT1-100 CL902-0218-1
＊4 DX30AM-HPT1-110 CL902-0219-4

Receptacle Connector

Cable	Connector Name	Press	Guide plate
Ribbon Cable	DX33AM-68S-LNA (50)	Hi-Flex Connecting press HHP-502 CL550-0082-2	DX33AM-GPA (Come with pressure block) CL902-0233-5

Компания «ЭлектроПласт» предлагает заключение долгосрочных отношений при поставках импортных электронных компонентов на взаимовыгодных условиях!

Наши преимущества:

- Оперативные поставки широкого спектра электронных компонентов отечественного и импортного производства напрямую от производителей и с крупнейших мировых складов;
- Поставка более 17-ти миллионов наименований электронных компонентов;
- Поставка сложных, дефицитных, либо снятых с производства позиций;
- Оперативные сроки поставки под заказ (от 5 рабочих дней);
- Экспресс доставка в любую точку России;
- Техническая поддержка проекта, помощь в подборе аналогов, поставка прототипов;
- Система менеджмента качества сертифицирована по Международному стандарту ISO 9001;
- Лицензия ФСБ на осуществление работ с использованием сведений, составляющих государственную тайну;
- Поставка специализированных компонентов (Xilinx, Altera, Analog Devices, Intersil, Interpoint, Microsemi, Aeroflex, Peregrine, Syfer, Eurofarad, Texas Instrument, Miteq, Cobham, E2V, MA-COM, Hittite, Mini-Circuits,General Dynamics и др.);

Помимо этого, одним из направлений компании «ЭлектроПласт» является направление «Источники питания». Мы предлагаем Вам помощь Конструкторского отдела:

- Подбор оптимального решения, техническое обоснование при выборе компонента;
- Подбор аналогов;
- Консультации по применению компонента;
- Поставка образцов и прототипов;
- Техническая поддержка проекта;
- Защита от снятия компонента с производства.

Как с нами связаться

Телефон: 8 (812) 309 58 32 (многоканальный)
Факс: 8 (812) 320-02-42
Электронная почта: org@eplast1.ru
Адрес: 198099, г. Санкт-Петербург, ул. Калинина, дом 2, корпус 4, литера А.