General Specifications

Electrical Capacity (Resistive Load)

Power Level: 10A @ 125/250V AC for JWM & JWMW models; 10A @ 30V DC for JWMW; 16A @ 125/250V AC for JWL & JWLW models; 5A @ 72V DC for telecommunication applications

Other Ratings

Contact Resistance: 10 milliohms maximum for JWM & JWMW; 20 milliohms maximum for JWL & JWLW
Insulation Resistance: 1,000 megohms minimum @ 500V DC
Dielectric Strength: 2,000V AC minimum between contacts for 1 minute minimum; 4,000V AC minimum between contacts & case for 1 minute minimum
Mechanical Life: 25,000 operations minimum
Electrical Life: 25,000 operations minimum
Nominal Operating Force: JWM & JWMW Single Pole 3.92N & Double Pole 7.84N
JWL Single Pole 5.00N & Double Pole 10.00N; JWLW Double Pole 10.00N
Angle of Throw: 26°

Materials & Finishes

Rocker: Polyphenylene ether (UL94V-0)
Housing/Frame & Barrier: Polyamide (UL94V-0)
Interior Seal for JWM & JWL: Polyphenylene sulfide (UL94V-0)
Case/Base: Melamine (UL94V-0)
Contacts: Silver alloy with silver plating
Terminals: Brass with silver plating

Environmental Data

Operating Temperature Range: –25°C through +70°C (–13°F through +158°F) for JWM & JWL; –25°C through +85°C (–13°F through +185°F) for panel seal JWMW & JWLW models
Humidity: 90 ~ 95% humidity for 96 hours @ 40°C (104°F)
Vibration: 10 ~ 55Hz with peak-to-peak amplitude of 1.5mm traversing the frequency range & returning in 1 minute; 3 right angled directions for 2 hours
Shock: 50G (490m/s^2) acceleration (tested in 6 right angled directions, with 5 shocks in each direction)
Sealing: IP67 of IEC60529 standard for panel seal JWMW & JWLW models; dust resistant inner seal for others

Installation

Soldering Time & Temperature: Manual Soldering: See Profile A in Supplement section.

Standards & Certifications

Flammability Standards: UL94V-0 for rocker, housing, seal & case/base of JWL, JWM, JWMW & JWLW models
TV Ratings for UL & CSA: JWM (TV-5) Overload Test @ 120V AC for 50 operations:
Steady State Current (rms) 7.5A; Minimum Inrush Current (peak) 111A.
JWM (TV-5) Endurance Test @ 120V AC for 25,000 operations:
Steady State Current (rms) 5A; Minimum Inrush Current (peak) 78A.
JWL (TV-8) Overload Test @ 120V AC for 50 operations:
Steady State Current (rms) 12A; Minimum Inrush Current (peak) 163A.
JWL (TV-8) Endurance Test @ 120V AC for 25,000 operations:
Steady State Current (rms) 8A; Minimum Inrush Current (peak) 117A.

UL: File No. E44145
JWM & JWMW models recognized at 10A @ 250V AC.
JWMW recognized at 10A @ 30V DC.
JWL & JWLW models recognized at 16A @ 250V AC; JWL at 5A @ 72V DC.

Models below recognized only when ordered with marking on switch.
JWMW: add "/U" to end of part number to order UL mark on switch; add "/CUL" to end of part number to order cULus mark on switch.
JWL: add "/U-DC" to end of part number to request UL rating on DC rated switch.

CSA: File No. 023535_0_000
JWM & JWMW models certified at 10A @ 250V AC; JWL models certified at 16A @ 250V AC .

VDE: License No. 115637
JWM models approved at steady state 5A, inrush 80A, resistive 10A, & motor load 6A all at 250V AC; JWL models approved at steady state inrush 128A, resistive 16A, & motor load 8A all at 250V AC.
Note: JWM & JWL Double Pole, Single Throw models approved only with the international ON-OFF symbols on the actuator.

Distinctive Characteristics

Industry's first molded rocker with TV rating. Designed to handle large inrush current, with high electrical capacity of 10 and 16 Amps. JWM models certified for TV-5 rating and JWL models for TV-8 rating.

JWMW and JWLW panel seal versions meet IP67 of IEC60529 Standards (similar to NEMA 4 and 6).

Prominent external insulating barriers increase insulation resistance and dielectric strength.

Uniquely constructed to break light contact welds.

Increased electrical life with specially designed plate to minimize contact bounce.

Constructed for dust resistance with interior cover between actuator and contact area.

Terminals are molded in and epoxy sealed to lock out flux, dust, and other contaminants.

Solder lug/quick connect terminals can be used with connector.

Housing and case of heat resistant resin meet UL94V-0 standard.

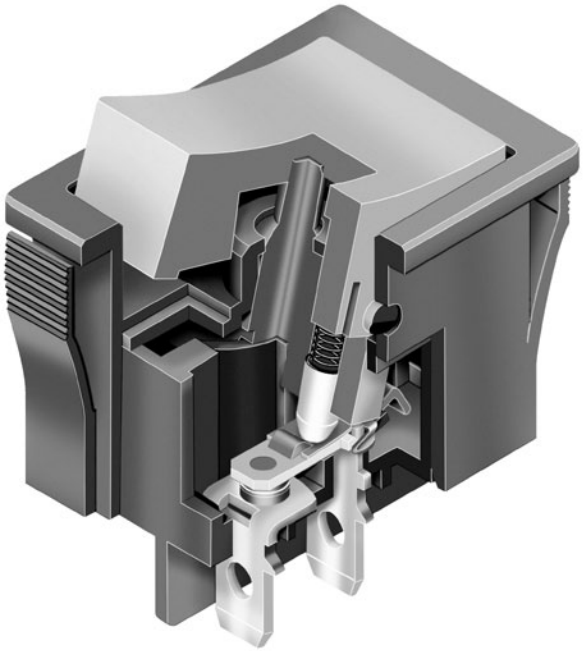

Actual Size JWM

TYPICAL SWITCH ORDERING EXAMPLE

JW [LW] [2] [1] [R] [A] [1] [A] — [ ]

Ratings

M	10A @ 125/250V AC
MW	Panel Seal 10A @ 125/250V AC
L	16A @ 125/250V AC
LW	Panel Seal 16A @ 125/250V AC ← NEW

Poles

1	SPST SPDT
2	DPST DPDT

Notes:
DPST must have international ON-OFF symbols for VDE approval.
JWLW available in DPST & DPDT only.

Circuits

1	ON	NONE	OFF
2	ON	NONE	ON

Barrier Types

R	No Barrier
B	With Barrier

Note: JWMW & JWLW combine with code R only.

Cap Colors

A	Black
B	Ivory
C	Red
H	Gray

Note: JWMW & JWLW available with black or red caps only.

Inscription Orientation

No Code	No Inscription
1	Horizontal
2	Vertical

These are inscriptions for Single Throw models only.

Housing Colors

A	Black
B	Ivory
H	Gray

Note: JWMW & JWLW available with black only.

Barrier Colors

A	Black
B	Ivory
H	Gray

Note: Wire harness & cable assemblies offered only in Americas

IMPORTANT:

Standard markings for JWM & JWL: TV Rating, UL, CSA & VDE.
Standard marking for JWLW: cULus.
Specific models, ratings, & ordering instructions for international approvals are noted on General Specifications page.

DESCRIPTION FOR TYPICAL ORDERING EXAMPLE

JWLW21RA1A ← NEW

Black Rocker Cap with International ON-OFF Symbols in Horizontal Orientation

Black Housing

DPST ON-NONE-OFF Circuit

16A @ 125/250V AC

RATINGS

M	Power Level	10A @ 125/250V AC		MW	Panel Seal	Power Level	10A @ 125/250V AC
L	Power Level	16A @ 125/250V AC	NEW →	LW	Panel Seal	Power Level	16A @ 125/250V AC

POLES & CIRCUITS

		Rocker Position			Connected Terminals			Throw & Schematics
Pole	Model	Down	Center	Up	Down	Center	Up	Note: Terminal numbers are not actually on the switch. Actuator positions oriented with switch part number facing front.
SP	JWM11 JWMW11 JWL11	ON	NONE	OFF	1-1b	OPEN	OPEN	SPST
SP	JWM12 JWMW12 JWL12	ON	NONE	ON	1-1b	OPEN	1-1a	SPDT 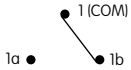
DP	JWM21 JWMW21 JWL21 JWLW21	ON	NONE	OFF	1-1b 2-2b	OPEN	OPEN	DPST 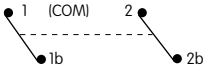
DP	JWM22 JWMW22 JWL22 JWLW22	ON	NONE	ON	1-1b 2-2b	OPEN	1-1a 2-2a	DPDT 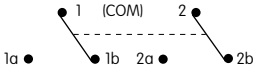

BARRIER TYPES & COLORS

R No Barrier

JWM

JWL

No-barrier type has a flat flange which is an integral part of the switch.

JWMW and JWLW panel seal devices have exterior seal of acrylonitrile butadiene rubber covering the flange.

Flange/Housing Material: Polyamide Finish: Matte

B With Barrier

JWM

JWL

Barrier type designates that either AT217 (for JWM) or AT218 (for JWL) is factory assembled.
Dimensions for barriers are shown in the Accessories section.

Barrier Colors Available: A Black B Ivory H Gray

Barrier Material: Polyamide Finish: Matte

CAP COLORS

Cap Colors Available: A Black B Ivory C Red H Gray

Cap Material: Polyphenelene Oxide

Finish: Matte

Rocker cap is an integral part of the switch and not available separately.

JWMW and JWLW available with black or red caps only.

INSCRIPTIONS

No Code — **No Inscription**

DPST models without inscriptions do not have VDE approval.

1 — **Inscription for Horizontal Mounting**

2 — **Inscription for Vertical Mounting**

The IEC symbols for On-Off are supplied with Single Throw models only.
Orientation of inscription must be selected.
Inscription Colors: Black ink on Ivory or Gray cap. White ink on Black or Red cap.
Contact factory for other inscriptions.

HOUSING

Material: Polyamide

Finish: Matte

Colors Available: **A** Black **B** Ivory **H** Gray

JWMW and JWLW panel seal models available with black housing only.

TERMINALS

Solder Lug/Quick Connect .110" (2.8mm)

JWM & JWMW

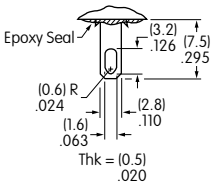

Solder Lug/Quick Connect .187" (4.75mm)

JWL & JWLW

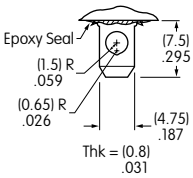

PANEL CUTOUTS

Panel Thickness Range

Without Barrier (JWM & JWMW):
.039" ~ .157" (1.0mm ~ 4.0mm)

With Barrier (JWM):
.024" ~ .126" (0.6mm ~ 3.2mm)

JWM

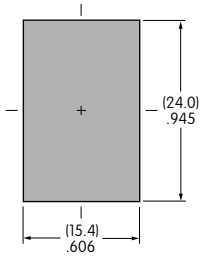

JWMW

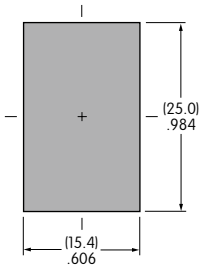

Panel Thickness Range

Without Barrier (JWL & JWLW):
.039" ~ .157" (1.0mm ~ 4.0mm)

With Barrier (JWL):
.024" ~ .126" (0.6mm ~ 3.2mm)

JWL

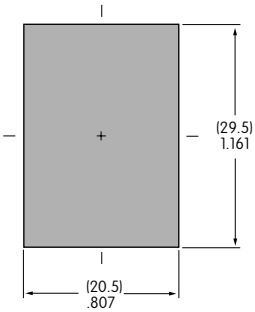

JWLW

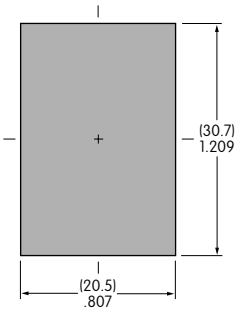

TYPICAL SWITCH DIMENSIONS FOR JWM & JWMW

Single & Double Pole — No Barrier • 10 Amp

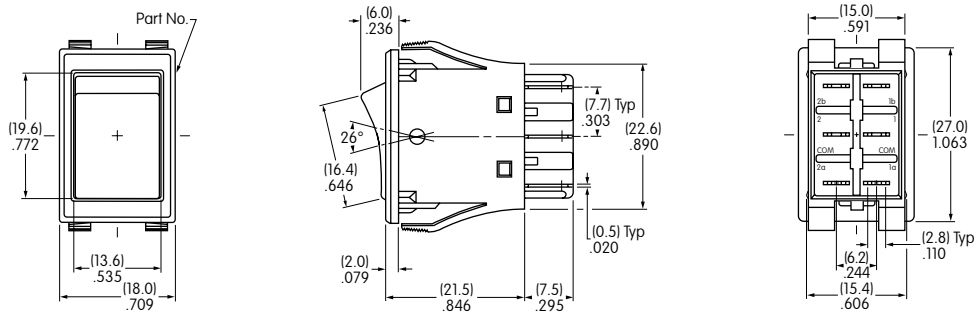

JWM11RC1A

Single & Double Pole — With Barrier • 10 Amp

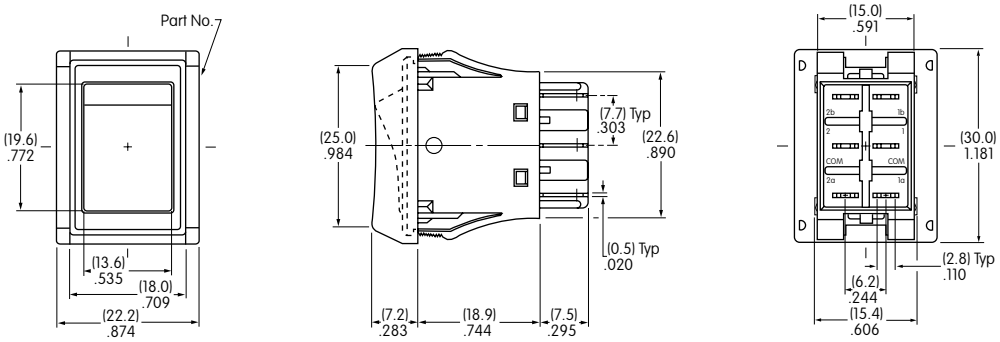

JWM11BCA-H

Single & Double Pole — Panel Seal • No Barrier • 10 Amp

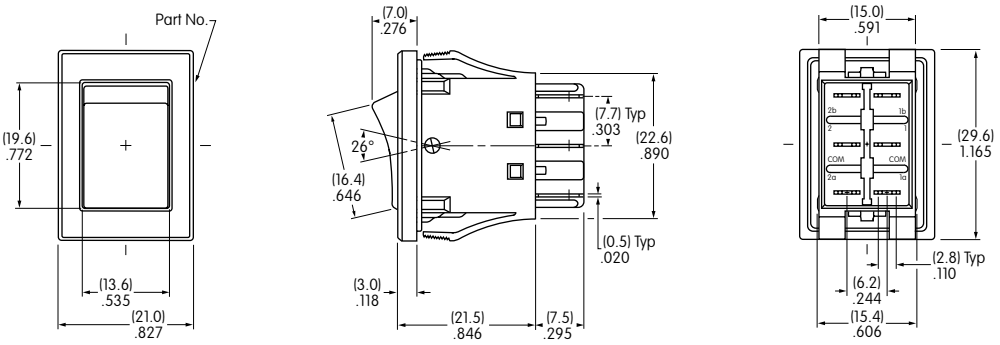

JWMW22RCA

Single pole double throw models do not have terminals 2a, 2, & 2b; single throw models do not have 1a & 2a.

TYPICAL SWITCH DIMENSIONS FOR JWL & JWLW

No Barrier • 16 Amp

Single & Double Pole

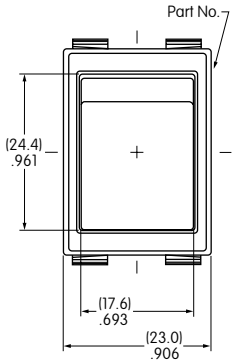

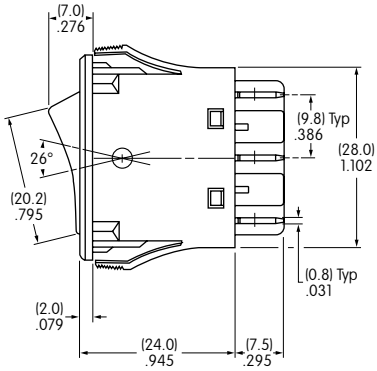

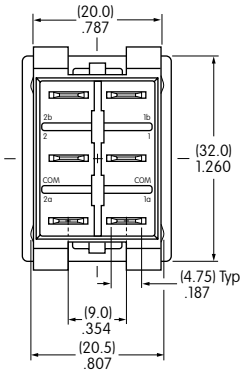

JWL21RC2A Single pole double throw models do not have terminals 2a, 2, & 2b; single throw models do not have 1a & 2a.

With Barrier • 16 Amp

Single & Double Pole

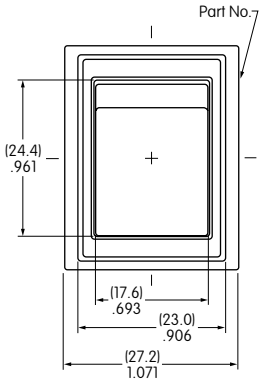

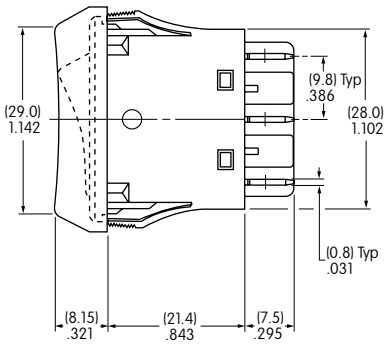

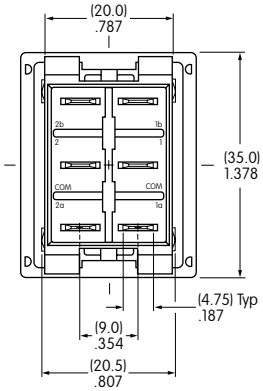

JWL11BCA-H Single pole double throw models do not have terminals 2a, 2, & 2b; single throw models do not have 1a & 2a.

Panel Seal • 16 Amp • Inscription *NEW*

Double Pole Single Throw

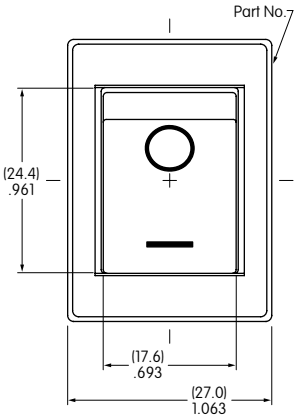

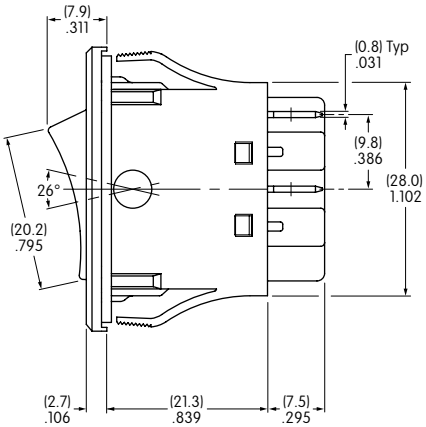

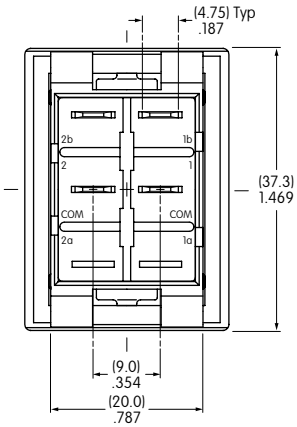

JWLW21RA1A

TYPICAL SWITCH DIMENSIONS FOR JWLW

Double Pole Double Throw NEW → **Panel Seal • 16 Amp • No Inscription**

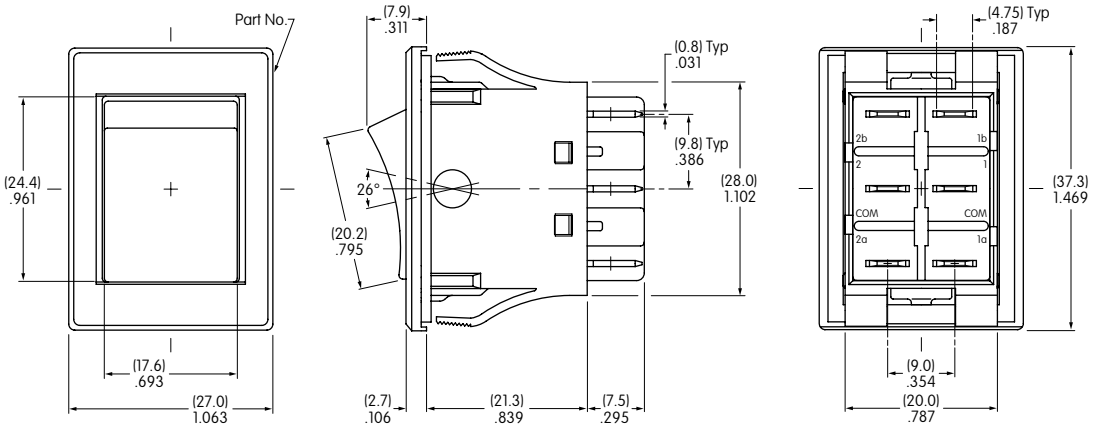

JWLW22RAA

OPTIONAL DUST COVER

AT4126
Dust Cover for JWL Rocker

When installed, the Dust Cover protects the switch from an environment containing small particles and dust. The switch is operable with the Dust Cover in place.

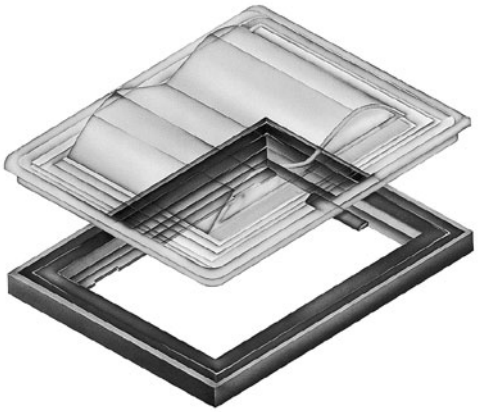

Materials:

Lid: Clear Polyvinyl Chloride
Base: Black Polyamide

Recommended Temperature Range:

–10° ~ +70°C (+14°F ~ +158°F)
Loses pliability below 0°C (+32°F)

Recommended Panel Thickness:

.031″ ~ .134″ (0.8mm ~ 3.4mm)

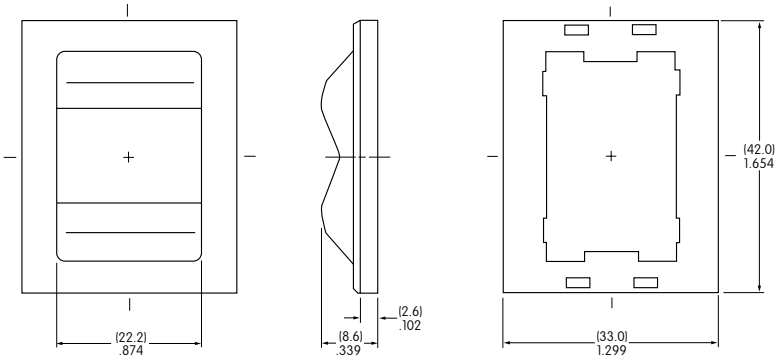

Top **Side** **Bottom**

Assembly Instructions:

1. Insert bottom of switch through the **base** until the tabs lock into place.
2. Snap the switch into the panel.
3. Seat the **lid** into the **grooves** of the **base**.

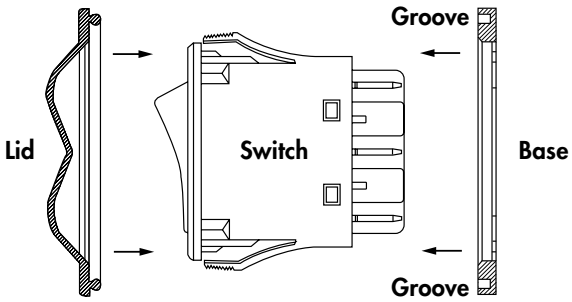

Notes

1. The dust cover is not for use with JWLW.
2. The dust cover cannot be used with the barrier option.

PRECAUTIONS FOR HANDLING & STORAGE FOR JWMW/LW (PANEL SEAL TYPES)

Operating Environment

- Do not install switch where heavy dust collection occurs. Dust build-up under rocker may affect switch actuation.
- Do not actuate switch if submerged in water or oil.
- Installation is not recommended on horizontal surface in an environment where frequent splashing of water may occur. In such an environment, a minimum 30° angle installation is advisable. If there is a possibility of freezing, install vertically so no moisture will be retained within switch housing.

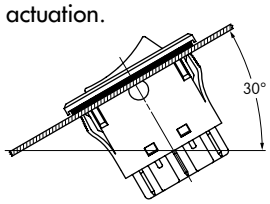

Panel Mounting

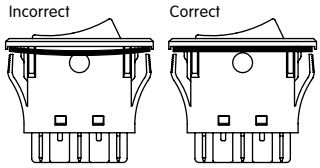

- Before snapping a switch into the panel, align the gasket evenly under bezel of the switch.
- When mounting into a panel, apply equal pressure to sides of bezel and insert parallel to panel.
- After mounting a switch, be sure there are no gaps between switch and panel. Lightly push into panel.
- After installing into panel, do not apply excessive force.
- After panel installation and wiring is completed, do not apply force horizontally or vertically from behind panel.

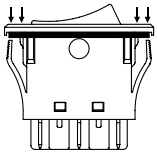

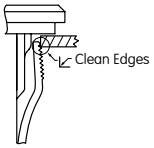

- Behind the panel, cut area should be squared. If front of panel is painted, do not allow any paint to collect in corners of cutout to prevent level mounting.
- Avoid reinstalling a switch once it has been mounted in a panel. This may cause deterioration of panel sealability.

Компания «ЭлектроПласт» предлагает заключение долгосрочных отношений при поставках импортных электронных компонентов на взаимовыгодных условиях!

Наши преимущества:

- Оперативные поставки широкого спектра электронных компонентов отечественного и импортного производства напрямую от производителей и с крупнейших мировых складов;
- Поставка более 17-ти миллионов наименований электронных компонентов;
- Поставка сложных, дефицитных, либо снятых с производства позиций;
- Оперативные сроки поставки под заказ (от 5 рабочих дней);
- Экспресс доставка в любую точку России;
- Техническая поддержка проекта, помощь в подборе аналогов, поставка прототипов;
- Система менеджмента качества сертифицирована по Международному стандарту ISO 9001;
- Лицензия ФСБ на осуществление работ с использованием сведений, составляющих государственную тайну;
- Поставка специализированных компонентов (Xilinx, Altera, Analog Devices, Intersil, Interpoint, Microsemi, Aeroflex, Peregrine, Syfer, Eurofarad, Texas Instrument, Miteq, Cobham, E2V, MA-COM, Hittite, Mini-Circuits,General Dynamics и др.);

Помимо этого, одним из направлений компании «ЭлектроПласт» является направление «Источники питания». Мы предлагаем Вам помощь Конструкторского отдела:

- Подбор оптимального решения, техническое обоснование при выборе компонента;
- Подбор аналогов;
- Консультации по применению компонента;
- Поставка образцов и прототипов;
- Техническая поддержка проекта;
- Защита от снятия компонента с производства.

Как с нами связаться

Телефон: 8 (812) 309 58 32 (многоканальный)
Факс: 8 (812) 320-02-42
Электронная почта: org@eplast1.ru
Адрес: 198099, г. Санкт-Петербург, ул. Калинина, дом 2, корпус 4, литера А.