PRODUCT NUMBER
SEE SHEET 3

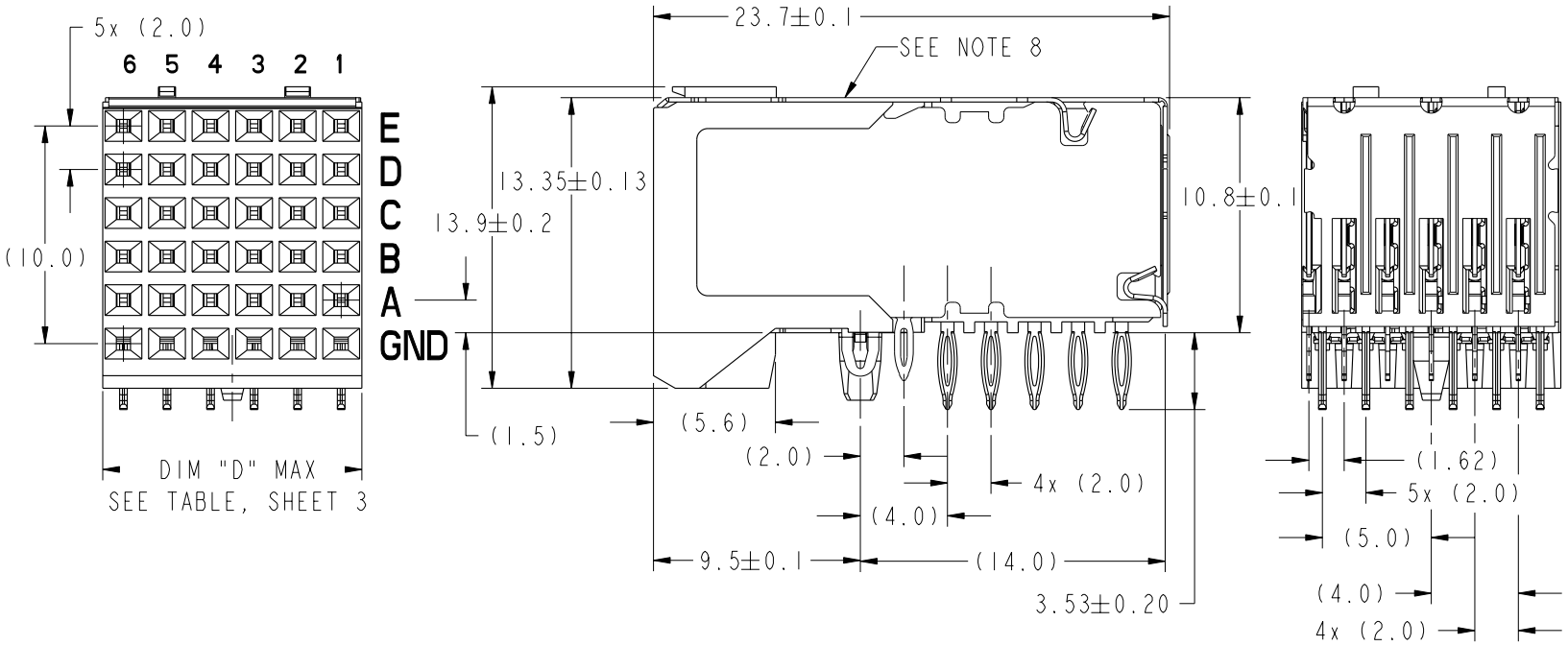

mat'l code	SEE NOTE 2			tolerances unless otherwise specified			CUSTOMER	FCI www.fciconnect.com
ltr	ecn no.	dr	date				COPY	
P	V06-0569	DCH	2006-06-12	linear	0.X ±0.3		projection	title RIGHT ANGLE SIGNAL RECEPTACLE 5 ROW MONOBLOCK
R	V07-0381	DCH	2007-05-31		0.XX ±0.10			
S	V07-0353	HTB	2007-06-06		0.XXX ±0.050			
T	V07-0433	DCH	2007-06-27	angles	0° ±2°			product family METRAL 1000 code 213
U	V08-0085	HTB	2008-02-18	dr	S. KLINE	2001-07-06	MM	
-	-	-	-	engr	W.J. SWAIN	2001-07-06		size A dwg no 84688 sheet 1 of 5
N	V05-0870	DAI	2005-09-14	chr	W.J. SWAIN	2001-07-06	scale 3:1	
				appd	W.J. SWAIN	2001-07-06		
sheet index	revision	U	U	U	U	U		
	sheet	1	2	3	4	5		

cage code 22526

This document is the property of and embodies CONFIDENTIAL and PROPRIETARY information of FCI. No part of the information shown on this document may be used in any way or disclosed to others without the written consent of FCI. Copyright FCI.

REV E - 2006-04-18

Pro/E

PDM: Rev:U STATUS: Released Printed: May 13, 2011

PRODUCT NUMBER
SEE SHEET 3

PRESS-FIT HOLES		
HOLE DIAMETER AFTER PLATING	Ø0.65-Ø0.80 *	Ø1.53
DRILLED HOLE	Ø0.81-Ø0.86 (Ø0.85 DRILL)	Ø1.61-Ø1.66 (Ø1.65 DRILL)
COPPER PLATING	0.025-0.050	0.025-0.050
SnPb PLATING	0.005-0.015	0.005-0.015

* SEE DRAWING 58351 FOR OTHER OPTIONS

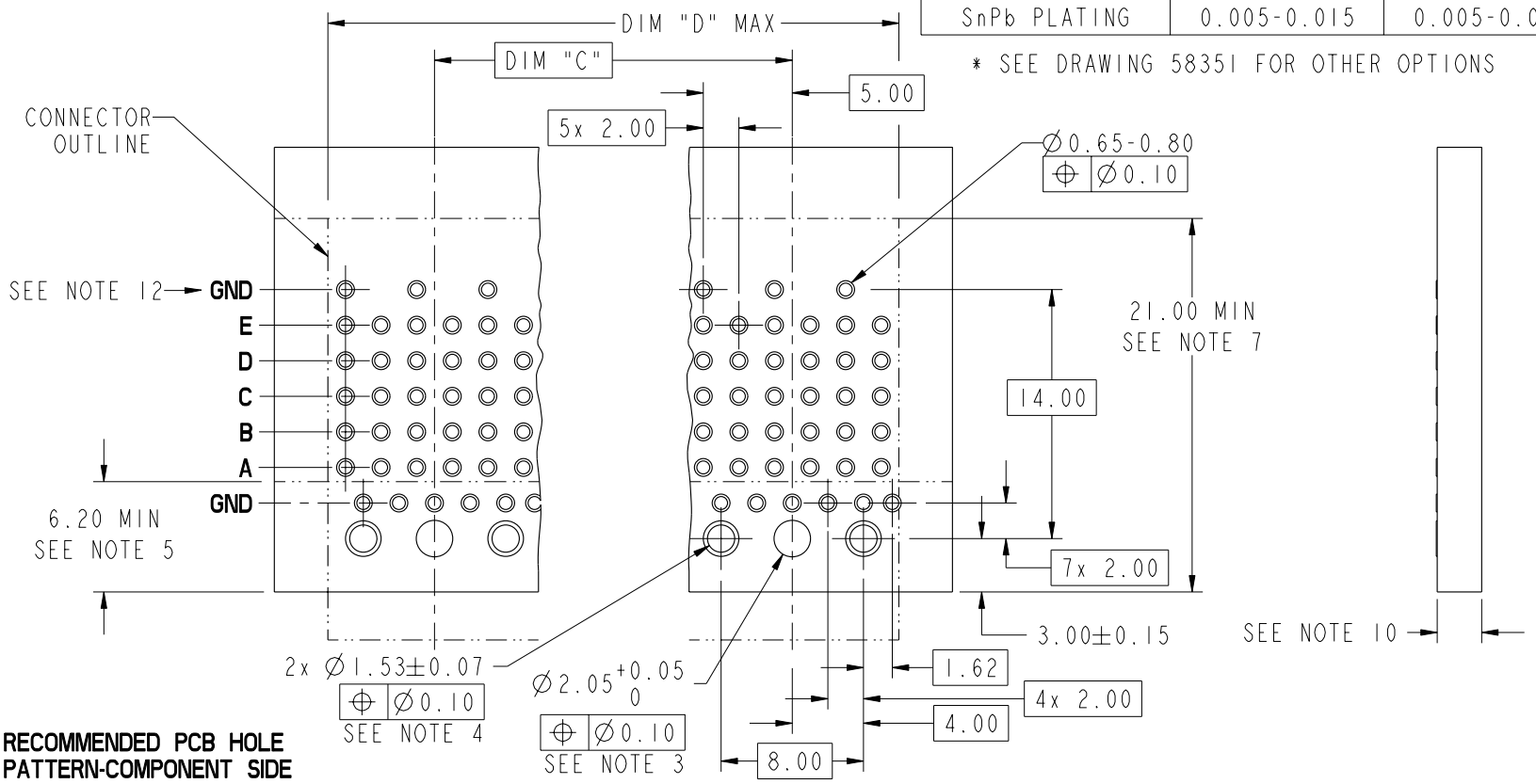

RECOMMENDED PCB HOLE PATTERN-COMPONENT SIDE

mat'l code SEE NOTE 2				tolerances unless otherwise specified			CUSTOMER	FCI www.fciconnect.com
ltr	ecn no.	dr	date	linear	0.X ±0.3		COPY	
U					0.XX ±0.10		projection	title RIGHT ANGLE SIGNAL RECEPTACLE 5 ROW MONOBLOCK
					0.XXX ±0.050			
				angles	0° ±2°			
				dr	S. KLINE	2001-07-06	MM	product family METRAL 1000 code 213
				engr	W.J. SWAIN	2001-07-06		size A dwg no 84688 sheet 2
				chr	W.J. SWAIN	2001-07-06	scale 1:1	
				appd	W.J. SWAIN	2001-07-06		
sheet index	revision sheet							cage code 22526

This document is the property of and embodies CONFIDENTIAL and PROPRIETARY information of FCI. No part of the information shown on this document may be used in any way or disclosed to others without the written consent of FCI. Copyright FCI.

REV E - 2006-04-18

Pro/E

PDM: Rev:U STATUS: Released Printed: May 13, 2011

PRODUCT NUMBER	CONTACT PLATING PERFORMANCE LEVEL	PRESS-FIT TAIL PLATING	DIM "C"	DIM "D"
84688-101	TELCORDIA CO	STANDARD (SnPb)	---	11.98
84688-101LF	TELCORDIA CO	LEAD FREE (Sn)	---	11.98
84688-102	TELCORDIA CO	STANDARD (SnPb)	12.00	23.98
84688-102LF	TELCORDIA CO	LEAD FREE (Sn)	12.00	23.98
84688-103	TELCORDIA CO	STANDARD (SnPb)	24.00	35.98
84688-103LF	TELCORDIA CO	LEAD FREE (Sn)	24.00	35.98
84688-104	TELCORDIA CO	STANDARD (SnPb)	36.00	47.98
84688-104LF	TELCORDIA CO	LEAD FREE (Sn)	36.00	47.98
84688-105	TELCORDIA CO	STANDARD (SnPb)	48.00	59.98
84688-105LF	TELCORDIA CO	LEAD FREE (Sn)	48.00	59.98
84688-106	TELCORDIA CO	STANDARD (SnPb)	60.00	71.98
84688-106LF	TELCORDIA CO	LEAD FREE (Sn)	60.00	71.98
84688-108	OBSOLETE			
84688-108LF	OBSOLETE			
84688-301	CUSTOMER SPECIAL	STANDARD (SnPb)	---	11.98
84688-301LF	CUSTOMER SPECIAL	LEAD FREE (Sn)	---	11.98
84688-302	CUSTOMER SPECIAL	STANDARD (SnPb)	12.00	23.98
84688-302LF	CUSTOMER SPECIAL	LEAD FREE (Sn)	12.00	23.98
84688-303	CUSTOMER SPECIAL	STANDARD (SnPb)	24.00	35.98
84688-303LF	CUSTOMER SPECIAL	LEAD FREE (Sn)	24.00	35.98
84688-304	CUSTOMER SPECIAL	STANDARD (SnPb)	36.00	47.98
84688-304LF	CUSTOMER SPECIAL	LEAD FREE (Sn)	36.00	47.98
84688-305	CUSTOMER SPECIAL	STANDARD (SnPb)	48.00	59.98
84688-305LF	CUSTOMER SPECIAL	LEAD FREE (Sn)	48.00	59.98
84688-306	CUSTOMER SPECIAL	STANDARD (SnPb)	60.00	71.98
84688-306LF	CUSTOMER SPECIAL	LEAD FREE (Sn)	60.00	71.98
84688-308	OBSOLETE			
84688-308LF	OBSOLETE			

PRODUCT NUMBER	CONTACT PLATING PERFORMANCE LEVEL	PRESS-FIT TAIL PLATING	DIM "C"	DIM "D"
84688-901	TELCORDIA CO	STANDARD (SnPb)	---	11.98
84688-901LF	TELCORDIA CO	LEAD FREE (Sn)	---	11.98
84688-901S	CUSTOMER SPECIAL	STANDARD (SnPb)	---	11.98
84688-901SLF	CUSTOMER SPECIAL	LEAD FREE (Sn)	---	11.98
84688-902	TELCORDIA CO	STANDARD (SnPb)	12.00	23.98
84688-902LF	TELCORDIA CO	LEAD FREE (Sn)	12.00	23.98
84688-902S	CUSTOMER SPECIAL	STANDARD (SnPb)	12.00	23.98
84688-902SLF	CUSTOMER SPECIAL	LEAD FREE (Sn)	12.00	23.98
84688-903	TELCORDIA CO	STANDARD (SnPb)	24.00	35.98
84688-903LF	TELCORDIA CO	LEAD FREE (Sn)	24.00	35.98
84688-903S	CUSTOMER SPECIAL	STANDARD (SnPb)	24.00	35.98
84688-903SLF	CUSTOMER SPECIAL	LEAD FREE (Sn)	24.00	35.98
84688-904	TELCORDIA CO	STANDARD (SnPb)	36.00	47.98
84688-904LF	TELCORDIA CO	LEAD FREE (Sn)	36.00	47.98
84688-904S	CUSTOMER SPECIAL	STANDARD (SnPb)	36.00	47.98
84688-904SLF	CUSTOMER SPECIAL	LEAD FREE (Sn)	36.00	47.98
84688-905	TELCORDIA CO	STANDARD (SnPb)	48.00	59.98
84688-905LF	TELCORDIA CO	LEAD FREE (Sn)	48.00	59.98
84688-905S	CUSTOMER SPECIAL	STANDARD (SnPb)	48.00	59.98
84688-905SLF	CUSTOMER SPECIAL	LEAD FREE (Sn)	48.00	59.98
84688-906	TELCORDIA CO	STANDARD (SnPb)	60.00	71.98
84688-906LF	TELCORDIA CO	LEAD FREE (Sn)	60.00	71.98
84688-906S	CUSTOMER SPECIAL	STANDARD (SnPb)	60.00	71.98
84688-906SLF	CUSTOMER SPECIAL	LEAD FREE (Sn)	60.00	71.98
84688-908	OBSOLETE			
84688-908LF	OBSOLETE			

This document is the property of and embodies CONFIDENTIAL and PROPRIETARY information of FCI. No part of the information shown on this document may be used in any way or disclosed to others without the written consent of FCI. Copyright FCI.

mat'l code SEE NOTE 2

ltr	ecn no.	dr	date
U			

tolerances unless otherwise specified

linear	0.X ±0.3	
	0.XX ±0.10	
	0.XXX ±0.050	
angles	0° ±2°	
dr	S. KLINE	2001-07-06
engr	W.J. SWAIN	2001-07-06
chr	W.J. SWAIN	2001-07-06
appd	W.J. SWAIN	2001-07-06

CUSTOMER COPY

projection

MM

scale 3:1

www.fciconnect.com

title RIGHT ANGLE SIGNAL RECEPTACLE 5 ROW MONOBLOCK

product family METRAL 1000 | code 213

size A | dwg no 84688 | sheet 3

sheet index	revision sheet

cage code 22526

Pro/E

REV E - 2006-04-18

PDM: Rev:U STATUS: Released Printed: May 13, 2011

PRODUCT NUMBER
SEE SHEET 3

NOTES

1. UNLESS OTHERWISE SPECIFIED ALL DIMENSIONS AND TOLERANCES ARE IN ACCORDANCE WITH ASME Y14.5M, 1994

2. HOUSING MATERIAL: LIQUID CRYSTAL POLYMER, GLASS FILLED
   FLAME RETARDANT ACC. UL94V-0
   GROUND SHIELD MATERIAL: COPPER ALLOY
   SIGNAL CONTACT MATERIAL: COPPER ALLOY

3. ∅2.05 HOLE IS UNPLATED

4. ∅1.53 PLATED HOLES (2x) ARE FOR GROUNDS

5. AVOID TRACES IN THIS AREA ON TOP OF PCB DUE TO EXPOSED GROUND SHIELD

6. UNDERPLATING FOR SHIELD AND SIGNAL CONTACTS IS 1.3 µm Ni MIN

7. COMPONENT KEEP OUT ZONE FOR PRESS BLOCK CLEARANCE

8. PRODUCT MARKING: PRODUCT CODE, DATE AND LOT CODE

9. SEE GS-20-017 FOR APPLICATION OF CONNECTOR TO PCB

10. PCB THICKNESS RANGE: 1.3mm TO 2.5mm

11. SEE PRODUCT SPECIFICATION GS-12-110 FOR PRODUCT PERFORMANCE CHARACTERISTICS.

12. THIS GROUND ROW OF VIA-HOLES ONLY REQUIRED FOR PREVIOUS REVISIONS OF THIS DESIGN WHERE THE TOP SHIELDS HAD EON PRESS-FIT. DUE TO INVENTORIES OF PREVIOUS VERSION WE RECOMMEND THEY BE DESIGNED IN.

13. PRODUCTS WHERE THE PART NUMBER ENDS IN LF MEET EUROPEAN UNION DIRECTIVES AND OTHER COUNTRY REGULATIONS AS DESCRIBED IN GS-22-008. ALL PRODUCTS WILL WITHSTAND EXPOSURE TO 260° FOR 60 SECONDS IN A CONVECTION, INFRA-RED OR VAPOR PHASE REFLOW OVEN.

mat'l code SEE NOTE 2				tolerances unless otherwise specified			CUSTOMER	FCI www.fciconnect.com
ltr	ecn no.	dr	date	linear	0.X ±0.3		COPY	
U					0.XX ±0.10		projection	title RIGHT ANGLE SIGNAL RECEPTACLE 5 ROW MONOBLOCK
					0.XXX ±0.050			
				angles	0° ±2°			
				dr	S. KLINE	2001-07-06	MM	product family METRAL 1000 code 213
				engr	W.J. SWAIN	2001-07-06		
				chr	W.J. SWAIN	2001-07-06	scale 1:1	size A dwg no 84688 sheet 4
				appd	W.J. SWAIN	2001-07-06		
sheet index	revision sheet							cage code 22526

This document is the property of and embodies CONFIDENTIAL and PROPRIETARY information of FCI. No part of the information shown on this document may be used in any way or disclosed to others without the written consent of FCI. Copyright FCI.

REV E - 2006-04-18

Pro/E

PDM: Rev:U STATUS: Released Printed: May 13, 2011

PRODUCT NUMBER
SEE SHEET 3

DISTANCE FROM CONTACT POINT TO BOARD	
CONTACT	DISTANCE
A	12.5
B	16.2
C	19.5
D	22.3
E	25.2

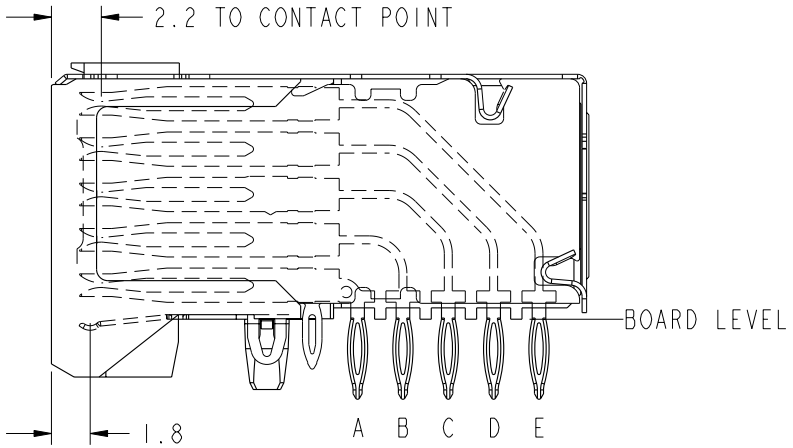

CONTACT POINT AND SKEW

mat'l code SEE NOTE 2				tolerances unless otherwise specified			CUSTOMER	FCI www.fciconnect.com
ltr	ecn no.	dr	date				COPY	
U				linear	0.X ±0.3		projection	title RIGHT ANGLE SIGNAL RECEPTACLE 5 ROW MONOBLOCK
					0.XX ±0.10			
					0.XXX ±0.050			
				angles	0° ±2°			
				dr	S. KLINE	2001-07-06	MM	product family METRAL 1000 code 213
				engr	W.J. SWAIN	2001-07-06		size A dwg no 84688 sheet 5
				chr	W.J. SWAIN	2001-07-06	scale 3:1	
				appd	W.J. SWAIN	2001-07-06		
sheet index	revision sheet							cage code 22526

This document is the property of and embodies CONFIDENTIAL and PROPRIETARY information of FCI. No part of the information shown on this document may be used in any way or disclosed to others without the written consent of FCI. Copyright FCI.

Компания «ЭлектроПласт» предлагает заключение долгосрочных отношений при поставках импортных электронных компонентов на взаимовыгодных условиях!

Наши преимущества:

- Оперативные поставки широкого спектра электронных компонентов отечественного и импортного производства напрямую от производителей и с крупнейших мировых складов;
- Поставка более 17-ти миллионов наименований электронных компонентов;
- Поставка сложных, дефицитных, либо снятых с производства позиций;
- Оперативные сроки поставки под заказ (от 5 рабочих дней);
- Экспресс доставка в любую точку России;
- Техническая поддержка проекта, помощь в подборе аналогов, поставка прототипов;
- Система менеджмента качества сертифицирована по Международному стандарту ISO 9001;
- Лицензия ФСБ на осуществление работ с использованием сведений, составляющих государственную тайну;
- Поставка специализированных компонентов (Xilinx, Altera, Analog Devices, Intersil, Interpoint, Microsemi, Aeroflex, Peregrine, Syfer, Eurofarad, Texas Instrument, Miteq, Cobham, E2V, MA-COM, Hittite, Mini-Circuits,General Dynamics и др.);

Помимо этого, одним из направлений компании «ЭлектроПласт» является направление «Источники питания». Мы предлагаем Вам помощь Конструкторского отдела:

- Подбор оптимального решения, техническое обоснование при выборе компонента;
- Подбор аналогов;
- Консультации по применению компонента;
- Поставка образцов и прототипов;
- Техническая поддержка проекта;
- Защита от снятия компонента с производства.

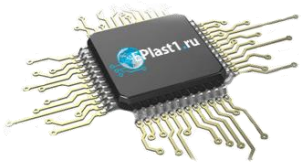

Как с нами связаться

Телефон: 8 (812) 309 58 32 (многоканальный)
Факс: 8 (812) 320-02-42
Электронная почта: org@eplast1.ru
Адрес: 198099, г. Санкт-Петербург, ул. Калинина, дом 2, корпус 4, литера А.