Littelfuse®
Expertise Applied | Answers Delivered

POWR-BLOKS™

Distribution Blocks • Splicer Blocks • Covers

Description

POWR-BLOKS™ power distribution blocks offer a safe, convenient way of splicing cables, providing a fixed junction tap-off point or splitting primary power into secondary circuits. Lx2xxx-DIN series offers integral DIN-Rail mount and an optional hinged safety cover.

Optional power distribution block covers provide protection against accidental shorting between poles caused by loose wires, tools, or other conductive material. They also protect personnel from accidentally contacting energized connectors. To order protective covers, match the number of poles for the block to the cover.

Applications

Typical applications include heating, air conditioning and refrigeration systems, elevator systems, material handling equipment, control panels, motor controls, switchgear, and anywhere power needs to be distributed to more than one load.

Connectors

Box lug connectors are designed for use with a single, solid or class B or C stranded conductor. Use of more than one conductor per connector opening or use of extra-flexible, fine-stranded conductors, such as welding cable, voids the UL Listing and may cause overheating. Manufacturers of cable terminations can furnish crimp-on sleeves for fine stranded conductors which permit these conductors to be used with box lugs.

Ampere Ratings

The ampere rating per pole for power distribution blocks is based on the line ampacity of 75°C insulated conductors per NEC® Table 310.16. If 60°C insulated conductors are used, load must not exceed the ampacity of 60°C conductors. Use of conductors rated in excess of 75°C is permitted (for example 90°C), however, load must not exceed the ampacity of 75°C conductors.

Specifications

Voltage Rating	600 V
Current Rating	Based on NEC Table 310.16, using 75°C copper wire
Material	Phenolic rated at 150°C and Thermoplastic rated at 125°C (LD1400 and LS1300 series only)
Connector	Standard: Highly conductive aluminum, tin plated Copper: Highly conductive copper, tin plated
Flammability Rating	UL94 V-0
Approvals	UL Recognized - LD/LS Series (File: E171395) UL Recognized - LFD/LFS Series (File: E309688) CSA Certified (File: LR700111)
Environmental	RoHS compliant, Lead (Pb) free

Ordering Information

See Selection Guide on next page

Web Resources

For dimension, CAD and 3-D drawings, visit:
www.littelfuse.com/powrbloks

Hinged Plastic Covers

CATALOG/ ORDERING NUMBER	FOR USE WITH DISTRIBUTION/SPLICER BLOCK NO.	POLES
0LCH1321Z	LD2xxx-1DIN / LS2xxx-1DIN	1
0LCH1322Z	LD2xxx-2DIN / LS2xxx-2DIN	2
0LCH1323Z	LD2xxx-3DIN / LS2xxx-3DIN	3

Note: Optional hinged covers snap on to blocks.

Clear Plastic Covers

CATALOG/ ORDERING NUMBER	FOR USE WITH DISTRIBUTION/SPLICER BLOCK NO.	POLES
LPBC02	LD0xxx-2 / LS0xxx-2	2
LPBC03	LD0xxx-3 / LS0xxx-3	3
LPBC21	LD2xxx-1 / LS2xxx-1	1
LPBC22	LD2xxx-2 / LS2xxx-2	2
LPBC23	LD2xxx-3 / LS2xxx-3	3
LPBC31	LD3xxx-1 / LS3xxx-1	1
LPBC32	LD3xxx-2 / LS3xxx-2	2
LPBC33	LD3xxx-3 / LS3xxx-3	3
LPBC41	LD4xxx-1 / LS4xxx-1	1
LPBC42	LD4xxx-2 / LS4xxx-2	2
LPBC43	LD4xxx-3 / LS4xxx-3	3
LPBC51	LD5xxx-1 / LS5xxx-1	1
LPBC52	LD5xxx-2 / LS5xxx-2	2
LPBC53	LD5xxx-3 / LS5xxx-3	3

Note: For installation of optional clear plastic covers, use the screws provided with each cover.

© 2012 Littelfuse POWR-GARD® Products

POWR-BLOKS™

Distribution Block Selection Guide

AMP RATING PER POLE	POLES	CONNECTOR MATERIAL	LINE CONNECTION				LOAD CONNECTION				DRAWING	CATALOG/ ORDERING NUMBER
			CONNECTOR	OPENINGS PER POLE	LUG TYPE	WIRE RANGE	CONNECTOR	OPENINGS PER POLE	LUG TYPE	WIRE RANGE		
115	1	AL		1	Slotted	#2 - #14		4	Slotted	#10 - #18	2	0LD14001Z
115	2			1	Slotted	#2 - #14		4	Slotted	#10 - #18	2	0LD14002Z
115	3			1	5/32" Hex	#2 - #14		4	5/64" Hex	#10 - #18	2	LFD14003Z
115	4			1	Slotted	#2 - #14		4	Slotted	#10 - #18	2	0LD14004Z
175	2	AL		1	5/16" Hex	2/0 - #14		6	Slotted	#4 - #14	1	0LD04012Z
175	3			1	3/16" Hex	2/0 - #14		6	1/8" Hex	#4 - #14	1	LFD04013Z
175	2	AL		1	5/16" Hex	2/0 - #14		4	Slotted	#4 - #14	1	0LD04022Z
175	3			1	5/16" Hex	2/0 - #14		4	Slotted	#4 - #14	1	0LD04023Z
310	2	AL		1	5/16" Hex	350mcm - #6		6	Slotted	#4 - #14	1	0LD04042Z
310	3			1	5/16" Hex	350mcm - #6		6	Slotted	#4 - #14	1	0LD04043Z
175	1	AL		1	5/16" Hex	2/0 - #14		4	1/8" Hex	#4 - #14	3	0LD25701Z
175	2			1	3/16" Hex	2/0 - #14		4	1/8" Hex	#4 - #14	3	LFD25702Z
175	3			1	3/16" Hex	2/0 - #14		4	1/8" Hex	#4 - #14	3	LFD25703Z
175	1	CU		1	3/16" Hex	2/0 - #14		4	Slotted	#4 - #14	3	0LD29701Z
175	2			1	3/16" Hex	2/0 - #14		4	Slotted	#4 - #14	3	0LD29702Z
175	3			1	3/16" Hex	2/0 - #14		4	Slotted	#4 - #14	3	0LD29703Z
335	1	AL		1	5/16" Hex	400mcm - #6		4	Slotted	#2 - #14	5	0LD35521Z
335	2			1	5/16" Hex	400mcm - #6		4	Slotted	#2 - #14	5	0LD35522Z
380	3			1	3/8" Hex	500mcm - #6		4	5/32" Hex	#2 - #14	5	LFD35523Z
335	1	AL		1	5/16" Hex	400mcm - #6		6	Slotted	#2 - #14	5	0LD35531Z
335	2			1	5/16" Hex	400mcm - #6		6	Slotted	#2 - #14	5	0LD35532Z
380	3			1	3/8" Hex	500mcm - #6		6	5/32" Hex	#2 - #14	5	LFD35533Z
350	1	AL		2	5/16" Hex	2/0 - #14		6	Slotted	#4 - #14	5	0LD35551Z
350	2			2	5/16" Hex	2/0 - #14		6	Slotted	#4 - #14	5	0LD35552Z
350	3			2	3/16" Hex	2/0 - #14		6	1/8" Hex	#4 - #14	5	LFD35553Z
380	1	CU		1	Slotted	500mcm - #4		6	5/32" Hex	#2 - #14	5	0LD39531Z
380	2			1	Slotted	500mcm - #4		6	5/32" Hex	#2 - #14	5	0LD39532Z
380	3			1	Slotted	500mcm - #4		6	5/32" Hex	#2 - #14	5	0LD39533Z
350	1	CU		2	Slotted	2/0 - #14		6	1/8" Hex	#4 - #14	5	0LD39551Z
350	2			2	Slotted	2/0 - #14		6	1/8" Hex	#4 - #14	5	0LD39552Z
350	3			2	Slotted	2/0 - #14		6	1/8" Hex	#4 - #14	5	0LD39553Z
380	1	AL		1	Slotted	500mcm - #4		6	Slotted	#2 - #14	6	0LD45511Z
380	2			1	Slotted	500mcm - #4		6	Slotted	#2 - #14	6	0LD45512Z
380	3			1	Slotted	500mcm - #4		6	Slotted	#2 - #14	6	0LD45513Z
335	1	AL		1	Slotted	400mcm - #6	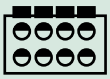	8	Slotted	#2 - #14	6	0LD45601Z
335	2			1	Slotted	400mcm - #6		8	Slotted	#2 - #14	6	0LD45602Z
335	3			1	Slotted	400mcm - #6		8	Slotted	#2 - #14	6	0LD45603Z
380	1	AL		1	Slotted	500mcm - #4	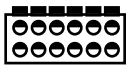	12	Slotted	#2 - #14	7	0LD55521Z
380	2			1	Slotted	500mcm - #4		12	Slotted	#2 - #14	7	0LD55522Z
380	3			1	3/8" Hex	500mcm - #4		12	5/32" Hex	#2 - #14	7	LFD55523Z
380	1	AL		1	3/8" Hex	500mcm - #4		6	5/16" Hex	2/0 - #14	7	0LD55791Z
380	2			1	3/8" Hex	500mcm - #4		6	5/16" Hex	2/0 - #14	7	0LD55792Z
380	3			1	3/8" Hex	500mcm - #4		6	3/16" Hex	2/0 - #14	7	LFD55793Z
760	1	AL		2	3/8" Hex	500mcm - #4	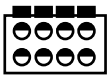	8	5/16" Hex	2/0 - #14	7	0LD55861Z
760	2			2	3/8" Hex	500mcm - #4		8	5/16" Hex	2/0 - #14	7	0LD55862Z
760	3			2	3/8" Hex	500mcm - #4		8	3/16" Hex	2/0 - #14	7	LFD55863Z
665	1	AL		1 1	3/8" Hex	500mcm - #4 350mcm - #6	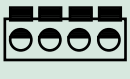	4	Slotted	2/0 - #14	7	0LD55871Z
665	2			1 1	3/8" Hex	500mcm - #4 350mcm - #6		4	Slotted	2/0 - #14	7	0LD55872Z
665	3			1 1	3/8" Hex	500mcm - #4 350mcm - #6		4	Slotted	2/0 - #14	7	0LD55873Z

Note: AL = Aluminum / CU = Copper

© 2012 Littelfuse POWR-GARD® Products

POWR-BLOKS™

Distribution Block Selection Guide

AMP RATING PER POLE	POLES	CONNECTOR MATERIAL	LINE CONNECTION				LOAD CONNECTION				DRAWING	CATALOG/ ORDERING NUMBER
			CONNECTOR	OPENINGS PER POLE	LUG TYPE	WIRE RANGE	CONNECTOR	OPENINGS PER POLE	LUG TYPE	WIRE RANGE		
760	1	AL		2	3/8" Hex	500mcm-#4	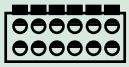	12	Slotted	#4 - #14	7	0LD55921Z
760	2			2	3/8" Hex	500mcm-#4		12	Slotted	#4 - #14	7	0LD55922Z
760	3			2	3/8" Hex	500mcm-#4		12	1/8" Hex	#4 - #14	7	LFD55923Z
380	1	AL		1	3/8" Hex	500mcm-#4	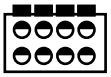	8	5/32" Hex	#2 - #14	7	0LD55941Z
380	2			1	3/8" Hex	500mcm-#4		8	5/32" Hex	#2 - #14	7	0LD55942Z
380	3			1	3/8" Hex	500mcm-#4		8	5/32" Hex	#2 - #14	7	0LD55943Z
760	1	CU		2	3/8" Hex	500mcm-#4	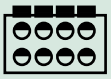	8	3/16" Hex	2/0 - #14	7	0LD59861Z
760	2			2	3/8" Hex	500mcm-#4		8	3/16" Hex	2/0 - #14	7	0LD59862Z
760	3			2	3/8" Hex	500mcm-#4		8	3/16" Hex	2/0 - #14	7	0LD59863Z
760	1	CU		2	3/8" Hex	500mcm-#4	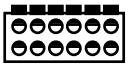	12	Slotted	#2 - #14	7	0LD59921Z
760	2			2	3/8" Hex	500mcm-#4		12	Slotted	#2 - #14	7	0LD59922Z
760	3			2	3/8" Hex	500mcm-#4		12	Slotted	#2 - #14	7	0LD59923Z
175	1	AL		1	3/16" Hex	2/0 - #14		4	1/8" Hex	#4 - #14	4	0LD25701ZXDIN
175	2			1	3/16" Hex	2/0 - #14		4	1/8" Hex	#4 - #14	4	0LD25702ZXDIN
175	3			1	3/16" Hex	2/0 - #14		4	1/8" Hex	#4 - #14	4	0LD25703ZXDIN
175	Adder			1	–	2/0 - #14		4	–	#4 - #14	4	0LD2570AZXDIN
175	1	AL		1	–	2/0 - #14	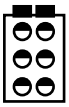	6	–	#4 - #14	4	0LD25801ZXDIN
175	2			1	5/16" Hex	2/0 - #14		6	Slotted	#4 - #14	4	0LD25802ZXDIN
175	3			1	5/16" Hex	2/0 - #14		6	Slotted	#4 - #14	4	0LD25803ZXDIN
175	Adder			1	–	2/0 - #14		6	–	#4 - #14	4	0LD2580AZXDIN
175	1	CU		1	3/16" Hex	2/0 - #14		4	Slotted	#4 - #14	4	0LD29701ZXDIN
175	2			1	3/16" Hex	2/0 - #14		4	Slotted	#4 - #14	4	0LD29702ZXDIN
175	3			1	3/16" Hex	2/0 - #14		4	Slotted	#4 - #14	4	0LD29703ZXDIN
175	Adder			1	–	2/0 - #14		4	–	#4 - #14	4	0LD2970AZXDIN

Note: AL = Aluminum / CU = Copper

Hinged Plastic Covers

Clear Plastic Covers

© 2012 Littelfuse POWR-GARD® Products

POWR-BLOKS™

Splicer Block Selection Guide

AMP RATING PER POLE	POLES	CONNECTOR MATERIAL	LINE CONNECTION				LOAD CONNECTION				DRAWING	CATALOG/ ORDERING NUMBER
			CONNECTOR	OPENINGS PER POLE	LUG TYPE	WIRE RANGE	CONNECTOR	OPENINGS PER POLE	LUG TYPE	WIRE RANGE		
310	2	AL		1	5/16" Hex	350mcm-#6		1	5/16" Hex	350mcm-#6	1	0LS03032Z
310	3			1	5/16" Hex	350mcm-#6		1	5/16" Hex	350mcm-#6	1	0LS03033Z
115	1	AL		1	Slotted	#2 - #14		1	Slotted	#2 - #14	2	0LS13001Z
115	2			1	Slotted	#2 - #14		1	Slotted	#2 - #14	2	0LS13002Z
115	3			1	5/32" Hex	#2 - #14		1	5/32" Hex	#2 - #14	2	LFS13003Z
115	4			1	Slotted	#2 - #14		1	Slotted	#2 - #14	2	0LS13004Z
150	1	CU		1	3/16" Hex	1/0 - #18		1	3/16" Hex	1/0 - #18	3	0LS21211Z
150	2			1	3/16" Hex	1/0 - #18		1	3/16" Hex	1/0 - #18	3	0LS21212Z
150	3			1	3/16" Hex	1/0 - #18		1	3/16" Hex	1/0 - #18	3	0LS21213Z
115	1	AL		1	Slotted	#2 - #14		1	Slotted	#2 - #14	3	0LS25521Z
115	2			1	Slotted	#2 - #14		1	Slotted	#2 - #14	3	0LS25522Z
115	3			1	Slotted	#2 - #14		1	Slotted	#2 - #14	3	0LS25523Z
175	1	AL		1	5/16" Hex	2/0 - #14		1	5/16" Hex	2/0 - #14	3	0LS25721Z
175	2			1	5/16" Hex	2/0 - #14		1	5/16" Hex	2/0 - #14	3	0LS25722Z
175	3			1	3/16" Hex	2/0 - #14		1	3/16" Hex	2/0 - #14	3	LFS25723Z
255	1	AL		1	5/16" Hex	250mcm-#6		1	5/16" Hex	250mcm-#6	5	0LS31231Z
255	2			1	5/16" Hex	250mcm-#6		1	5/16" Hex	250mcm-#6	5	0LS31232Z
255	3			1	5/16" Hex	250mcm-#6		1	5/16" Hex	250mcm-#6	5	0LS31233Z
255	1	CU		1	3/8" Hex	250mcm-#6		1	3/8" Hex	250mcm-#6	5	0LS31241Z
255	2			1	3/8" Hex	250mcm-#6		1	3/8" Hex	250mcm-#6	5	0LS31242Z
255	3			1	3/8" Hex	250mcm-#6		1	3/8" Hex	250mcm-#6	5	0LS31243Z
310	1	AL		1	5/16" Hex	350mcm-#6		1	5/16" Hex	350mcm-#6	5	0LS31261Z
310	2			1	5/16" Hex	350mcm-#6		1	5/16" Hex	350mcm-#6	5	0LS31262Z
310	3			1	5/16" Hex	350mcm-#6		1	5/16" Hex	350mcm-#6	5	0LS31263Z
420	1	AL		1	1/2" Hex	600mcm-#4		1	1/2" Hex	600mcm-#4	6	0LS45571Z
420	2			1	1/2" Hex	600mcm-#4		1	1/2" Hex	600mcm-#4	6	0LS45572Z
420	3			1	1/2" Hex	600mcm-#4		1	1/2" Hex	600mcm-#4	6	0LS45573Z
620	1	AL		2	5/16" Hex	350mcm-#4		2	5/16" Hex	350mcm-#4	7	0LS51291Z
620	2			2	5/16" Hex	350mcm-#4		2	5/16" Hex	350mcm-#4	7	0LS51292Z
620	3			2	5/16" Hex	350mcm-#4		2	5/16" Hex	350mcm-#4	7	0LS51293Z
760	1	AL		2	3/8" Hex	500mcm-#4		2	3/8" Hex	500mcm-#4	7	0LS53011Z
760	2			2	3/8" Hex	500mcm-#4		2	3/8" Hex	500mcm-#4	7	0LS53012Z
760	3			2	3/8" Hex	500mcm-#4		2	3/8" Hex	500mcm-#4	7	0LS53013Z
175	1	AL		1	5/16" Hex	2/0 - #14		1	5/16" Hex	2/0 - #14	4	0LS25721ZXDIN
175	2			1	5/16" Hex	2/0 - #14		1	5/16" Hex	2/0 - #14	4	0LS25722ZXDIN
175	3			1	5/16" Hex	2/0 - #14		1	5/16" Hex	2/0 - #14	4	0LS25723ZXDIN
175	Adder			1	–	2/0 - #14		1	–	2/0 - #14	4	0LS2572AZXDIN
175	1	CU		1	5/16" Hex	2/0 - #14		1	5/16" Hex	2/0 - #14	4	0LS29721ZXDIN
175	2			1	5/16" Hex	2/0 - #14		1	5/16" Hex	2/0 - #14	4	0LS29722ZXDIN
175	3			1	5/16" Hex	2/0 - #14		1	5/16" Hex	2/0 - #14	4	0LS29723ZXDIN
175	Adder			1	–	2/0 - #14		1	–	2/0 - #14	4	0LS2972AZXDIN

Note: AL = Aluminum / CU = Copper

© 2012 Littelfuse POWR-GARD® Products

POWR-BLOKS™

Distribution Block and Splicer Block Outline Drawings

Dimensions Inches (mm)

LX0XXX
Figure 1

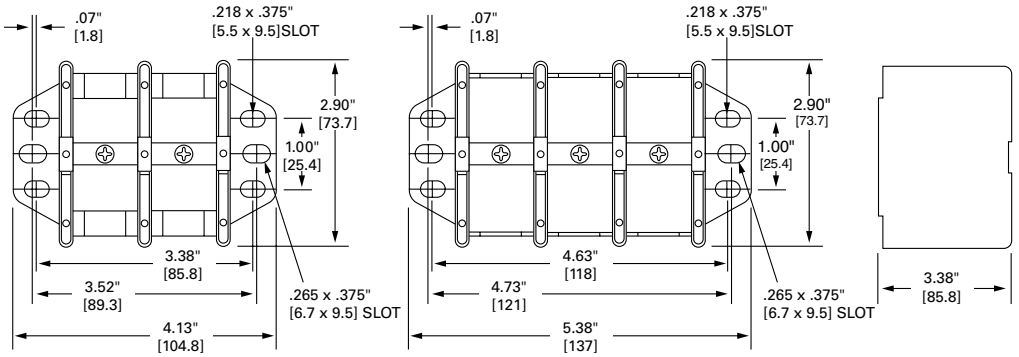

LX1XXX
Figure 2

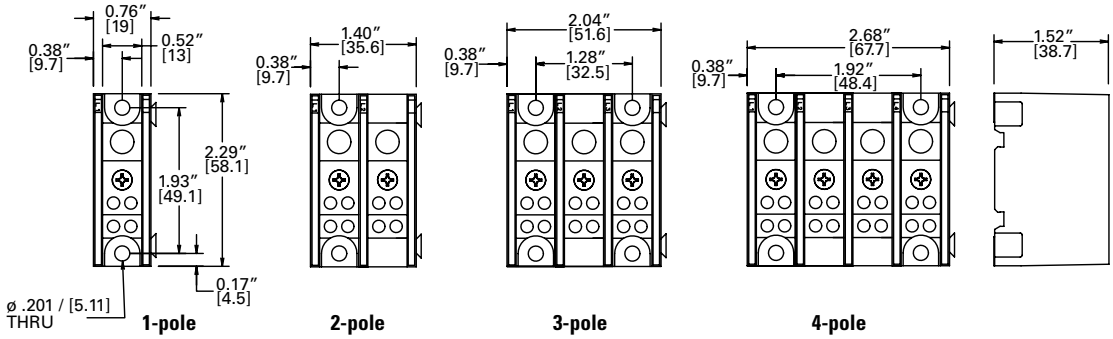

LX2XXX
Figure 3

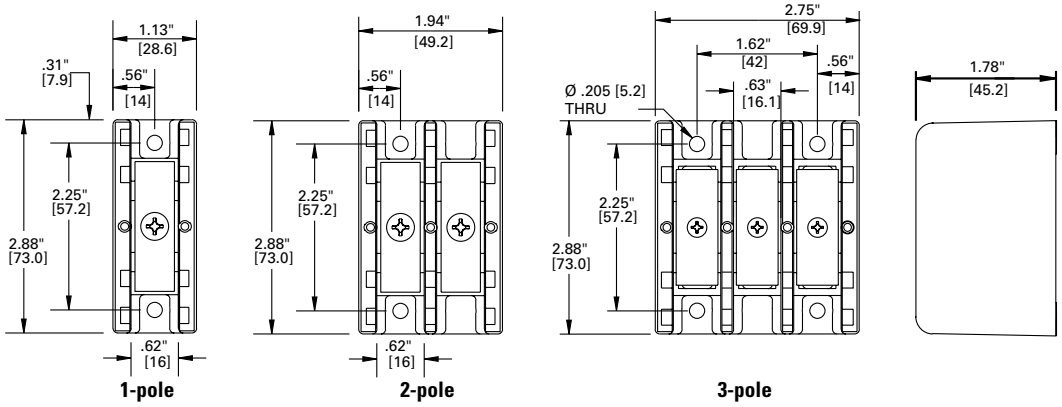

LX2XXX-XDIN
Figure 4

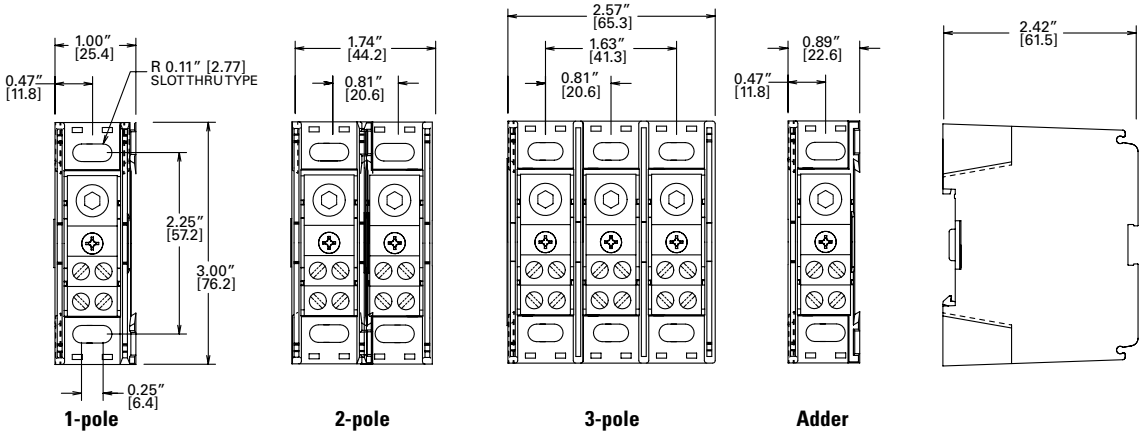

© 2012 Littelfuse POWR-GARD® Products

POWR-BLOKS™

Distribution Block and Splicer Block Outline Drawings

Dimensions Inches (mm)

LX3XXX
Figure 5

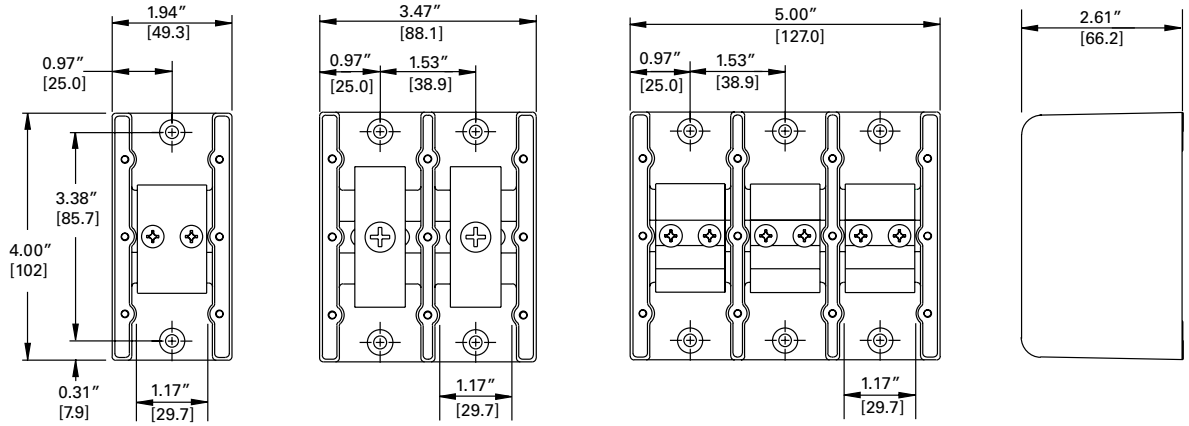

1-pole **2-pole** **3-pole**

LX4XXX
Figure 6

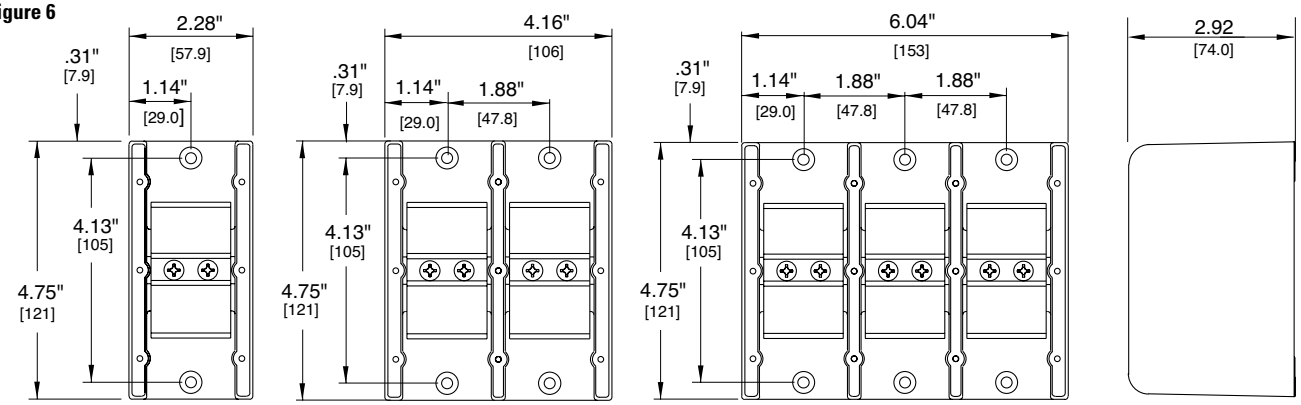

1-pole **2-pole** **3-pole**

LX5XXX
Figure 7

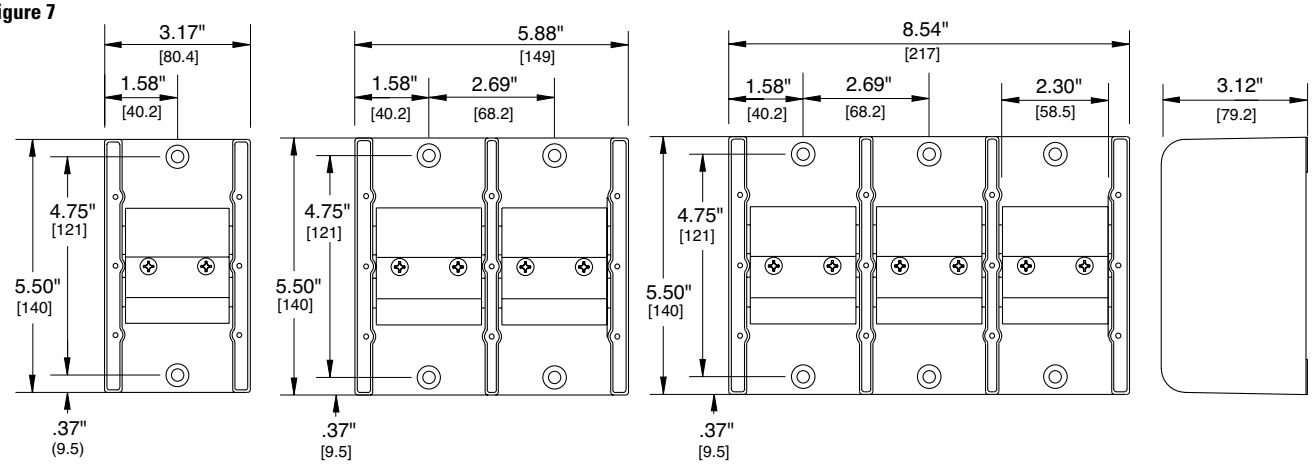

1-pole **2-pole** **3-pole**

© 2012 Littelfuse POWR-GARD® Products

Компания «ЭлектроПласт» предлагает заключение долгосрочных отношений при поставках импортных электронных компонентов на взаимовыгодных условиях!

Наши преимущества:

- Оперативные поставки широкого спектра электронных компонентов отечественного и импортного производства напрямую от производителей и с крупнейших мировых складов;
- Поставка более 17-ти миллионов наименований электронных компонентов;
- Поставка сложных, дефицитных, либо снятых с производства позиций;
- Оперативные сроки поставки под заказ (от 5 рабочих дней);
- Экспресс доставка в любую точку России;
- Техническая поддержка проекта, помощь в подборе аналогов, поставка прототипов;
- Система менеджмента качества сертифицирована по Международному стандарту ISO 9001;
- Лицензия ФСБ на осуществление работ с использованием сведений, составляющих государственную тайну;
- Поставка специализированных компонентов (Xilinx, Altera, Analog Devices, Intersil, Interpoint, Microsemi, Aeroflex, Peregrine, Syfer, Eurofarad, Texas Instrument, Miteq, Cobham, E2V, MA-COM, Hittite, Mini-Circuits,General Dynamics и др.);

Помимо этого, одним из направлений компании «ЭлектроПласт» является направление «Источники питания». Мы предлагаем Вам помощь Конструкторского отдела:

- Подбор оптимального решения, техническое обоснование при выборе компонента;
- Подбор аналогов;
- Консультации по применению компонента;
- Поставка образцов и прототипов;
- Техническая поддержка проекта;
- Защита от снятия компонента с производства.

Как с нами связаться

Телефон: 8 (812) 309 58 32 (многоканальный)
Факс: 8 (812) 320-02-42
Электронная почта: org@eplast1.ru
Адрес: 198099, г. Санкт-Петербург, ул. Калинина, дом 2, корпус 4, литера А.