COSEL DC-DC Converters PCB Mount Type

SUCW1R5

Ordering information

SUC W 1R5 12 12 B P -□

① ② ③ ④ ⑤ ⑥ ⑦ ⑧

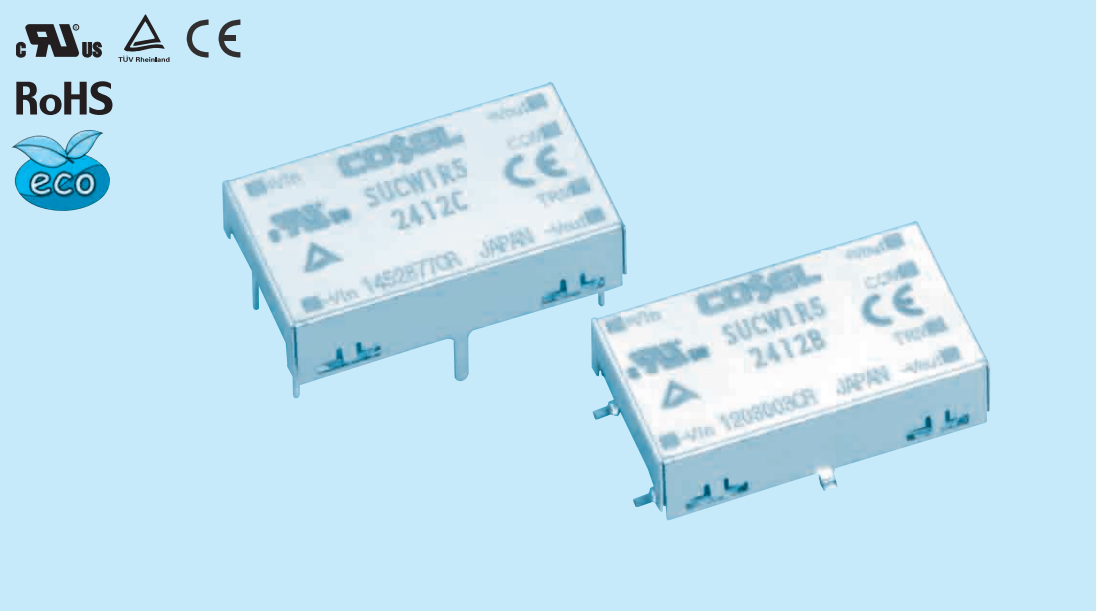

①Series name
②Dual output
③Output wattage
④Input voltage
⑤Output voltage
⑥Mounting type
B :SMD
C :DIP
⑦Packing form
Blank:Plastic cover
P :Tray (SMD type)
⑧Optional
C :with coating (only DIP type)*

* Safety standards are pending

MODEL		SUCW1R50512	SUCW1R50515	SUCW1R51212	SUCW1R51215	SUCW1R52412	SUCW1R52415	SUCW1R54812	SUCW1R54815
MAX OUTPUT WATTAGE[W]		1.56	1.5	1.56	1.5	1.56	1.5	1.56	1.5
DC OUTPUT	VOLTAGE[V] *1	±12 or +24	±15 or +30	±12 or +24	±15 or +30	±12 or +24	±15 or +30	±12 or +24	±15 or +30
	CURRENT[A]	0.065	0.05	0.065	0.05	0.065	0.05	0.065	0.05

SPECIFICATIONS

	MODEL		SUCW1R50512	SUCW1R50515	SUCW1R51212	SUCW1R51215	SUCW1R52412	SUCW1R52415	SUCW1R54812	SUCW1R54815
INPUT	VOLTAGE[V]		DC4.5 - 9		DC9 - 18		DC18 - 36		DC36 - 76	
	CURRENT[A]	*2	0.446typ	0.429typ	0.178typ	0.171typ	0.089typ	0.086typ	0.045typ	0.043typ
	EFFICIENCY[%]	*2	70typ	70typ	73typ	73typ	73typ	73typ	73typ	73typ
OUTPUT	VOLTAGE[V]		±12(+24)	±15(+30)	±12(+24)	±15(+30)	±12(+24)	±15(+30)	±12(+24)	±15(+30)
	CURRENT[A]		0.065	0.05	0.065	0.05	0.065	0.05	0.065	0.05
	LINE REGULATION[mV]		60max	75max	60max	75max	60max	75max	60max	75max
	LOAD REGULATION[mV]		600max	750max	600max	750max	600max	750max	600max	750max
	RIPPLE[mVp-p]	-20 to +55℃ *3	120max	120max	120max	120max	120max	120max	120max	120max
		-40 to -20℃ *3	150max	150max	150max	150max	150max	150max	150max	150max
	RIPPLE NOISE[mVp-p]	-20 to +55℃ *3	150max	150max	150max	150max	150max	150max	150max	150max
		-40 to -20℃ *3	200max	200max	200max	200max	200max	200max	200max	200max
	TEMPERATURE REGULATION[mV]	-20 to +55℃	150max	180max	150max	180max	150max	180max	150max	180max
		-40 to +55℃	240max	290max	240max	290max	240max	290max	240max	290max
	DRIFT[mV]	*4	50max	60max	50max	60max	50max	60max	50max	60max
	START-UP TIME[ms]		20max (Minimum input, Io=100%)							
	OUTPUT VOLTAGE ADJUSTMENT RANGE		Fixed (TRM pin open) ±5% adjustable by external VR							
	OUTPUT VOLTAGE SETTING[V] (±5%)		11.40 - 12.60	14.25 - 15.75	11.40 - 12.60	14.25 - 15.75	11.40 - 12.60	14.25 - 15.75	11.40 - 12.60	14.25 - 15.75
PROTECTION CIRCUIT AND OTHERS	OVERCURRENT PROTECTION		Works over 105% of rating and recovers automatically							
ISOLATION	INPUT-OUTPUT		AC500V 1minute, Cutoff current = 10mA, DC500V 50MΩ min (20±15℃)							
	INPUT-CASE		AC500V 1minute, Cutoff current = 10mA, DC500V 50MΩ min (20±15℃)							
	OUTPUT-CASE		AC500V 1minute, Cutoff current = 10mA, DC500V 50MΩ min (20±15℃)							
ENVIRONMENT	OPERATING TEMP.,HUMID.AND ALTITUDE		-40 to +85℃, 20 - 95%RH (Non condensing) (Required Derating), 3,000m (10,000feet) max							
	STORAGE TEMP.,HUMID.AND ALTITUDE		-40 to +100℃, 20 - 95%RH (Non condensing), 9,000m (30,000feet) max							
	VIBRATION		10 - 55Hz, 98.0m/s² (10G), 3minutes period, 60minutes each along X, Y and Z axis							
	IMPACT		490.3m/s² (50G), 11ms, once each along X, Y and Z axis							
SAFETY	AGENCY APPROVALS		UL60950-1, C-UL, EN60950-1							
OTHERS	CASE SIZE/WEIGHT		22.4×7.0×13.2mm [0.88×0.28×0.52 inches] (W×H×D) / 3g max							
	COOLING METHOD		Convection/Forced air							

*1 Output pins can be connected in series to make a 24V/30V output.
*2 Rated input 5V, 12V, 24V or 48V DC Io=100%
*3 Ripple and Ripple Noise is measured by using measuring board with capacitor with in 25mm from output pin terminals.
*4 Drift is the change in DC output for an eight hour period after a half-hour warm-up at 25℃.
* Parallel operation with other model is not possible.

External view

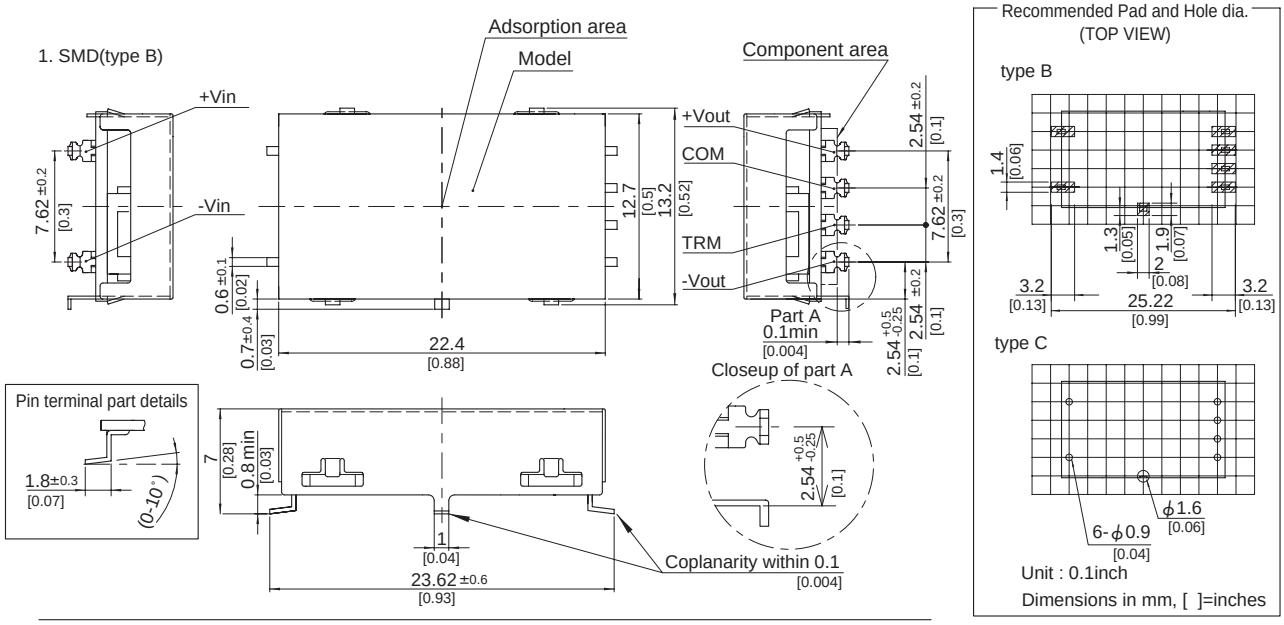

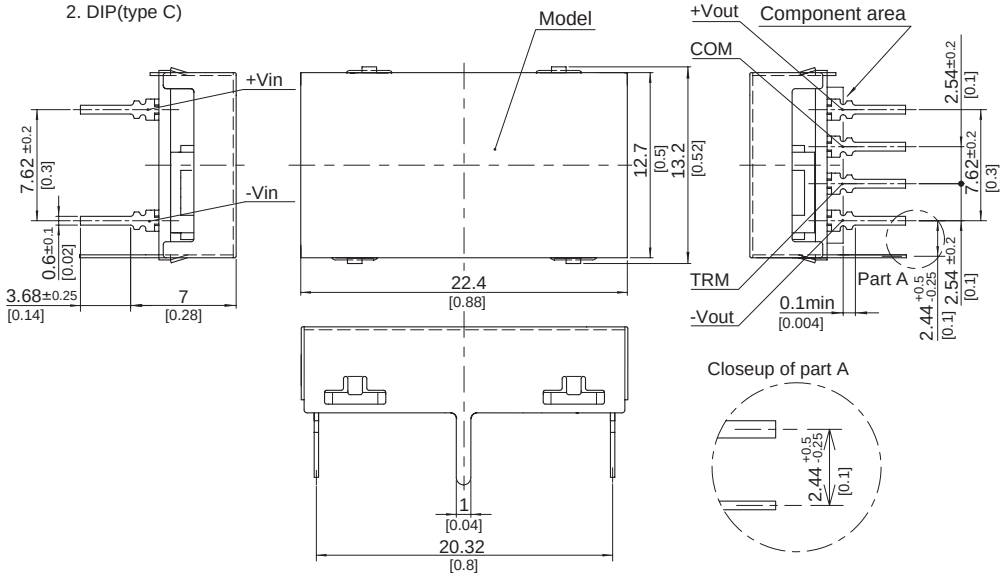

※ Tolerance ±0.5 [±0.02]
※ Dimensions in mm, [ ]=inches
※ Pin terminal thickness : 0.3±0.1 [0.012]
※ Pin terminal material : Copper alloy
※ Plating treatment of terminal : Lead free plating
※ Case thickness : 0.2±0.05 [0.008]
※ Case material : Brass
※ Plating treatment of case : Nickel plating
※ Please keep enough creepage distance with the pattern on PCB and other components.
※ Weight : 3g max

COSEL DC-DC Converters PCB Mount Type

SUCW3

Ordering information

SUC	W	3	12	12	B	P	-□
①	②	③	④	⑤	⑥	⑦	⑧

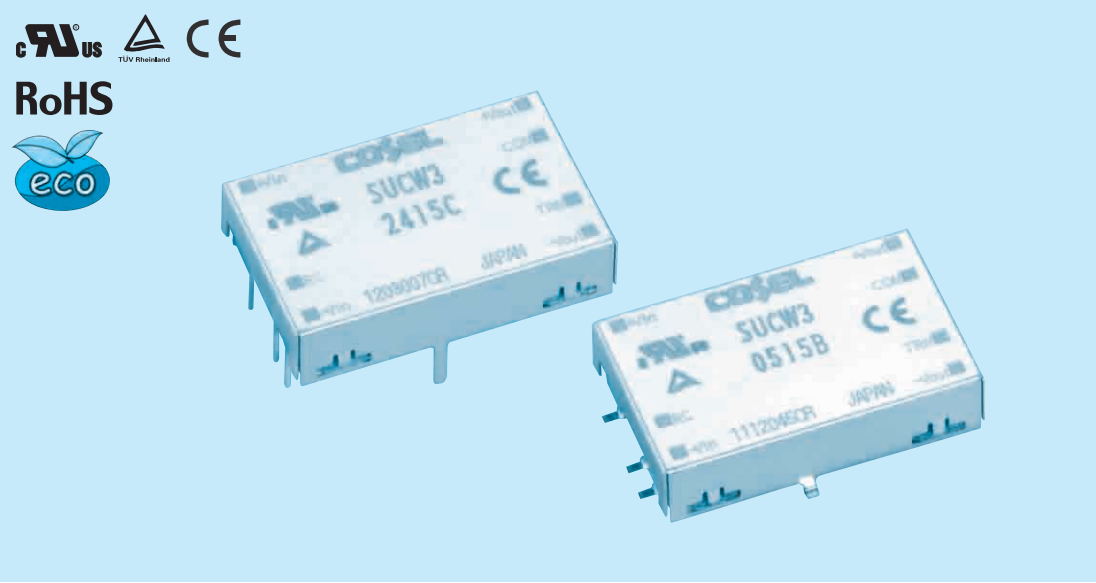

①Series name
②Dual output
③Output wattage
④Input voltage
⑤Output voltage
⑥Mounting type
B :SMD
C :DIP
⑦Packing form
Blank:Plastic cover
P :Tray (SMD type)
⑧Optional
G :Capacitor between Input and Output is removed.
C :with coating (only DIP type)*

* Safety standards are pending

SU·SUC/SUT

MODEL		SUCW30512	SUCW30515	SUCW31212	SUCW31215	SUCW32412	SUCW32415	SUCW34812	SUCW34815
MAX OUTPUT WATTAGE[W]		3.12	3	3.12	3	3.12	3	3.12	3
DC OUTPUT	VOLTAGE[V] *1	±12 or +24	±15 or +30	±12 or +24	±15 or +30	±12 or +24	±15 or +30	±12 or +24	±15 or +30
	CURRENT[A]	0.13	0.1	0.13	0.1	0.13	0.1	0.13	0.1

SPECIFICATIONS

	MODEL		SUCW30512	SUCW30515	SUCW31212	SUCW31215	SUCW32412	SUCW32415	SUCW34812	SUCW34815
INPUT	VOLTAGE[V]		DC4.5 - 9		DC9 - 18		DC18 - 36		DC36 - 76	
	CURRENT[A]	*2	0.844typ	0.811typ	0.343typ	0.329typ	0.172typ	0.165typ	0.086typ	0.083typ
	EFFICIENCY[%]	*2	74typ	74typ	76typ	76typ	76typ	76typ	76typ	76typ
OUTPUT	VOLTAGE[V]		±12(+24)	±15(+30)	±12(+24)	±15(+30)	±12(+24)	±15(+30)	±12(+24)	±15(+30)
	CURRENT[A]		0.13	0.1	0.13	0.1	0.13	0.1	0.13	0.1
	LINE REGULATION[mV]		60max	75max	60max	75max	60max	75max	60max	75max
	LOAD REGULATION[mV]		600max	750max	600max	750max	600max	750max	600max	750max
	RIPPLE[mVp-p]	-20 to +55℃ *3	120max	120max	120max	120max	120max	120max	120max	120max
		-40 to -20℃ *3	150max	150max	150max	150max	150max	150max	150max	150max
	RIPPLE NOISE[mVp-p]	-20 to +55℃ *3	150max	150max	150max	150max	150max	150max	150max	150max
		-40 to -20℃ *3	200max	200max	200max	200max	200max	200max	200max	200max
	TEMPERATURE REGULATION[mV]	-20 to +55℃	150max	180max	150max	180max	150max	180max	150max	180max
		-40 to +55℃	240max	290max	240max	290max	240max	290max	240max	290max
	DRIFT[mV]	*4	50max	60max	50max	60max	50max	60max	50max	60max
	START-UP TIME[ms]		20max (Minimum input, Io=100%)							
	OUTPUT VOLTAGE ADJUSTMENT RANGE		Fixed (TRM pin open) ±5% adjustable by external VR							
	OUTPUT VOLTAGE SETTING[V] (±5%)		11.40 - 12.60	14.25 - 15.75	11.40 - 12.60	14.25 - 15.75	11.40 - 12.60	14.25 - 15.75	11.40 - 12.60	14.25 - 15.75
PROTECTION CIRCUIT AND OTHERS	OVERCURRENT PROTECTION		Works over 105% of rating and recovers automatically							
	REMOTE ON/OFF		Provided (Negative logic L : ON, H : OFF)							
ISOLATION	INPUT-OUTPUT		AC500V 1minute, Cutoff current = 10mA, DC500V 50MΩ min (20±15℃)							
	INPUT-CASE		AC500V 1minute, Cutoff current = 10mA, DC500V 50MΩ min (20±15℃)							
	OUTPUT-CASE		AC500V 1minute, Cutoff current = 10mA, DC500V 50MΩ min (20±15℃)							
ENVIRONMENT	OPERATING TEMP.,HUMID.AND ALTITUDE		-40 to +85℃, 20 - 95%RH (Non condensing) (Required Derating), 3,000m (10,000feet) max							
	STORAGE TEMP.,HUMID.AND ALTITUDE		-40 to +100℃, 20 - 95%RH (Non condensing), 9,000m (30,000feet) max							
	VIBRATION		10 - 55Hz, 98.0m/s^2 (10G), 3minutes period, 60minutes each along X, Y and Z axis							
	IMPACT		490.3m/s^2 (50G), 11ms, once each along X, Y and Z axis							
SAFETY	AGENCY APPROVALS		UL60950-1, C-UL, EN60950-1							
OTHERS	CASE SIZE/WEIGHT		25×7.0×16.1mm [0.98×0.28×0.63 inches] (W×H×D) / 5g max							
	COOLING METHOD		Convection/Forced air							

*1 Output pins can be connected in series to make a 24V/30V output.
*2 Rated input 5V, 12V, 24V or 48V DC Io=100%
*3 Ripple and Ripple Noise is measured by using measuring board with capacitor with in 25mm from output pin terminals.
*4 Drift is the change in DC output for an eight hour period after a half-hour warm-up at 25℃.
* Parallel operation with other model is not possible.

External view

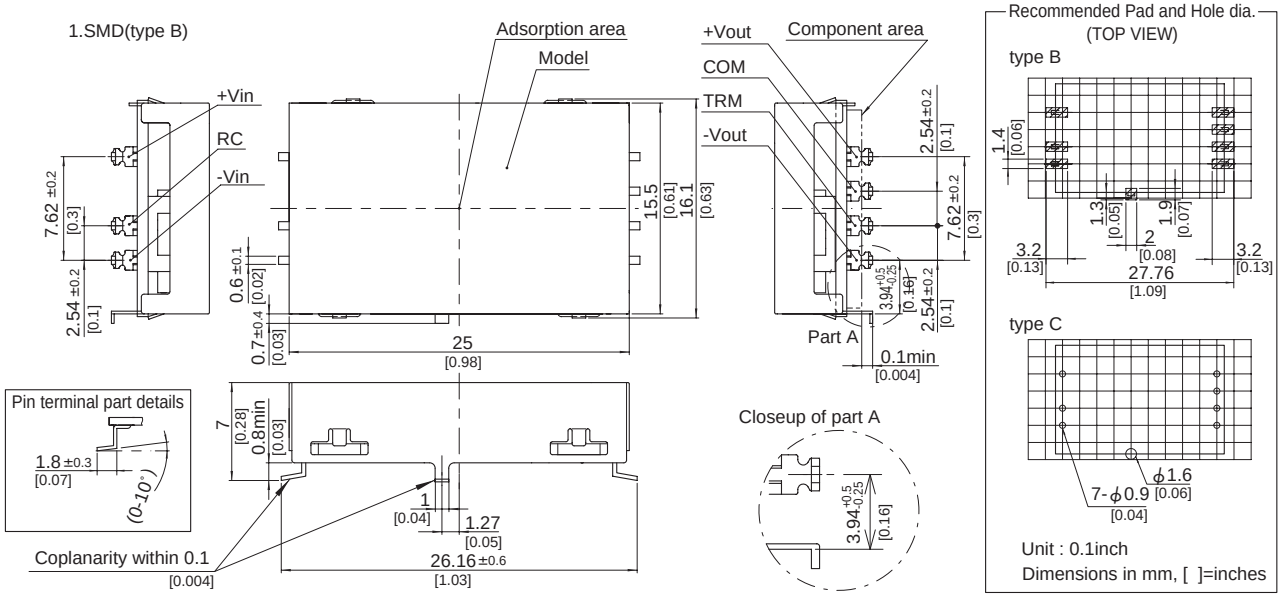

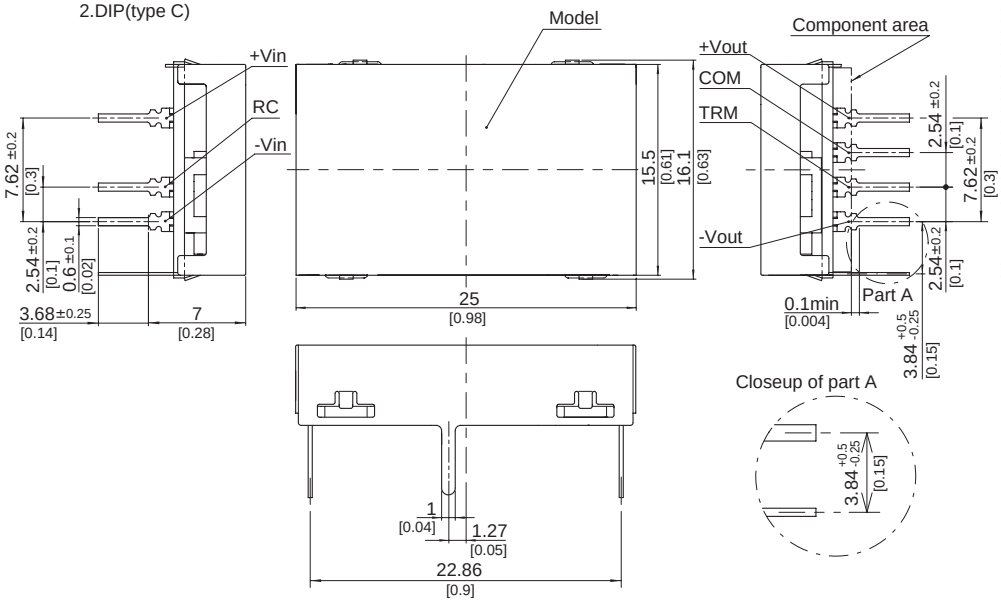

※ Tolerance ±0.5 [±0.02]
※ Dimensions in mm, [ ]=inches
※ Pin terminal thickness : 0.3±0.1 [0.012]
※ Pin terminal material : Copper alloy
※ Plating treatment of terminal : Lead free plating
※ Case thickness : 0.2±0.05 [0.008]
※ Case material : Brass
※ Plating treatment of case : Nickel plating
※ Please keep enough creepage distance with the pattern on PCB and other components.
※ Weight : 5g max

COSEL DC-DC Converters PCB Mount Type

SUCW6

Ordering information

SUC W 6 12 12 B P -□

① ② ③ ④ ⑤ ⑥ ⑦ ⑧

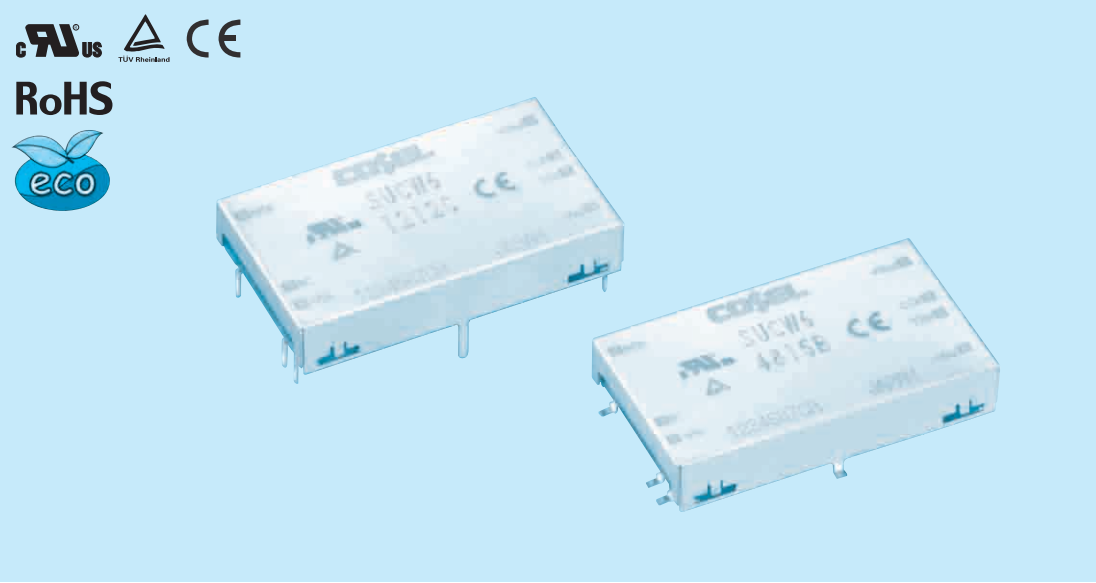

①Series name
②Dual output
③Output wattage
④Input voltage
⑤Output voltage
⑥Mounting type
B :SMD
C :DIP
⑦Packing form
Blank:Plastic cover
P :Tray (SMD type)
⑧Optional
G :Capacitor between Input and Output is removed.
C :with coating (only DIP type)*

* Safety standards are pending

SU·SUC/SUT

MODEL		SUCW60512	SUCW60515	SUCW61212	SUCW61215	SUCW62412	SUCW62415	SUCW64812	SUCW64815
MAX OUTPUT WATTAGE[W]		6	6	6	6	6	6	6	6
DC OUTPUT	VOLTAGE[V] *1	±12 or +24	±15 or +30	±12 or +24	±15 or +30	±12 or +24	±15 or +30	±12 or +24	±15 or +30
	CURRENT[A]	0.25	0.2	0.25	0.2	0.25	0.2	0.25	0.2

SPECIFICATIONS

	MODEL		SUCW60512	SUCW60515	SUCW61212	SUCW61215	SUCW62412	SUCW62415	SUCW64812	SUCW64815
INPUT	VOLTAGE[V]		DC4.5 - 9		DC9 - 18		DC18 - 36		DC36 - 76	
	CURRENT[A]	*2	1.538typ	1.538typ	0.588typ	0.588typ	0.291typ	0.291typ	0.145typ	0.145typ
	EFFICIENCY[%]	*2	78typ	78typ	85typ	85typ	86typ	86typ	86typ	86typ
OUTPUT	VOLTAGE[V]		±12(+24)	±15(+30)	±12(+24)	±15(+30)	±12(+24)	±15(+30)	±12(+24)	±15(+30)
	CURRENT[A]		0.25	0.2	0.25	0.2	0.25	0.2	0.25	0.2
	LINE REGULATION[mV]		60max	75max	60max	75max	60max	75max	60max	75max
	LOAD REGULATION[mV]		600max	750max	600max	750max	600max	750max	600max	750max
	RIPPLE[mVp-p]	-20 to +55℃ *3	120max	120max	120max	120max	120max	120max	120max	120max
		-40 to -20℃ *3	150max	150max	150max	150max	150max	150max	150max	150max
	RIPPLE NOISE[mVp-p]	-20 to +55℃ *3	150max	150max	150max	150max	150max	150max	150max	150max
		-40 to -20℃ *3	200max	200max	200max	200max	200max	200max	200max	200max
	TEMPERATURE REGULATION[mV]	-20 to +55℃	150max	180max	150max	180max	150max	180max	150max	180max
		-40 to +55℃	240max	290max	240max	290max	240max	290max	240max	290max
	DRIFT[mV]	*4	50max	60max	50max	60max	50max	60max	50max	60max
	START-UP TIME[ms]		20max (Minimum input, Io=100%)							
	OUTPUT VOLTAGE ADJUSTMENT RANGE		Fixed (TRM pin open) ±5% adjustable by external VR							
	OUTPUT VOLTAGE SETTING[V] (±5%)		11.40 - 12.60	14.25 - 15.75	11.40 - 12.60	14.25 - 15.75	11.40 - 12.60	14.25 - 15.75	11.40 - 12.60	14.25 - 15.75
PROTECTION CIRCUIT AND OTHERS	OVERCURRENT PROTECTION		Works over 105% of rating and recovers automatically							
	REMOTE ON/OFF		Provided (Negative logic L : ON, H : OFF)							
ISOLATION	INPUT-OUTPUT		AC500V 1minute, Cutoff current = 10mA, DC500V 50MΩ min (20±15℃)							
	INPUT-CASE		AC500V 1minute, Cutoff current = 10mA, DC500V 50MΩ min (20±15℃)							
	OUTPUT-CASE		AC500V 1minute, Cutoff current = 10mA, DC500V 50MΩ min (20±15℃)							
ENVIRONMENT	OPERATING TEMP.,HUMID.AND ALTITUDE		-40 to +85℃, 20 - 95%RH (Non condensing) (Required Derating), 3,000m (10,000feet) max							
	STORAGE TEMP.,HUMID.AND ALTITUDE		-40 to +100℃, 20 - 95%RH (Non condensing), 9,000m (30,000feet) max							
	VIBRATION		10 - 55Hz, 98.0m/s^2 (10G), 3minutes period, 60minutes each along X, Y and Z axis							
	IMPACT		490.3m/s^2 (50G), 11ms, once each along X, Y and Z axis							
SAFETY	AGENCY APPROVALS		UL60950-1, C-UL, EN60950-1							
OTHERS	CASE SIZE/WEIGHT		32.6×7.0×19.1mm [1.28×0.28×0.75 inches] (W×H×D) / 7g max							
	COOLING METHOD		Convection/Forced air							

*1 Output pins can be connected in series to make a 24V/30V output.
*2 Rated input 5V, 12V, 24V or 48V DC Io=100%
*3 Ripple and Ripple Noise is measured by using measuring board with capacitor with in 25mm from output pin terminals.
*4 Drift is the change in DC output for an eight hour period after a half-hour warm-up at 25℃.
* Parallel operation with other model is not possible.

External view

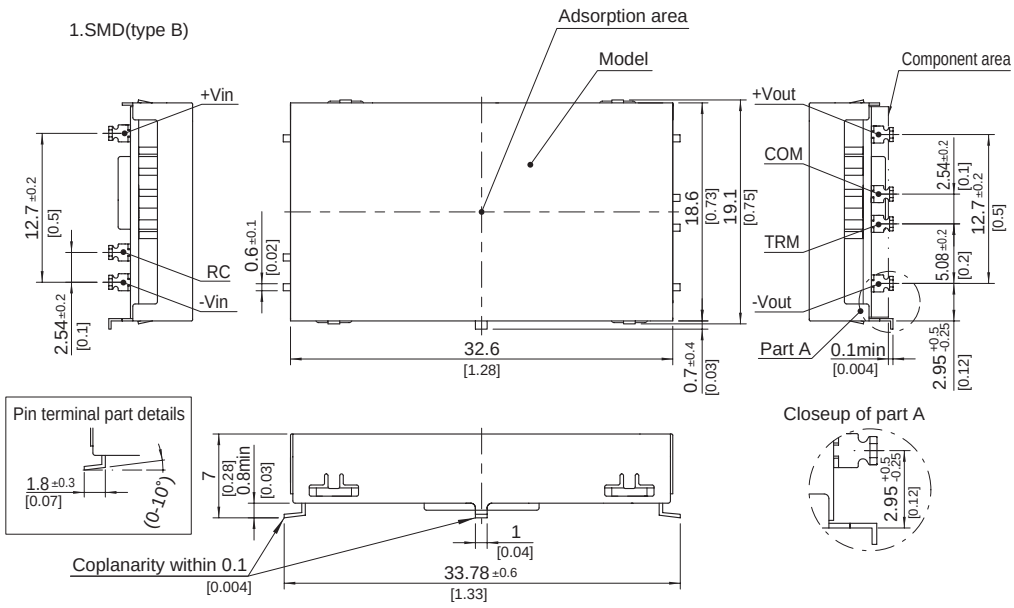

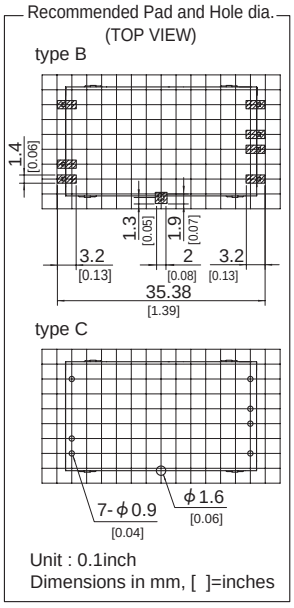

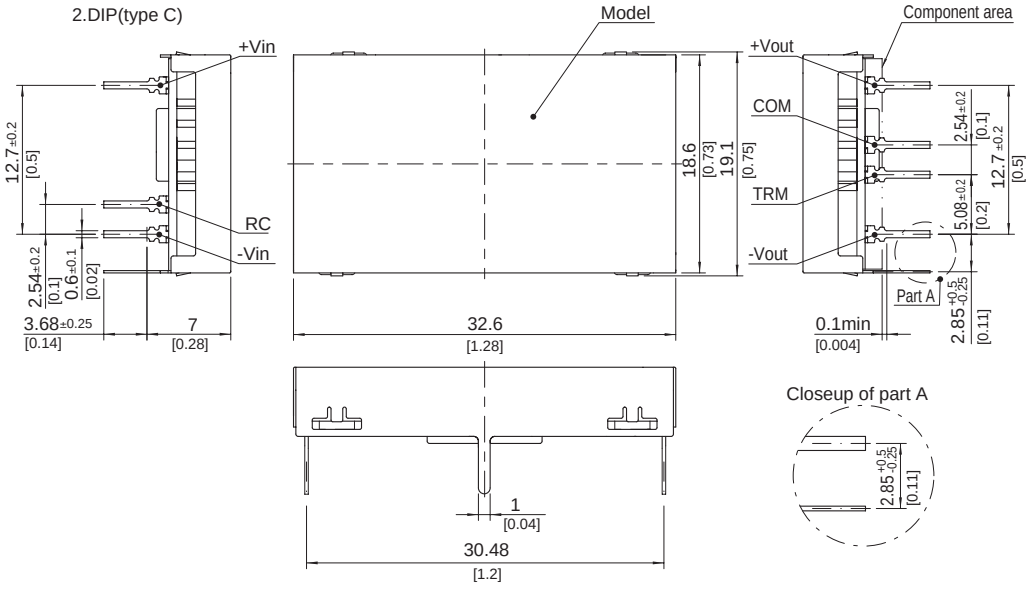

※ Tolerance ±0.5 [±0.02]
※ Dimensions in mm, [ ]=inches
※ Pin terminal thickness : 0.3±0.1 [0.012]
※ Pin terminal material : Copper alloy
※ Plating treatment of terminal : Lead free plating
※ Case thickness : 0.2±0.05 [0.008]
※ Case material : Brass
※ Plating treatment of case : Nickel plating
※ Please keep enough creepage distance with the pattern on PCB and other components.
※ Weight : 7g max

COSEL DC-DC Converters PCB Mount Type

SUCW10

Ordering information

SUC	W	10	12	12	B	P	-□
①	②	③	④	⑤	⑥	⑦	⑧

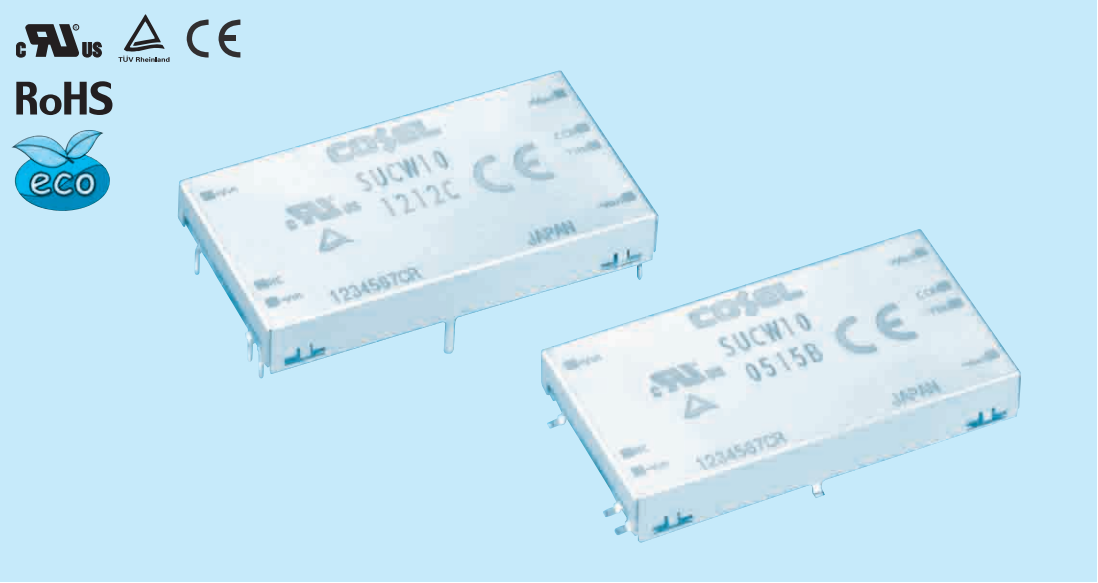

①Series name
②Dual output
③Output wattage
④Input voltage
⑤Output voltage
⑥Mounting type
B :SMD
C :DIP
⑦Packing form
Blank:Plastic cover
P :Tray(SMD type)
⑧Optional
G :Capacitor between Input and Output is removed.
C :with coating (only DIP type)＊

＊ Safety standards are pending

SU·SUC/SUT

MODEL		SUCW100512	SUCW100515	SUCW101212	SUCW101215	SUCW102412	SUCW102415	SUCW104812	SUCW104815
MAX OUTPUT WATTAGE[W]		10.8	10.5	10.8	10.5	10.8	10.5	10.8	10.5
DC OUTPUT	VOLTAGE[V] ＊1	±12 or +24	±15 or +30	±12 or +24	±15 or +30	±12 or +24	±15 or +30	±12 or +24	±15 or +30
	CURRENT[A]	0.45	0.35	0.45	0.35	0.45	0.35	0.45	0.35

SPECIFICATIONS

	MODEL		SUCW100512	SUCW100515	SUCW101212	SUCW101215	SUCW102412	SUCW102415	SUCW104812	SUCW104815
INPUT	VOLTAGE[V]		DC4.5 - 9		DC9 - 18		DC18 - 36		DC36 - 76	
	CURRENT[A]	＊2	2.51typ	2.44typ	1.05typ	1.02typ	0.523typ	0.509typ	0.262typ	0.254typ
	EFFICIENCY[%]	＊2	86typ	86typ	86typ	86typ	86typ	86typ	86typ	86typ
OUTPUT	VOLTAGE[V]		±12(+24)	±15(+30)	±12(+24)	±15(+30)	±12(+24)	±15(+30)	±12(+24)	±15(+30)
	CURRENT[A]		0.45	0.35	0.45	0.35	0.45	0.35	0.45	0.35
	LINE REGULATION[mV]		60max	75max	60max	75max	60max	75max	60max	75max
	LOAD REGULATION[mV]		600max	750max	600max	750max	600max	750max	600max	750max
	RIPPLE[mVp-p]	-20 to +55℃ ＊3	120max	120max	120max	120max	120max	120max	120max	120max
		-40 to -20℃ ＊3	150max	150max	150max	150max	150max	150max	150max	150max
	RIPPLE NOISE[mVp-p]	-20 to +55℃ ＊3	150max	150max	150max	150max	150max	150max	150max	150max
		-40 to -20℃ ＊3	200max	200max	200max	200max	200max	200max	200max	200max
	TEMPERATURE REGULATION[mV]	-20 to +55℃	150max	180max	150max	180max	150max	180max	150max	180max
		-40 to +55℃	240max	290max	240max	290max	240max	290max	240max	290max
	DRIFT[mV]	＊4	50max	60max	50max	60max	50max	60max	50max	60max
	START-UP TIME[ms]		20max (Minimum input, Io=100%)							
	OUTPUT VOLTAGE ADJUSTMENT RANGE		Fixed (TRM pin open) ±5% adjustable by external VR							
	OUTPUT VOLTAGE SETTING[V] (±5%)		11.40 - 12.60	14.25 - 15.75	11.40 - 12.60	14.25 - 15.75	11.40 - 12.60	14.25 - 15.75	11.40 - 12.60	14.25 - 15.75
PROTECTION CIRCUIT AND OTHERS	OVERCURRENT PROTECTION		Works over 105% of rating and recovers automatically							
	REMOTE ON/OFF		Provided (Negative logic L : ON, H : OFF)							
ISOLATION	INPUT-OUTPUT		AC500V 1minute, Cutoff current = 10mA, DC500V 50MΩ min (20±15℃)							
	INPUT-CASE		AC500V 1minute, Cutoff current = 10mA, DC500V 50MΩ min (20±15℃)							
	OUTPUT-CASE		AC500V 1minute, Cutoff current = 10mA, DC500V 50MΩ min (20±15℃)							
ENVIRONMENT	OPERATING TEMP.,HUMID.AND ALTITUDE		-40 to +85℃, 20 - 95%RH (Non condensing) (Required Derating), 3,000m (10,000feet) max							
	STORAGE TEMP.,HUMID.AND ALTITUDE		-40 to +100℃, 20 - 95%RH (Non condensing), 9,000m (30,000feet) max							
	VIBRATION		10 - 55Hz, 98.0m/s^2 (10G), 3minutes period, 60minutes each along X, Y and Z axis							
	IMPACT		490.3m/s^2 (50G), 11ms, once each along X, Y and Z axis							
SAFETY	AGENCY APPROVALS		UL60950-1, C-UL, EN60950-1							
OTHERS	CASE SIZE/WEIGHT		40.2×7.0×22.0mm [1.58×0.28×0.87 inches] (W×H×D) / 10g max							
	COOLING METHOD		Convection/Forced air							

＊1 Output pins can be connected in series to make a 24V/30V output.
＊2 Rated input 5V, 12V, 24V or 48V DC Io=100%
＊3 Ripple and Ripple Noise is measured by using measuring board with capacitor with in 25mm from output pin terminals.
＊4 Drift is the change in DC output for an eight hour period after a half-hour warm-up at 25℃.
＊ Parallel operation with other model is not possible.

External view

1.SMD(type B)

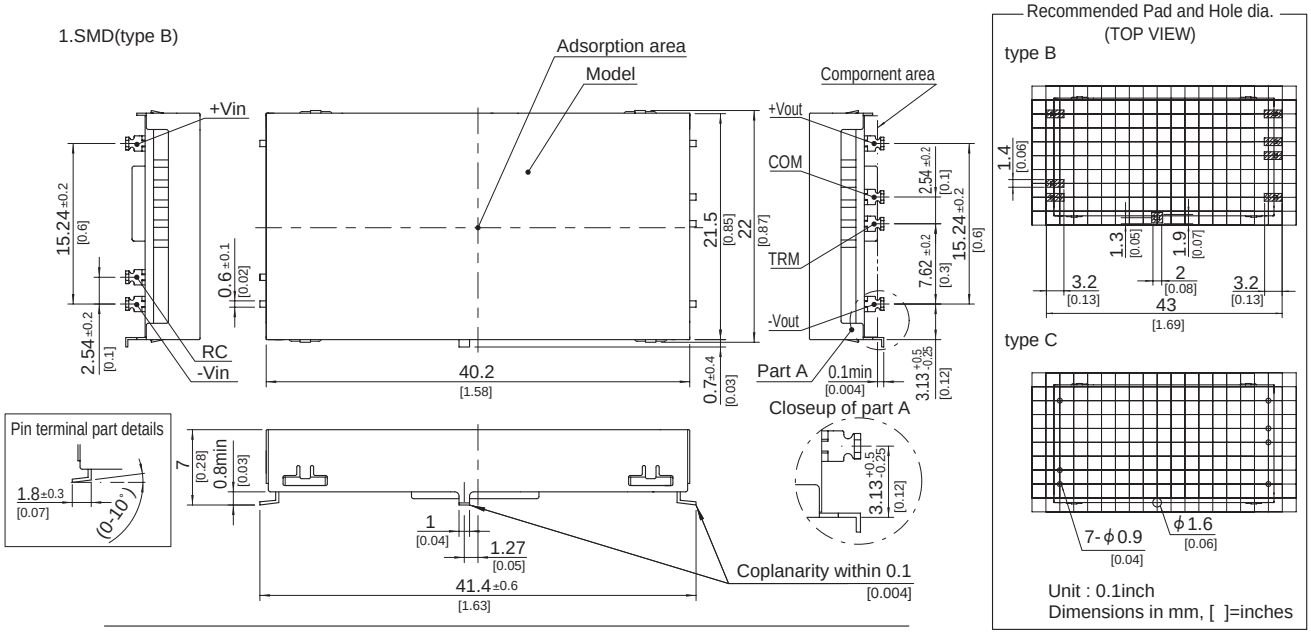

2.DIP(type C)

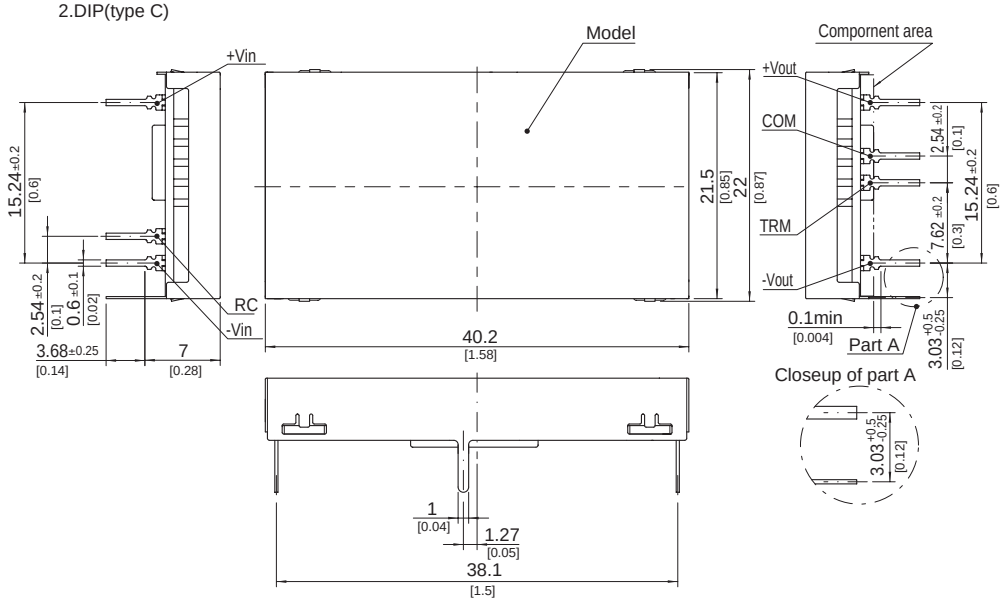

※ Tolerance ±0.5 [±0.02]
※ Dimensions in mm, [ ]=inches
※ Pin terminal thickness : 0.3±0.1 [0.012]
※ Pin terminal material : Copper alloy
※ Plating treatment of terminal : Lead free plating
※ Case thickness : 0.2±0.05 [0.008]
※ Case material : Brass
※ Plating treatment of case : Nickel plating
※ Please keep enough creepage distance with the pattern on PCB and other components.
※ Weight : 10g max

Mouser Electronics

Authorized Distributor

Click to View Pricing, Inventory, Delivery & Lifecycle Information:

Cosel:

SUCW102415BP SUCW32415B-G SUCW1R50515C-C SUCW1R52412BP SUCW30515C-G SUCW61215C SUCW62415BP-G SUCW60515BP SUCW104815BP SUCW1R52415B SUCW62412B SUCW1R54812C-C SUCW62415B SUCW60515C-G SUCW64815BP SUCW62415C-G SUCW60512C SUCW102412BP SUCW1R54815C SUCW100512BP-G SUCW61212C SUCW1R50512B SUCW1R50512C-C SUCW104812BP SUCW101212BP-G SUCW102415C-C SUCW34815C-C SUCW32415C SUCW1R51215BP SUCW32415B SUCW1R51212C SUCW34812B SUCW102415B-G SUCW64812C SUCW32412C SUCW104815B SUCW31215C SUCW101215B SUCW61215BP SUCW1R52412B SUCW1R52415C-C SUCW30512B SUCW100515B SUCW31212C-C SUCW1R50515C SUCW32412B SUCW62415BP SUCW32415BP-G SUCW102415C SUCW100515C SUCW30515C-C SUCW64815C-C SUCW1R52412C-C SUCW31212C SUCW62412BP SUCW104812B SUCW64812BP SUCW30512C-C SUCW62415C-C SUCW61215C-C SUCW34812C SUCW64812C-G SUCW1R51215C-C SUCW32415C-G SUCW1R51212B SUCW60512C-G SUCW61215B SUCW30515C SUCW104812C-C SUCW31212B SUCW101212B SUCW102415C-G SUCW1R52415BP SUCW1R54815B SUCW102412BP-G SUCW1R50512BP SUCW62415B-G SUCW101215C SUCW62412B-G SUCW102415BP-G SUCW61215C-G SUCW1R51215C SUCW30515BP SUCW60512B SUCW64812C-C SUCW101215BP SUCW32412C-C SUCW31215B SUCW62412C SUCW101212C SUCW1R54812BP SUCW101212C-C SUCW61212BP SUCW1R50515BP SUCW100512B SUCW102412B SUCW102412C-G SUCW100515BP SUCW64812B SUCW1R50515B

Компания «ЭлектроПласт» предлагает заключение долгосрочных отношений при поставках импортных электронных компонентов на взаимовыгодных условиях!

Наши преимущества:

- Оперативные поставки широкого спектра электронных компонентов отечественного и импортного производства напрямую от производителей и с крупнейших мировых складов;
- Поставка более 17-ти миллионов наименований электронных компонентов;
- Поставка сложных, дефицитных, либо снятых с производства позиций;
- Оперативные сроки поставки под заказ (от 5 рабочих дней);
- Экспресс доставка в любую точку России;
- Техническая поддержка проекта, помощь в подборе аналогов, поставка прототипов;
- Система менеджмента качества сертифицирована по Международному стандарту ISO 9001;
- Лицензия ФСБ на осуществление работ с использованием сведений, составляющих государственную тайну;
- Поставка специализированных компонентов (Xilinx, Altera, Analog Devices, Intersil, Interpoint, Microsemi, Aeroflex, Peregrine, Syfer, Eurofarad, Texas Instrument, Miteq, Cobham, E2V, MA-COM, Hittite, Mini-Circuits,General Dynamics и др.);

Помимо этого, одним из направлений компании «ЭлектроПласт» является направление «Источники питания». Мы предлагаем Вам помощь Конструкторского отдела:

- Подбор оптимального решения, техническое обоснование при выборе компонента;
- Подбор аналогов;
- Консультации по применению компонента;
- Поставка образцов и прототипов;
- Техническая поддержка проекта;
- Защита от снятия компонента с производства.

Как с нами связаться

Телефон: 8 (812) 309 58 32 (многоканальный)
Факс: 8 (812) 320-02-42
Электронная почта: org@eplast1.ru
Адрес: 198099, г. Санкт-Петербург, ул. Калинина, дом 2, корпус 4, литера А.