THIS DRAWING IS UNPUBLISHED. RELEASED FOR PUBLICATION -
© COPYRIGHT copyright.dgfe- ALL RIGHTS RESERVED.

LOC	DIST
GP	00

REVISIONS

P	LTR	DESCRIPTION	DATE	DWN	APVD
	A	RELEASED PER ECO-12-013192	10OCT2012	BMM	MRS

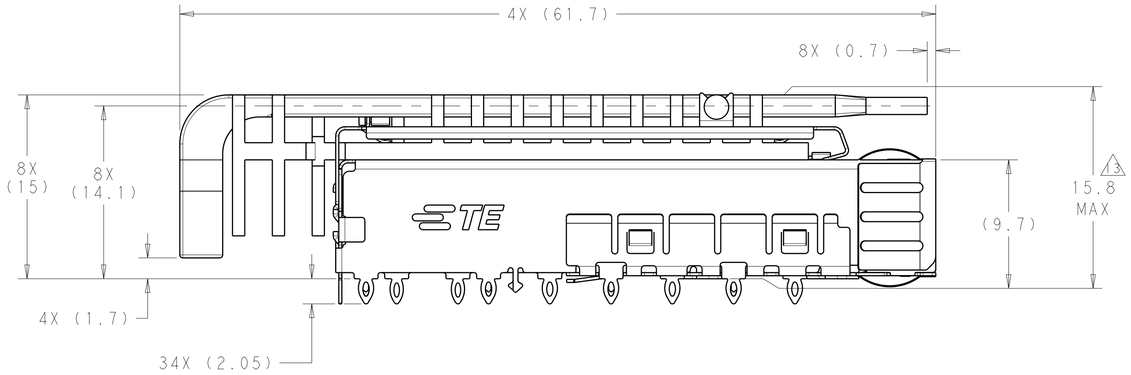

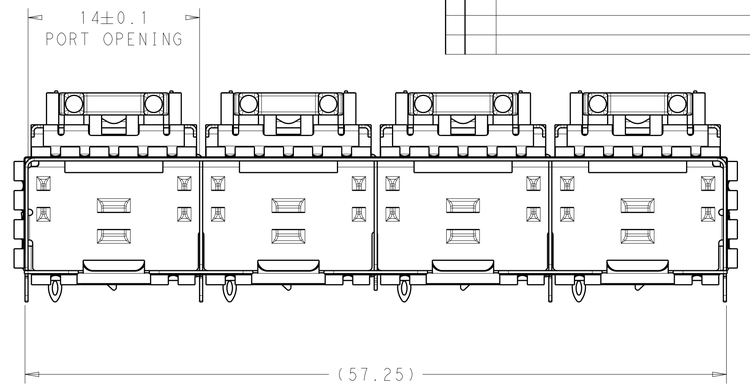

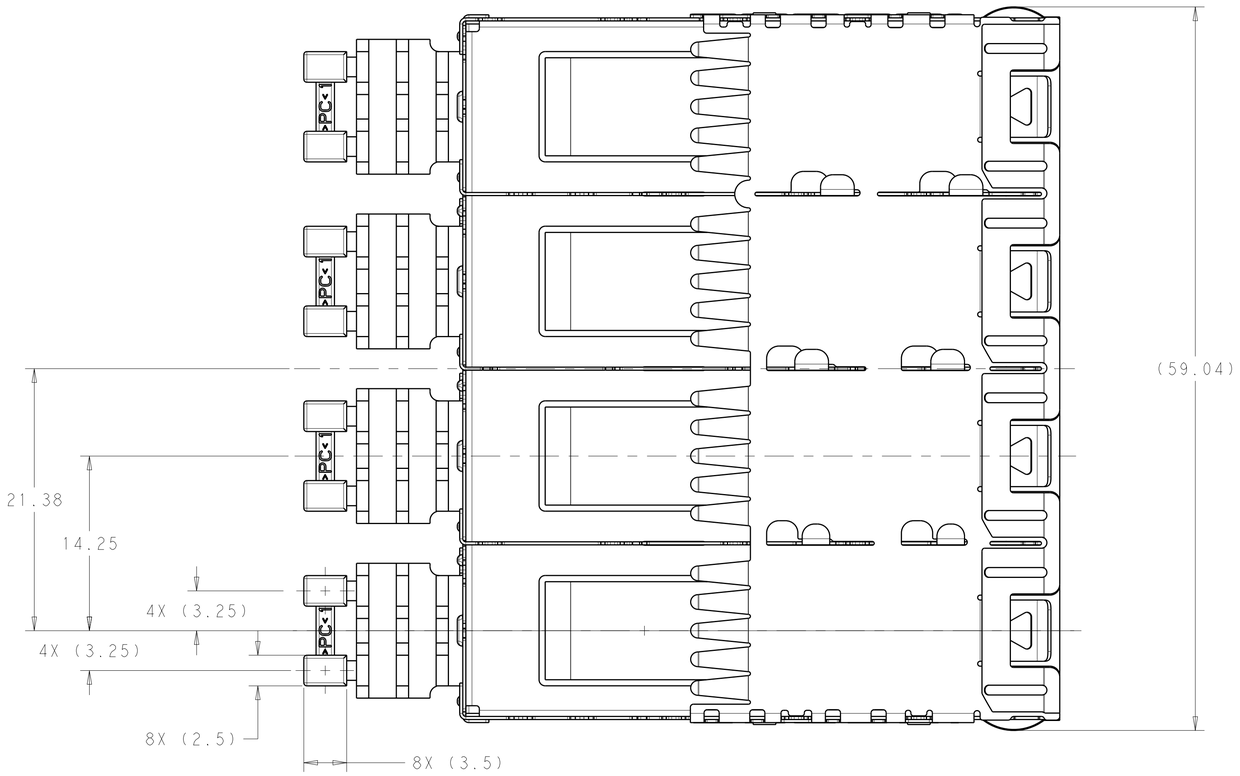

1. MATERIAL:
   CAGE ASSEMBLY: 0.25mm THICK NICKEL SILVER ALLOY.
   LIGHTPIPE/HEATSINK CLIP: STAINLESS STEEL
   LIGHT PIPE: POLYCARBONATE, CLEAR
   HEATSINK: ALUMINUM

2. FINISH:
   SPRINGS: MINIMUM OF 0.8um TIN PLATE OVER A MINIMUM OF 0.8um NICKEL UNDERPLATE.
   NON-PLATED EDGES PERMISSIBLE.
   LIGHTPIPE/HEATSINK CLIP: PASSIVATE.
   HEATSINK: ELECTROLESS NICKEL

3. MATES WITH SFP MSA COMPLIANT TRANSCEIVERS.

4. PADS AND VIAS CHASSIS GROUND.

5. INTERPRETATION OF DATUM REFERENCE FRAME IN ACCORDANCE WITH SECT 4.4.1.1 OF ASME Y14.5M-1994.

6. MINIMUM PC BOARD THICKNESS:
   SINGLE SIDED = 1.50mm
   DOUBLE SIDED = 2.25mm

7. HOLE PATTERN REPEATS FOR EACH PORT. SPACING BETWEEN PORTS IS 14.25mm.

8. DATUM AND BASIC DIMENSION ESTABLISHED BY CUSTOMER.

9. REFERENCE APPLICATION SPEC. 114-13120, HOLE A, FOR RECOMMENDED DRILL HOLE DIAMETER AND PLATING THICKNESS.

10. REFERENCE APPLICATION SPEC. 114-13120, HOLE B, FOR RECOMMENDED DRILL HOLE DIAMETER AND PLATING THICKNESS.

11. CERTAIN MATING TRANCEIVERS MAY REQUIRE ADDITIONAL PCB THICKNESS THAT WOULD BE DETERMINED BY THE CUSTOMER.

12. PRODUCT COMPLIES WITH SPECIFICATION SFF-8433 IMPROVED PLUGGABLE FORM FACTOR FOR SFP+ GANGED CAGES.

13. DIMENSION APPLIES PRIOR TO INSERTION OF SFP MODULE.

14. PACKAGED AS A COMPLETE ASSEMBLY.

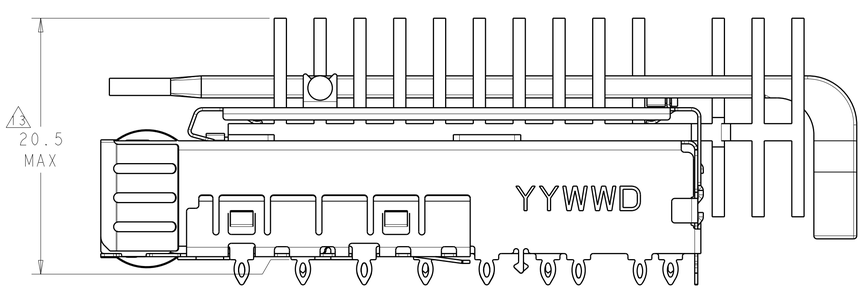

2149745-2 AS SHOWN

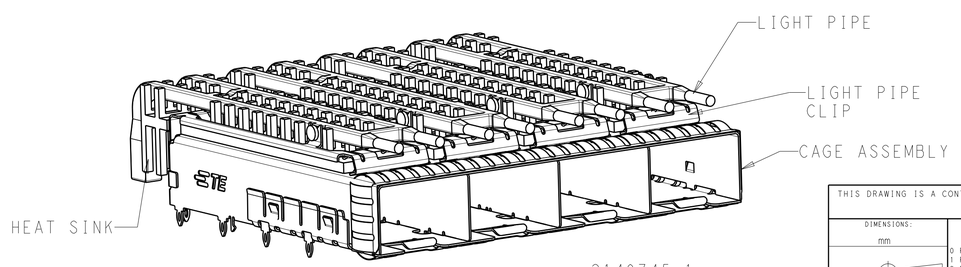

2149745-1
FINISHED ASSEMBLY
SCALE 5:2

14	2149745-2
14	2149745-1
	PART NUMBER

THIS DRAWING IS A CONTROLLED DOCUMENT.

DIMENSIONS: mm

TOLERANCES UNLESS OTHERWISE SPECIFIED:
0 PLC ±0.1
1 PLC ±0.1
2 PLC ±0.1
3 PLC ±0.1
4 PLC ±0.1
ANGLES ±1°

MATERIAL 1

FINISH - -

DWN B. MATTHEWS 17AUG2010
CHK M. SCHMITT 17AUG2010
APVD M. SCHMITT 17AUG2010

PRODUCT SPEC 108-2364
APPLICATION SPEC 114-13120
WEIGHT -

TE Connectivity

NAME SFP+ ENHANCED 1X4 CAGE ASSEMBLY PRESS FIT, EXTERNAL EMI SPRINGS -

SIZE	CAGE CODE	DRAWING NO	RESTRICTED TO
A1	00779	C-2149745	-

Customer Drawing SCALE 4:1 SHEET 1 OF 4 REV A

4805 (3/11)

THIS DRAWING IS UNPUBLISHED. RELEASED FOR PUBLICATION -
© COPYRIGHT copyright.dgfe- ALL RIGHTS RESERVED.

LOC	DIST
GP	00

REVISIONS

P	LTR	DESCRIPTION	DATE	DWN	APVD
	-	SEE SHEET 1	-	-	-

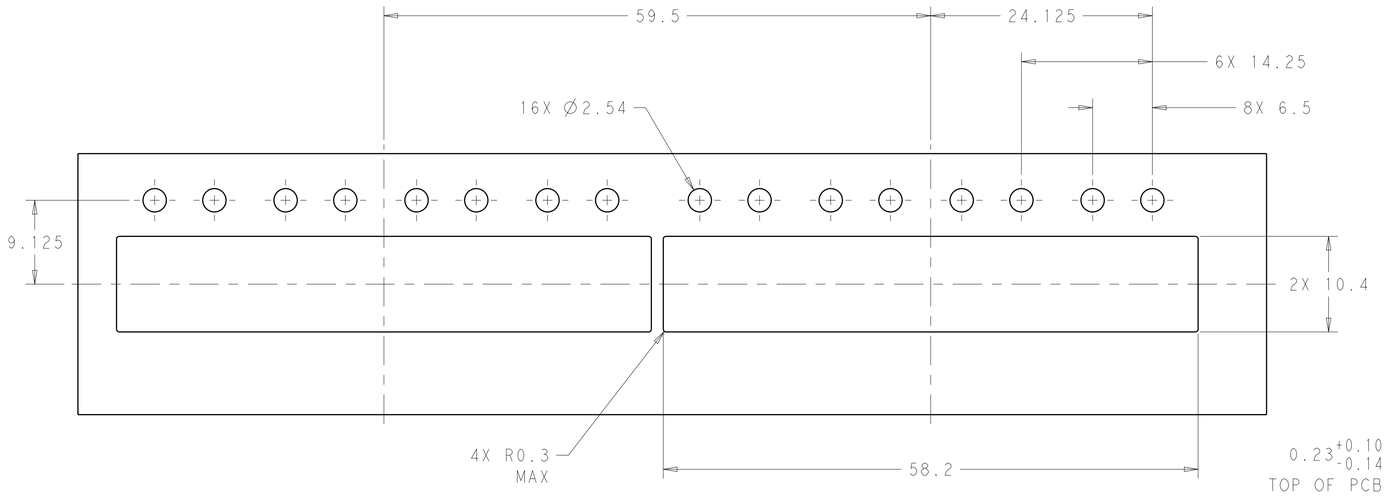

RECOMMENDED BEZEL CUT-OUT
SINGLE SIDED APPLICATIONS
SCALE 3:1

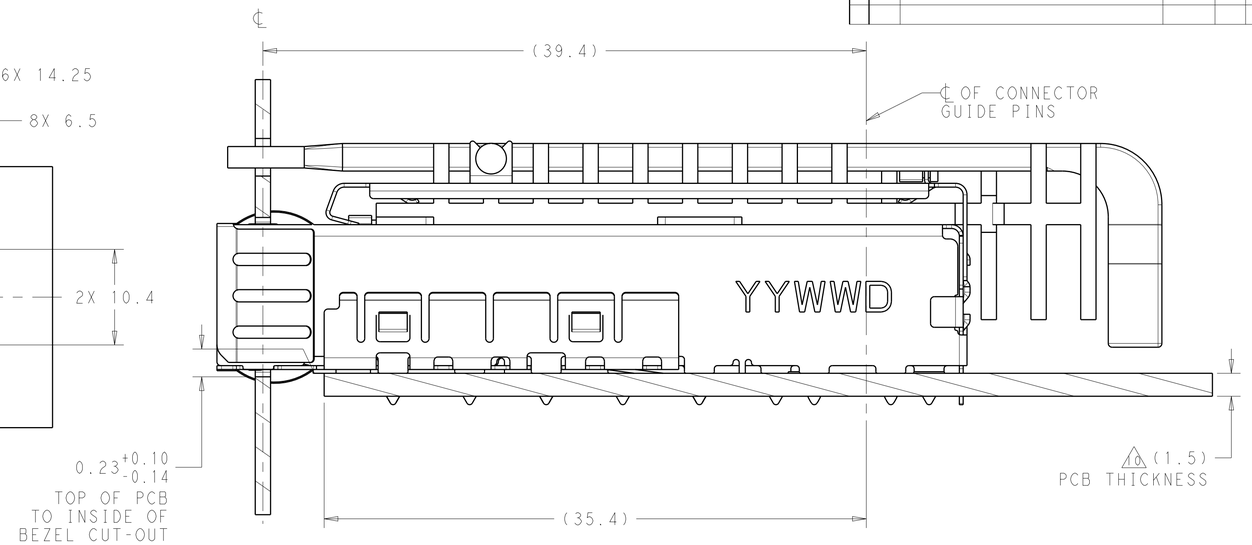

2149745-1
MOUNTED ON PC BOARD
SHOWN THRU RECOMMENDED BEZEL

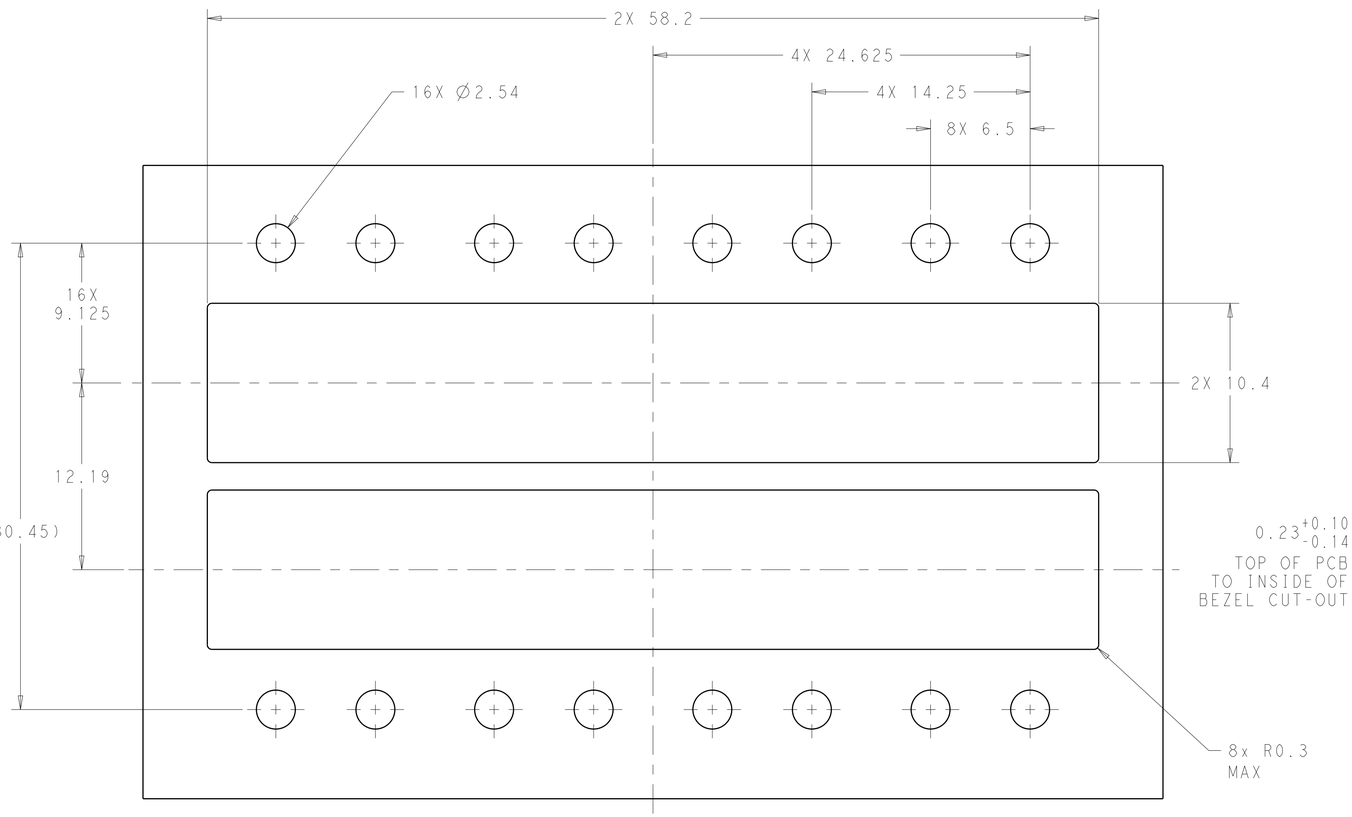

RECOMMENDED BEZEL CUT-OUT
BELLY TO BELLY APPLICATIONS

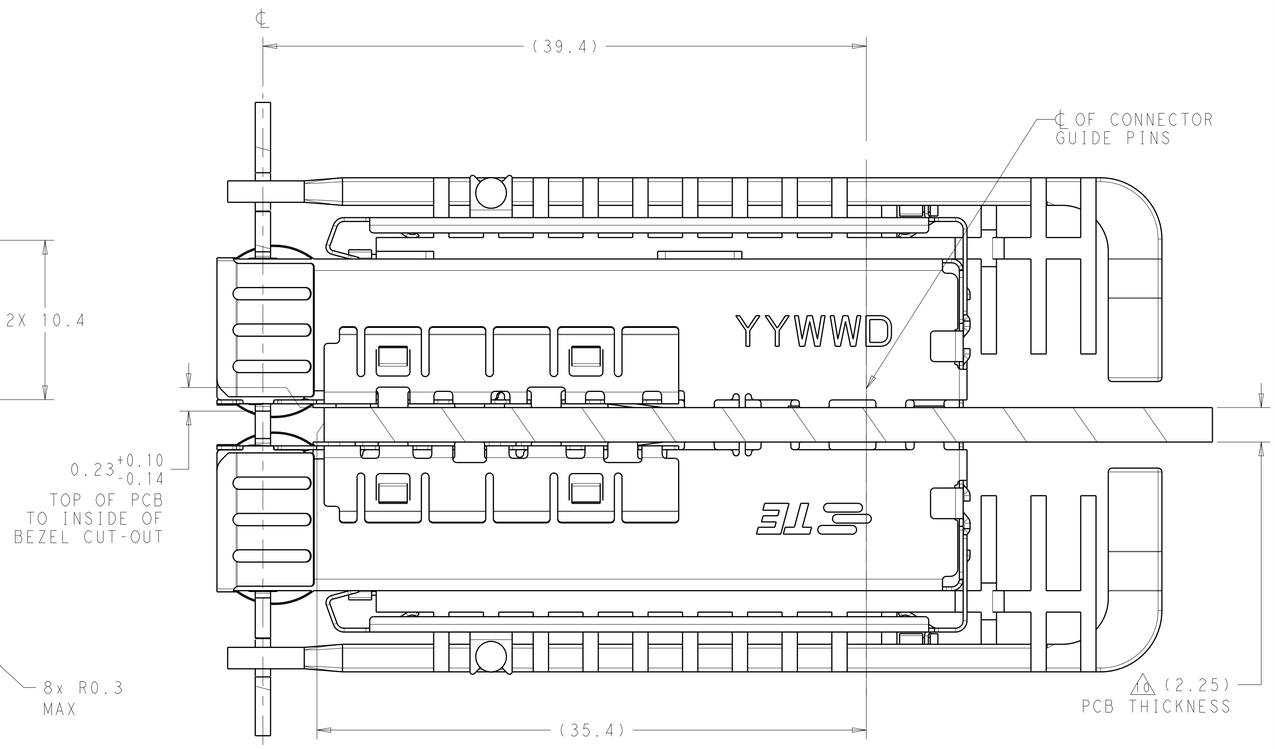

2149745-1
MOUNTED BELLY TO BELLY ON PC BOARD
SHOWN THRU RECOMMENDED BEZEL

THIS DRAWING IS A CONTROLLED DOCUMENT.

DIMENSIONS: mm

TOLERANCES UNLESS OTHERWISE SPECIFIED:
0 PLC ±0.1
1 PLC ±0.1
2 PLC ±0.1
3 PLC ±0.1
4 PLC ±0.1
ANGLES ±1°

MATERIAL 1
FINISH -

DWN B. MATTHEWS 17AUG2010
CHK M. SCHMITT 17AUG2010
APVD M. SCHMITT 17AUG2010
PRODUCT SPEC 108-2364
APPLICATION SPEC 114-13120
WEIGHT -

Tyco Electronics TE — TE Connectivity

NAME SFP+ ENHANCED 1X4 CAGE ASSEMBLY
PRESS FIT, EXTERNAL EMI SPRINGS
-

SIZE	CAGE CODE	DRAWING NO	RESTRICTED TO
A1	00779	C-2149745	-

Customer Drawing | SCALE 4:1 | SHEET 2 OF 4 | REV A

4805 (3/11)

THIS DRAWING IS UNPUBLISHED. RELEASED FOR PUBLICATION -
© COPYRIGHT copyright.dgte- ALL RIGHTS RESERVED.

LOC	DIST
GP	00

REVISIONS

P	LTR	DESCRIPTION	DATE	DWN	APVD
	-	SEE SHEET 1	-	-	-

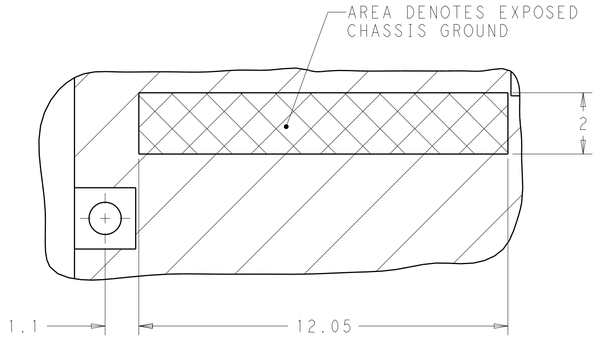

DETAIL A
4X INDIVIDUALLY
SCALE 10:1

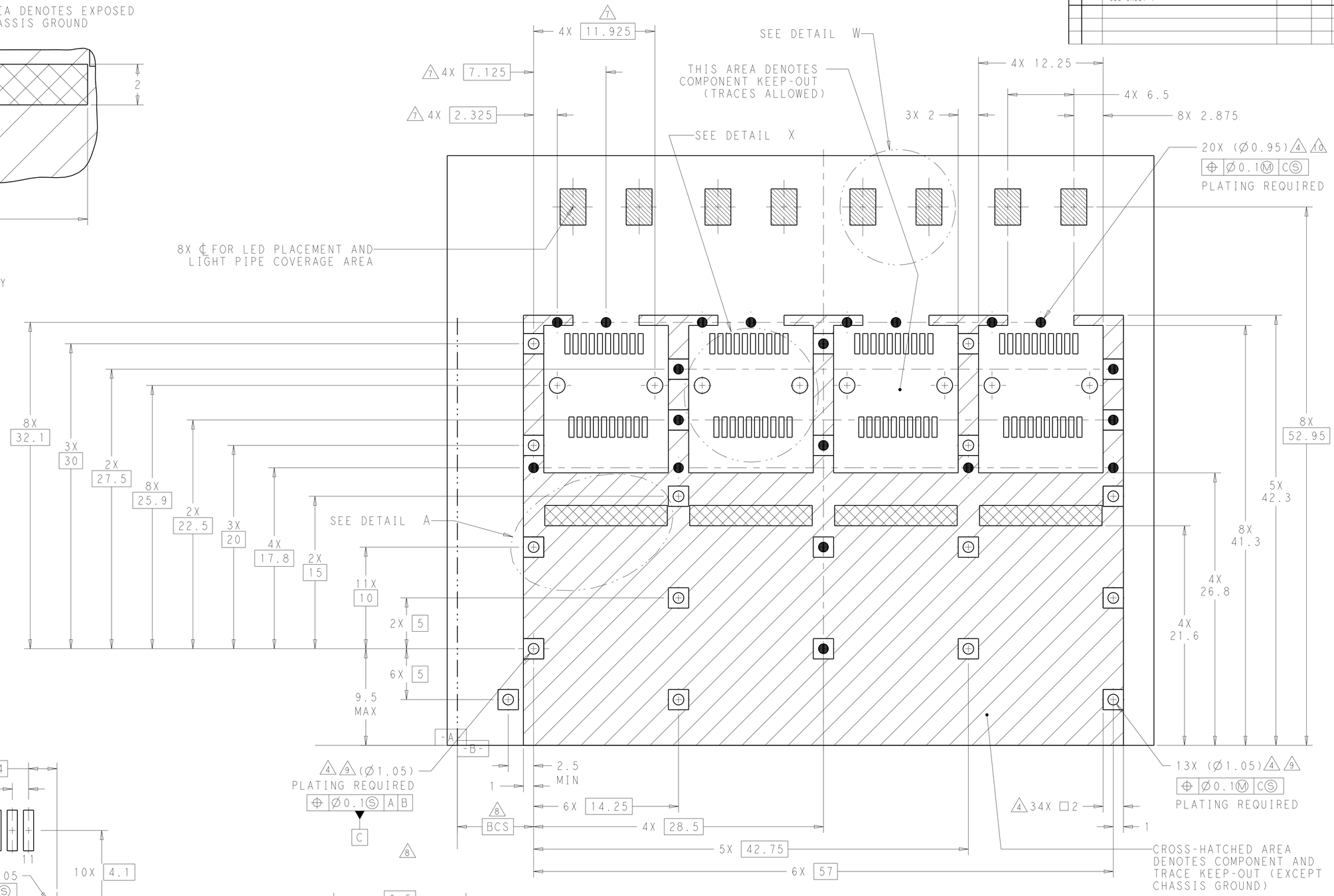

RECOMMENDED PCB CONFIGURATION
WITH KEEP-OUT AREAS
SINGLE SIDED APPLICATIONS
SCALE 5:1

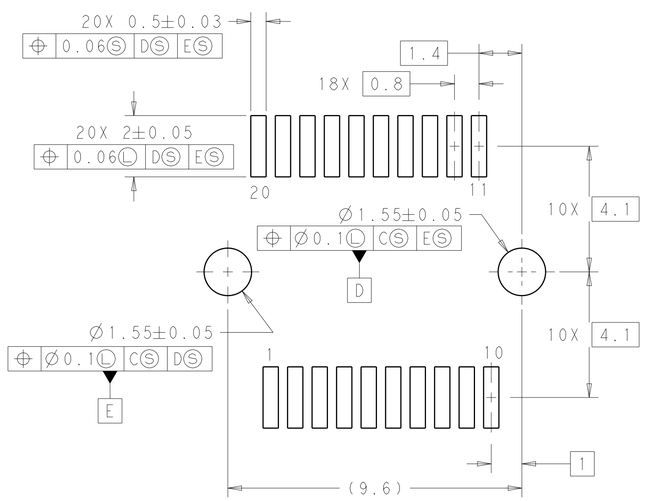

DETAIL X
RECOMMENDED PT CONNECTOR LAYOUT
4X INDIVIDUALLY
SCALE 10:1

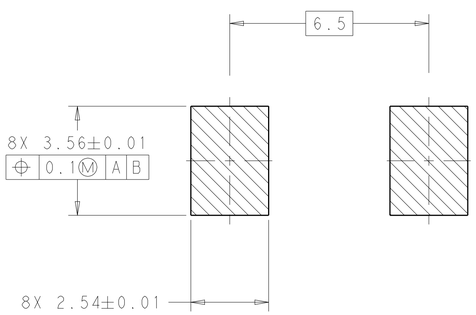

DETAIL W
SCALE 10:1

THIS DRAWING IS A CONTROLLED DOCUMENT.	DWN B. MATTHEWS 17AUG2010	Tyco Electronics TE	TE Connectivity
DIMENSIONS: mm	CHK M. SCHMITT 17AUG2010	NAME SFP+ ENHANCED 1X4 CAGE ASSEMBLY PRESS FIT, EXTERNAL EMI SPRINGS -	
TOLERANCES UNLESS OTHERWISE SPECIFIED: 0 PLC ±0.1, 1 PLC ±0.1, 2 PLC ±0.1, 3 PLC ±0.1, 4 PLC ±0.1, ANGLES ±1°	APVD M. SCHMITT 17AUG2010	PRODUCT SPEC 108-2364	
		APPLICATION SPEC 114-13120	
MATERIAL 1	FINISH - -	WEIGHT -	SIZE A1 · CAGE CODE 00779 · DRAWING NO C-2149745 · RESTRICTED TO -
		Customer Drawing	SCALE 4:1 · SHEET 3 OF 4 · REV A

4805 (3/11)

THIS DRAWING IS UNPUBLISHED. RELEASED FOR PUBLICATION -
© COPYRIGHT copyright.dgkc- ALL RIGHTS RESERVED.

LOC	DIST
GP	00

REVISIONS

P	LTR	DESCRIPTION	DATE	DWN	APVD
	-	SEE SHEET 1	-	-	-

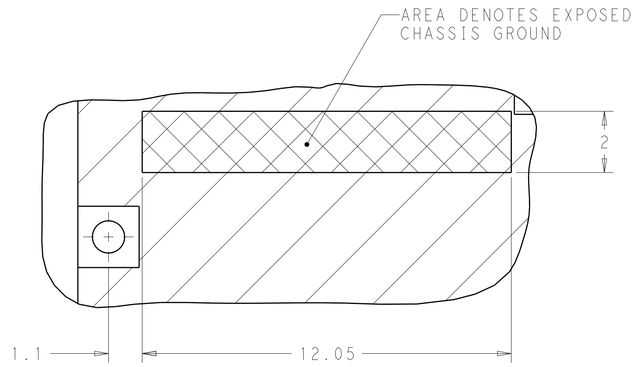

DETAIL B
4X INDIVIDUALLY
SCALE 10:1

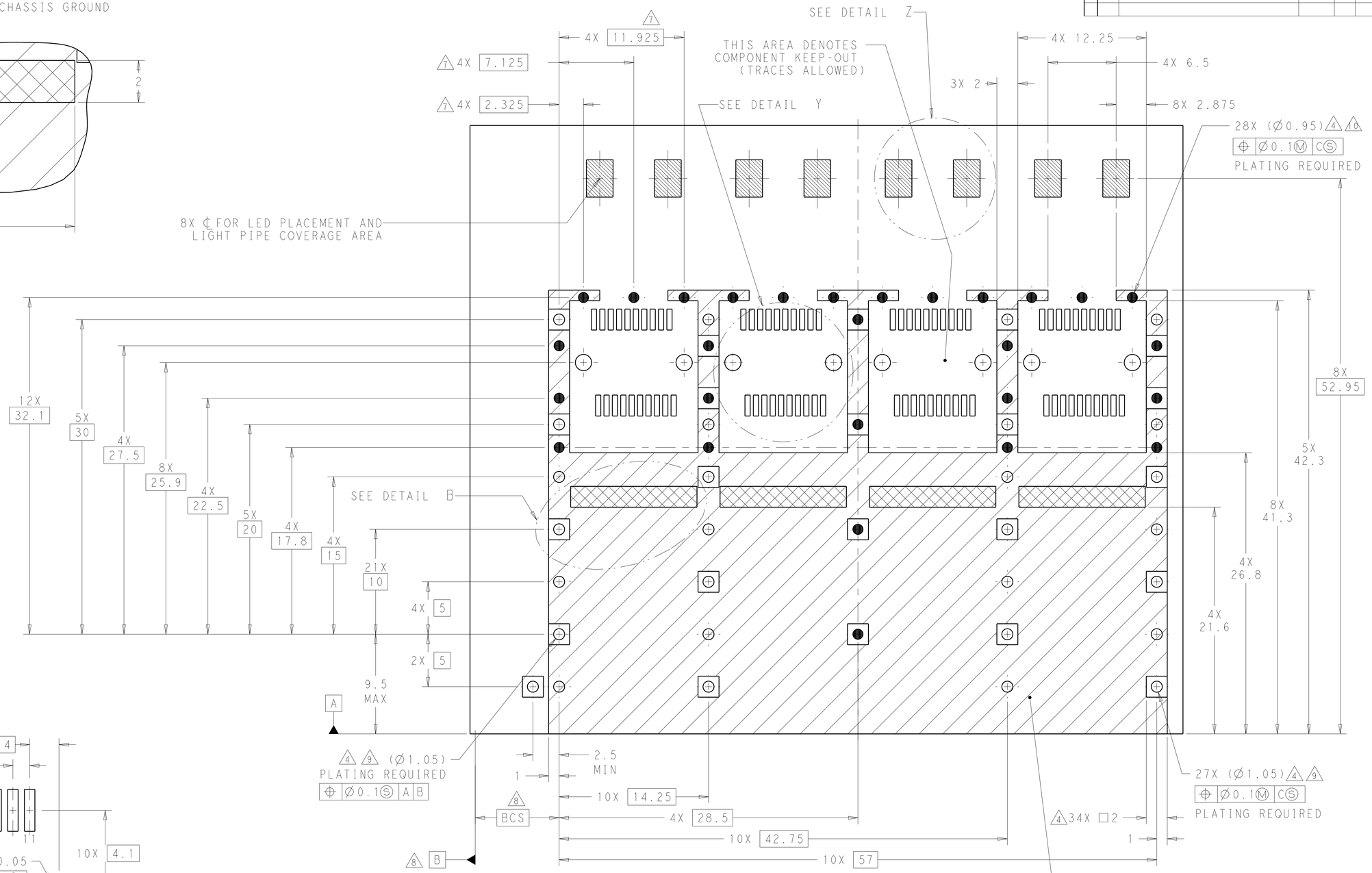

RECOMMENDED PCB CONFIGURATION
WITH KEEP-OUT AREAS
BELLY TO BELLY APPLICATIONS
SCALE 5:1 6

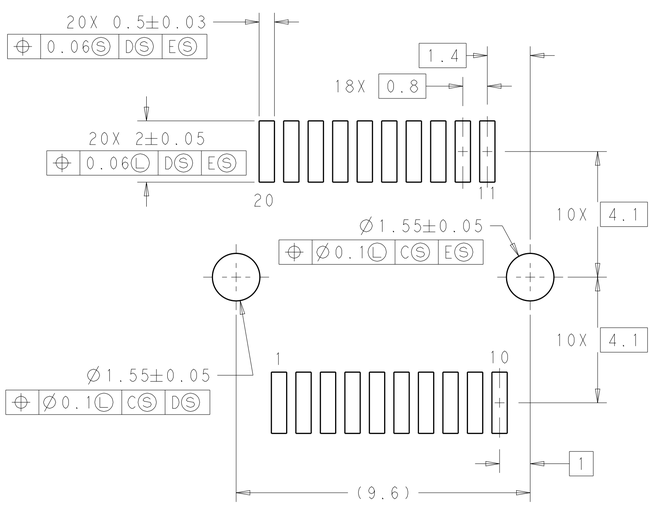

DETAIL Y
RECOMMENDED PT CONNECTOR LAYOUT
8X INDIVIDUALLY
SCALE 10:1

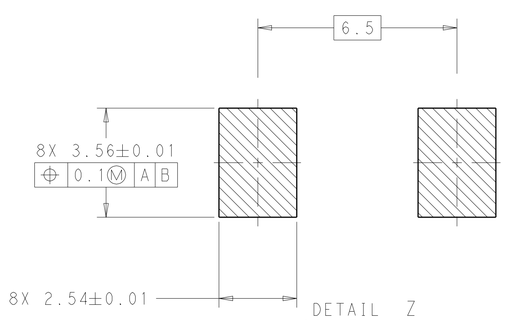

DETAIL Z
SCALE 10:1

THIS DRAWING IS A CONTROLLED DOCUMENT.

DIMENSIONS: mm

TOLERANCES UNLESS OTHERWISE SPECIFIED:
0 PLC ±0.1
1 PLC ±0.1
2 PLC ±0.1
3 PLC ±0.1
4 PLC ±0.1
ANGLES ±1°

MATERIAL 1
FINISH -

DWN	B. MATTHEWS	17AUG2010
CHK	M. SCHMITT	17AUG2010
APVD	M. SCHMITT	17AUG2010

PRODUCT SPEC 108-2364
APPLICATION SPEC 114-13120
WEIGHT -

Tyco Electronics TE — TE Connectivity

NAME SFP+ ENHANCED 1X4 CAGE ASSEMBLY PRESS FIT, EXTERNAL EMI SPRINGS -

SIZE	CAGE CODE	DRAWING NO	RESTRICTED TO
A1	00779	C-2149745	-

Customer Drawing | SCALE 4:1 | SHEET 4 OF 4 | REV A

4805 (3/11)

Компания «ЭлектроПласт» предлагает заключение долгосрочных отношений при поставках импортных электронных компонентов на взаимовыгодных условиях!

Наши преимущества:

- Оперативные поставки широкого спектра электронных компонентов отечественного и импортного производства напрямую от производителей и с крупнейших мировых складов;
- Поставка более 17-ти миллионов наименований электронных компонентов;
- Поставка сложных, дефицитных, либо снятых с производства позиций;
- Оперативные сроки поставки под заказ (от 5 рабочих дней);
- Экспресс доставка в любую точку России;
- Техническая поддержка проекта, помощь в подборе аналогов, поставка прототипов;
- Система менеджмента качества сертифицирована по Международному стандарту ISO 9001;
- Лицензия ФСБ на осуществление работ с использованием сведений, составляющих государственную тайну;
- Поставка специализированных компонентов (Xilinx, Altera, Analog Devices, Intersil, Interpoint, Microsemi, Aeroflex, Peregrine, Syfer, Eurofarad, Texas Instrument, Miteq, Cobham, E2V, MA-COM, Hittite, Mini-Circuits,General Dynamics и др.);

Помимо этого, одним из направлений компании «ЭлектроПласт» является направление «Источники питания». Мы предлагаем Вам помощь Конструкторского отдела:

- Подбор оптимального решения, техническое обоснование при выборе компонента;
- Подбор аналогов;
- Консультации по применению компонента;
- Поставка образцов и прототипов;
- Техническая поддержка проекта;
- Защита от снятия компонента с производства.

Как с нами связаться

Телефон: 8 (812) 309 58 32 (многоканальный)
Факс: 8 (812) 320-02-42
Электронная почта: org@eplast1.ru
Адрес: 198099, г. Санкт-Петербург, ул. Калинина, дом 2, корпус 4, литера А.