Pressure Sensors

Low-Cost, Stainless Steel, Isolated Sensors

19 mm Series

FEATURES

- Low cost
- Rugged, isolated stainless steel package
- Small size
- Reliable semiconductor technology
- Calibrated and temperature compensated
- Absolute and gage pressures
- Vacuum compatible, isolated sensors
- 0 psi to 3 psi to, 0 psi to 500 psi

TYPICAL APPLICATIONS

- Industrial controls
- Process control systems
- Industrial automation and flow control
- Pressure calibrators

Honeywell's stainless steel 19C, 19U, and 19 Vacuum Gage Series sensors were developed for pressure applications that involve measurement of hostile media in harsh environments compatible with 316 stainless steel. The special Vacuum Gage Series sensors are specifically designed for applications that can be exposed to vacuum.

The 19C Series are calibrated and temperature compensated. They are available for use with either a constant voltage or current source. They feature a variety of pressure connections to allow use in a wide range of OEM (Original Equipment Manufacturer) equipment. The 19U Series is uncompensated for applications that use their own specialized circuit designs.

The 19C and 19U Series sensors are rugged and reliable transducers for use in a wide variety of pressure sensing applications where corrosive liquids or gases are monitored.

19C, 19U, AND 19 VACUUM GAGE EQUIVALENT CIRCUIT

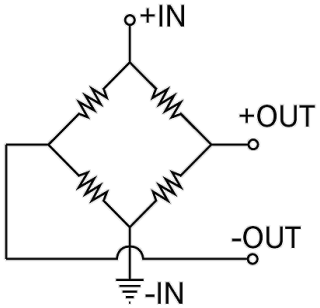

⚠ WARNING

PERSONAL INJURY

DO NOT USE these products as safety or emergency stop devices or in any other application where failure of the product could result in personal injury.

Failure to comply with these instructions could result in death or serious injury.

⚠ WARNING

MISUSE OF DOCUMENTATION

- The information presented in this product sheet is for reference only. Do not use this document as a product installation guide.
- Complete installation, operation, and maintenance information is provided in the instructions supplied with each product.

Failure to comply with these instructions could result in death or serious injury.

PRESSURE SENSOR CHARACTERISTICS – ALL DEVICES

Environmental specifications	
Compensated temperature range	0 °C to 82 °C [32 °F to 180 °F]
Operating temperature range	-40 °C to 125 °C [-40 °F to 257 °F]
Storage temperature range	-40 °C to 125 °C [-40 °F to 257 °F]
Vibration	10 G at 20 Hz to 2000 Hz
Shock	100 G for 11 ms
Life	1 million cycles min.
Insulation resistance	100 mΩ at 50 Vdc
Maximum ratings	
Voltage version "K"	Supply voltage V_S = +15 Vdc
Voltage version "L"	Supply current I_S = +2.0 mA

PRESSURE RANGE SPECIFICATIONS (19C, 19U)

Catalog Listing	Pressure range	Proof pressure [7]	Burst pressure [8]
19(C,U) 003P G (1…9) (K/L)	0 psig to 3 psig	9 psig	15 psig
19(C,U) 005P G (1…9) (K/L)	0 psig to 5 psig	15 psig	25 psig
19(C,U) 010P G (1…9) (K/L)	0 psig to 10 psig	30 psig	50 psig
19(C,U) 015P (A,G,V) (1…9) (K/L)	0 psi to 15 psi	45 psi	75 psi
19(C,U) 030P (A,G,V) (1…9) (K/L)	0 psi to 30 psi	90 psi	150 psi
19(C,U) 050P (A,G,V) (1…9) (K/L)	0 psi to 50 psi	150 psi	250 psi
19(C,U) 100P (A,G,V) (1…9) (K/L)	0 psi to 100 psi	300 psi	500 psi
19(C,U) 200P (A,G,V) (1…9) (K/L)	0 psi to 200 psi	600 psi	1000 psi
19(C,U) 300P (A,G,V) (1…9) (K/L)	0 psi to 300 psi	900 psi	1500 psi
19(C,U) 500P (A,G,V) (1…9) (K/L)	0 psi to 500 psi	1200 psi	2400 psi

Notes:

7. The maximum pressure that can be applied without changing the transducer's performance or accuracy.

8.The maximum pressure that can be applied to a transducer without rupture of either the sensing element or transducer case.

19C SERIES PERFORMANCE CHARACTERISTICS [1]

Characteristic	Minimum	Typical	Maximum	Unit
Zero pressure offset	-2	0	2	mV
Full-scale span [2]	98	100	102	mV
Full-scale span (3 psi and 5 psi "K" units only) [2]	48	50	52	mV
Pressure non-linearity [3]	–	±0.1	±0.25	%FSS
Pressure hysteresis [3]	–	±0.015	±0.030	%FSS
Repeatability	–	±0.010	±0.030	%FSS
Temp. effect on span [4]	–	±0.5	±1.0	%FSS
Temp. effect on offset [4]	–	±0.5	±1.0	%FSS
Temp. effect on span (0 psi to 3 psi and 0 psi to 5 psi only) [4]	–	–	±2.0	%FSS
Temp. effect on offset (0 psi to 3 psi and 0 psi to 5 psi only) [4]	–	–	±2.0	%FSS
Thermal hysteresis (0 °C to 82 °C [32 °F to 180 °F])	–	±0.1	±0.3	%FSS
Long-term stability of offset and span [5]	–	±0.1	±0.3	%FSS
Response time [6]	–	0.1	–	ms
Common mode voltage (voltage version "K") [9]	0.5	1.3	2.0	Vdc
Input impedance (current version "L")	2.0	4.5	8.0	kΩ
Input impedance (voltage version "K")	8.0	25	50	kΩ
Output resistance	3.0	4.5	6.0	kΩ

19U SERIES PERFORMANCE CHARACTERISTICS [1]

Characteristic	Minimum	Typical	Maximum	Unit
Zero pressure offset	-7.5	1.0	7.5	mV/V
Full-scale span [2]	35	40	60	mV/V
Full-scale span (3 psi and 5 psi only) [2]	20	30	40	mV/V
Pressure non-linearity [3]	–	±0.1	±0.25	%FSS
Pressure hysteresis [3]	–	±0.015	±0.030	%FSS
Repeatability	–	±0.010	±0.030	%FSS
Temp. coefficient of resistance [10] (0 °C to 82 °C [32 °F to 180 °F])	2700	3420	4500	ppm/°C
Temp. coefficient of offset [10] (0 °C to 82 °C [32 °F to 180 °F])	–	30	–	µV/V/°C
Temp. coefficient of span [10] (0 °C to 82 °C [32 °F to 180 °F])	360	720	1260	ppm/°C
Thermal hysteresis (0 °C to 82 °C [32 °F to 180 °F])	–	±0.1	±0.3	%FSS
Long-term stability of offset and span [5]	–	±0.1	±0.3	%FSS
Response time [6]	–	±0.1	–	ms
Input resistance	4.00	4.75	6.0	kΩ
Output resistance	4.00	4.75	6.0	kΩ

19C VACUUM GAGE COMPENSATED SERIES PERFORMANCE CHARACTERISTICS [1]

Characteristic	Minimum	Typical	Maximum	Unit
Zero pressure offset (at 0 psig)	-2	0	2	mV
Full-scale span [2] (0 psig to positive full-scale)	98	100	102	mV
Pressure non-linearity [3]	–	±0.1	±0.25	%FSS
Pressure hysteresis [3]	–	±0.015	±0.030	%FSS
Repeatability	–	±0.010	±0.030	%FSS
Temp. effect on span [4]	–	±0.5	±1.0	%FSS
Temp. effect on offset [4]	–	±0.5	±1.0	%FSS
Thermal hysteresis (0 °C to 82 °C [32 °F to 180 °F])	–	±0.1	±0.3	%FSS
Long-term stability of offset and span [5]	–	±0.1	±0.3	%FSS
Response time [6]	–	0.1	–	ms
Common mode voltage (voltage version “K”) [9]	0.5	1.3	2.0	Vdc
Input impedance (current version “L”)	1.5	4.5	8.0	kΩ
Input impedance (voltage version “K”)	8.0	25	50	kΩ
Output resistance	3.0	4.5	6.0	kΩ

19U VACUUM GAGE UNCOMPENSATED SERIES PERFORMANCE CHARACTERISTICS [1]

Characteristic	Minimum	Typical	Maximum	Unit
Zero pressure offset	-7.5	1.0	7.5	mV/V
Full-scale span [2] (0 psig to positive full-scale)	35	40	60	mV/V
Pressure non-linearity [3]	–	±0.1	±0.25	%FSS
Pressure hysteresis [3]	–	±0.015	±0.030	%FSS
Repeatability	–	±0.010	±0.030	%FSS
Temp. coefficient of resistance [10] (0 °C to 82 °C [32 °F to 180 °F])	2700	3420	4500	ppm/°C
Temp. coefficient of offset [10] (0 °C to 82 °C [32 °F to 180 °F])	–	30	–	µV/V/°C
Temp. coefficient of span [10] (0 °C to 82 °C [32 °F to 180 °F])	360	720	1260	ppm/°C
Thermal hysteresis (0 °C to 82 °C [32 °F to 180 °F])	–	±0.1	±0.3	%FSS
Long-term stability of offset and span [5]	–	±0.1	±0.3	%FSS
Response time [6]	–	±0.1	–	ms
Input resistance	4.00	4.75	6.0	kΩ
Output resistance	4.00	4.75	6.0	kΩ

NOTES

1. Reference conditions (unless otherwise noted): T_A = 25 °C [77 °F]; 19C Supply V_S = 10 Vdc ±0.01 Vdc or I_S = 1.5 mA ±0.0015 mA; 19U Supply V_S = 5 Vdc ±0.01 Vdc or I = 1.0 mA ±0.0015 mA
2. Full-scale span (FSS) is the algebraic difference between the output voltage at full-scale pressure and the output at zero pressure. FSS is ratiometric to supply voltage.
3. Pressure non-linearity is based on best-fit straight line from zero to the full-scale pressure. Pressure hysteresis is the maximum output difference at any point within the operation pressure range for increasing and decreasing pressure.
4. Maximum error band of the offset voltage or span over the compensated temperature range, relative to the 25 °C [77 °F] reading.
5. Long-term stability over a six-month period.
6. Response time for a 0 psi to FSS pressure step change, 10 % to 90 % rise time.
9. Common mode voltage as measured from output to ground. For higher levels of common mode voltage, contact factory.
10. The error band resulting from a maximum deviation of a transducer's output parameter (offset, span, or resistance) as temperature is varied 25 °C [77 °F] to any other temperature within the specified range (0 °C to 82 °C [32 °F to 180 °F]). This parameter is not 100 % tested and is guaranteed by process design and tested on a sample basis only. Temperature coefficient of span is evaluated using a constant current source.

PHYSICAL DIMENSIONS, for reference only, mm [in]

Package 1 (see note): Cell Package

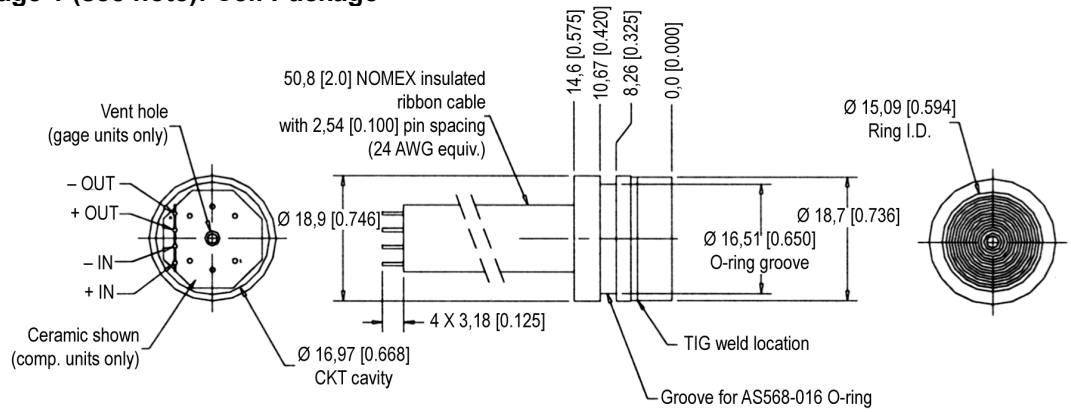

Note: Non-concentricity effects at the diaphragm weld area may cause runout of up to ±0.006 in between the upper and lower portions of the sensor body. (It is recommended to use a counter bore to mate with this device to allow for this non-concentricity).

Package 2: Flush Mount Package

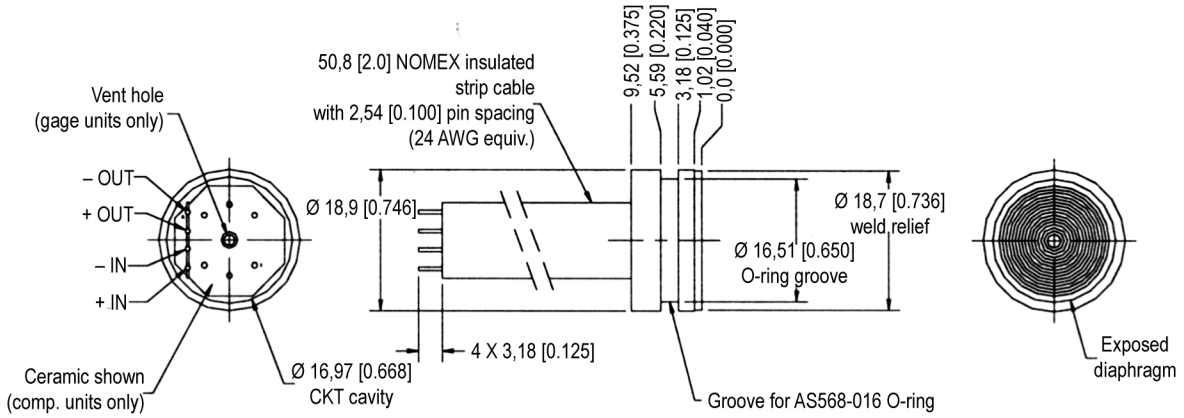

Package 3: Flush Mount with Flange

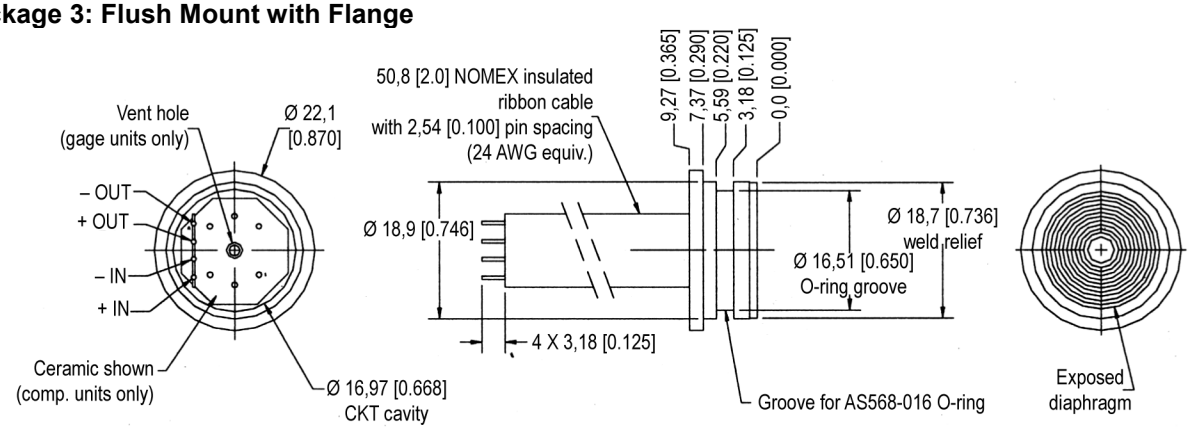

Package 4: Male 1/8-27 NPT

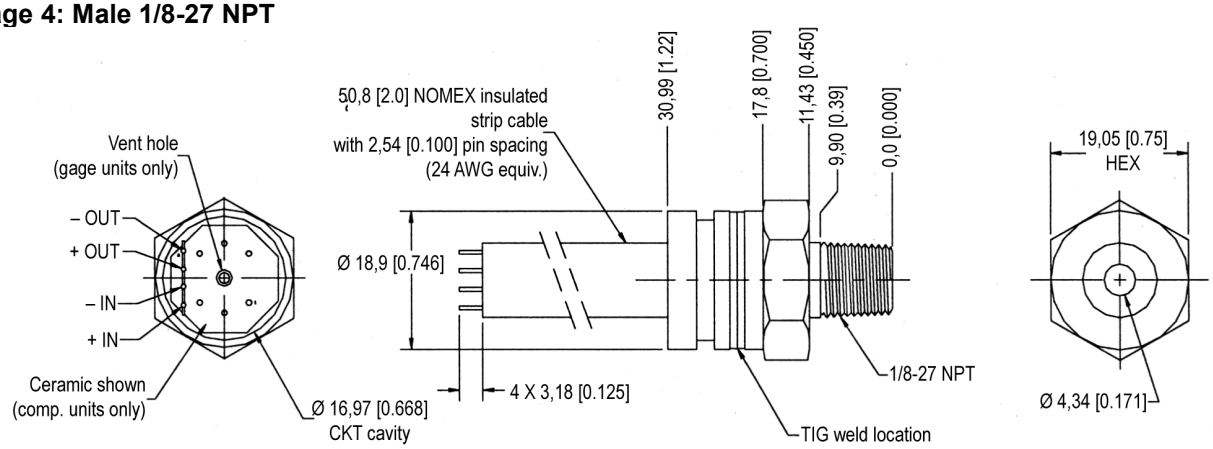

Package 5: Male 1/4-18 NPT

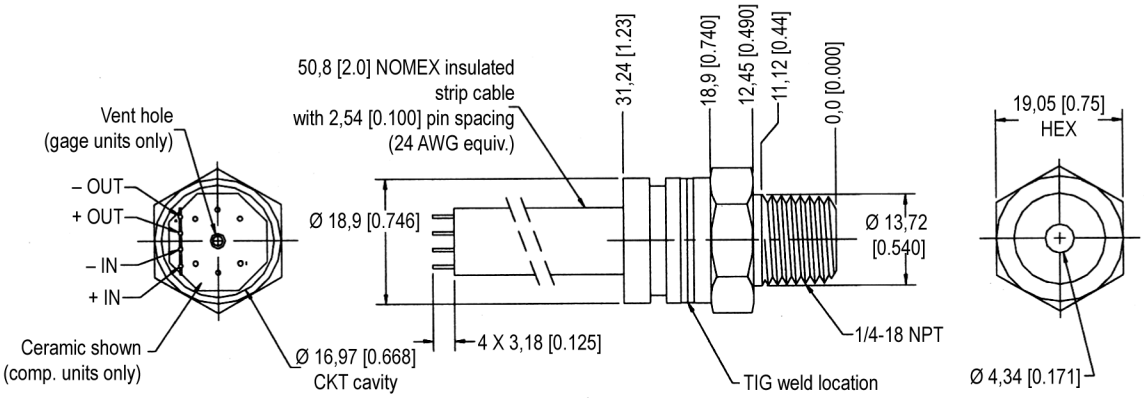

Package 6: Male 7/16 UNF

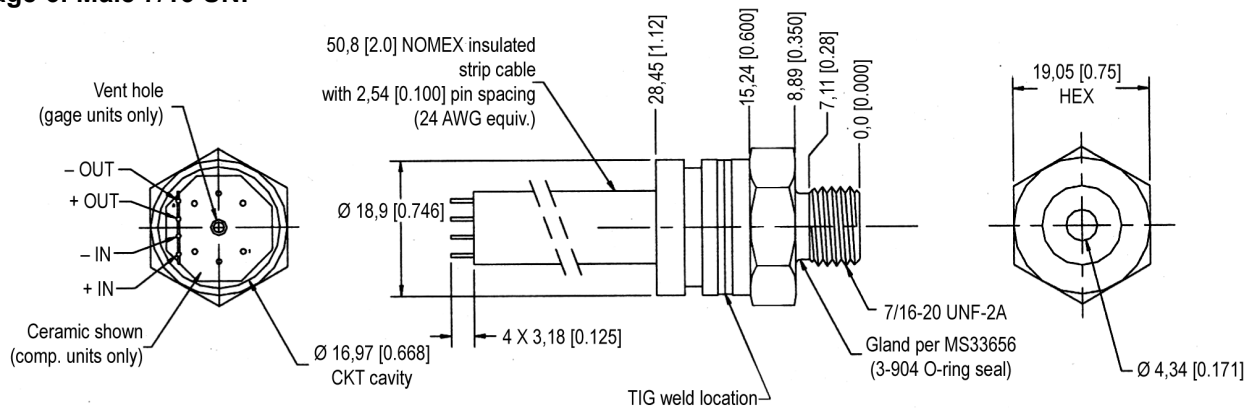

Package 7: Male 1/4 BSPP

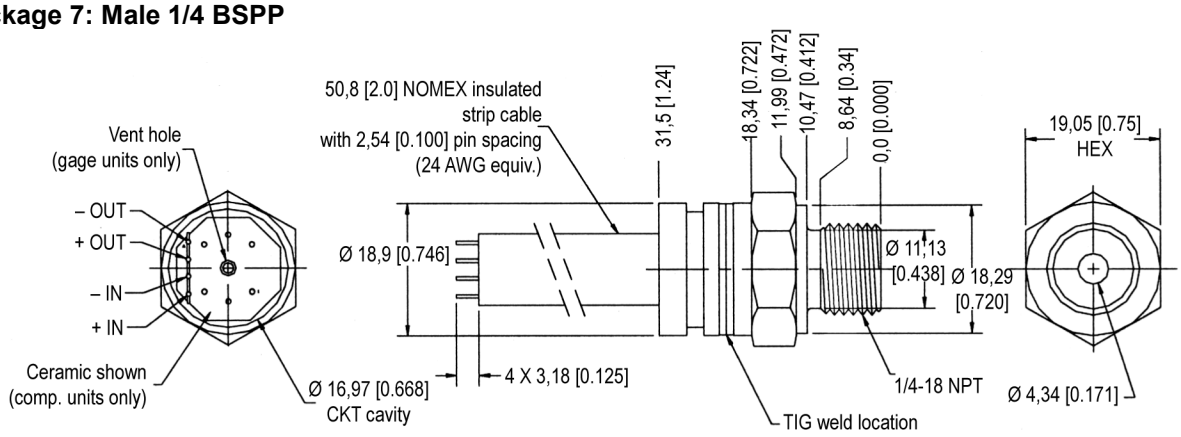

Package 8: Euro Ring (See note)

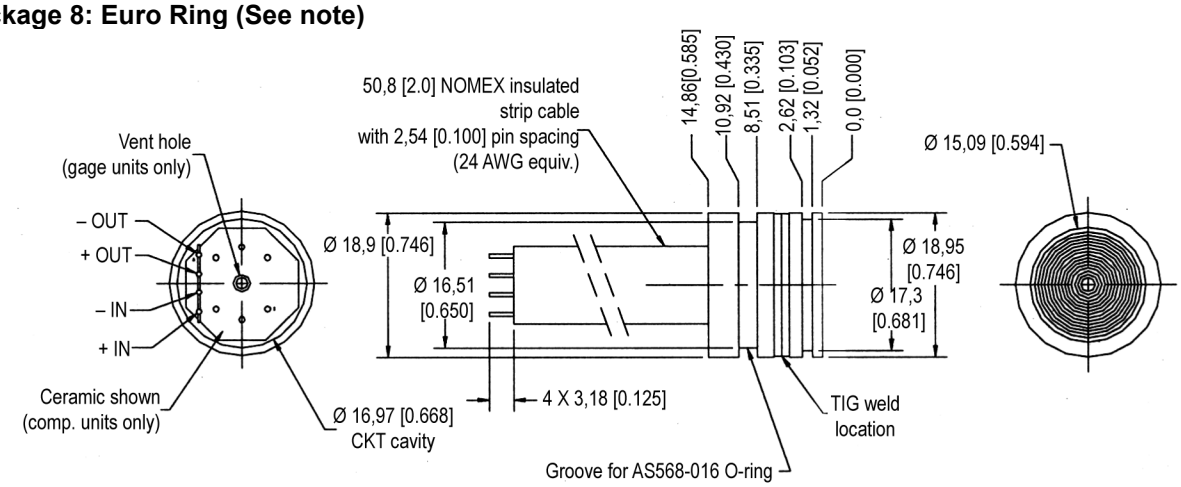

Note: Non-concentricity effects at the diaphragm weld area may cause runout of up to ±0.006 in between the upper and lower portions of the sensor body. (It is recommended to use a counter bore to mate with this device to allow for this non-concentricity).

Package 9: VCR Gland (Female nut)

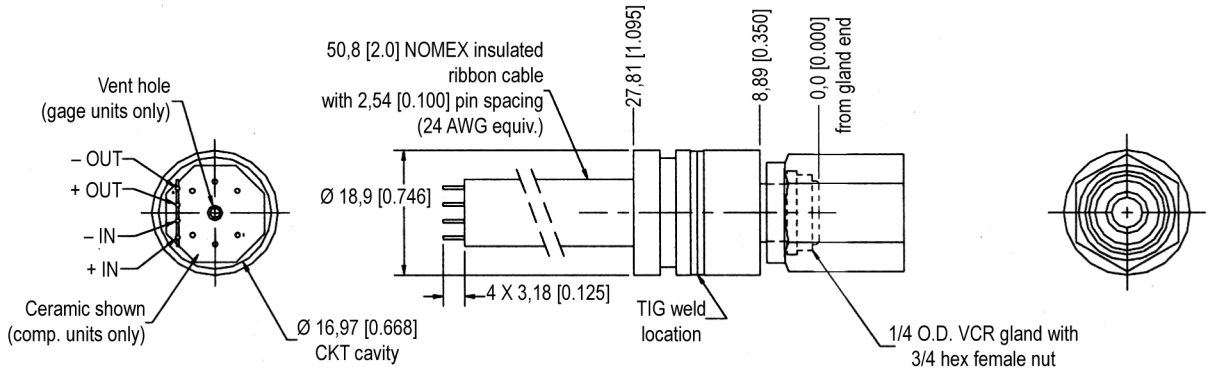

ORDERING INFORMATION

19C Series

19 C XXXP A,G 1,2...9 K,L

- 19 — 19mm cell
- C — C = Compensated
- XXXP — Pressure Range in (P) PSI
- A,G — A = Absolute Pressure; G = Gauge Pressure
- 1,2...9 — Pressure Connections:
  1 = Cell w/Body O-Ring
  2 = Flush Mount
  3 = Flush Mount w/ Flange
  4 = 1/8-27 NPT
  5 = 1/4-18 NPT
  6 = 7/16 UNF
  7 = 1/4 BSPP
  8 = Euro O-Ring
  9 = 1/4 VCR (Female Nut)
- K,L — K = 10 Vdc Excitation; L = 1.5 mA Excitation

For example: Part **#19C100PA4K** = 19 mm Cell, Compensated, 100 psi, Absolute, 1/8NPT Port with 10 Vdc excitation.

19U Series

19 U XXXP A,G 1,2...9 K

- 19 — 19mm cell
- U — U = Uncompensated
- XXXP — Pressure Range in (P) PSI
- A,G — A = Absolute Pressure; G = Gauge Pressure
- 1,2...9 — Pressure Connections:
  1 = Cell w/Body O-Ring
  2 = Flush Mount
  3 = Flush Mount w/ Flange
  4 = 1/8-27 NPT
  5 = 1/4-18 NPT
  6 = 7/16 UNF
  7 = 1/4 BSPP
  8 = Euro O-Ring
  9 = 1/4 VCR (Female Nut)
- K — 5 Vdc Excitation or 1.0 mA Excitation

For example: Part **#19U100PA4K** = 19 mm Cell, Uncompensated, 100 psi, Absolute, 1/8NPT Port with 5 Vdc excitation.

19 Vacuum Gauge Series

19 C,U XXXP V 1,2...9 K,L

- 19 — 19mm cell
- C,U — C = Compensated; U = Uncompensated
- XXXP — Pressure Range in (P) PSI
- V — V = Vacuum Gauge Pressure
- 1,2...9 — Pressure Connections:
  1 = Cell w/Body O-Ring
  2 = Flush Mount
  3 = Flush Mount w/ Flange
  4 = 1/8-27 NPT
  5 = 1/4-18 NPT
  6 = 7/16 UNF
  7 = 1/4 BSPP
  8 = Euro O-Ring
  9 = 1/4 VCR (Female Nut)
- K,L — K = Voltage Excitation; L = Current Excitation

For example: Part **#19C100PV4K** = 19 mm Cell, Comp., 100 psi, Vacuum Gauge, 1/8NPT Port with 10 Vdc excitation.

For example: Part **#19U100PV4K** = 19 mm Cell, Uncompensated, 100 psi, Absolute, 1/8NPT Port with 5 Vdc excitation.

WARRANTY/REMEDY
Honeywell warrants goods of its manufacture as being free of defective materials and faulty workmanship. Contact your local sales office for warranty information. If warranted goods are returned to Honeywell during the period of coverage, Honeywell will repair or replace without charge those items it finds defective. **The foregoing is Buyer's sole remedy and is in lieu of all other warranties, expressed or implied, including those of merchantability and fitness for a particular purpose.**
Specifications may change without notice. The information we supply is believed to be accurate and reliable as of this printing. However, we assume no responsibility for its use.

While we provide application assistance personally, through our literature and the Honeywell web site, it is up to the customer to determine the suitability of the product in the application.
For application assistance, current specifications, or name of the nearest Authorized Distributor, contact a nearby sales office. Or call:
1-800-537-6945 USA/Canada
1-815-235-6847 International
FAX
1-815-235-6545 USA
INTERNET
www.honeywell.com/sensing
info.sc@honeywell.com

Honeywell

Sensing and Control
www.honeywell.com/sensing
Honeywell
11 West Spring Street
Freeport, Illinois 61032

008132-1-EN IL50 GLO 1004 Printed in USA
Copyright 2004 Honeywell International Inc. All Rights Reserved.

Компания «ЭлектроПласт» предлагает заключение долгосрочных отношений при поставках импортных электронных компонентов на взаимовыгодных условиях!

Наши преимущества:

- Оперативные поставки широкого спектра электронных компонентов отечественного и импортного производства напрямую от производителей и с крупнейших мировых складов;
- Поставка более 17-ти миллионов наименований электронных компонентов;
- Поставка сложных, дефицитных, либо снятых с производства позиций;
- Оперативные сроки поставки под заказ (от 5 рабочих дней);
- Экспресс доставка в любую точку России;
- Техническая поддержка проекта, помощь в подборе аналогов, поставка прототипов;
- Система менеджмента качества сертифицирована по Международному стандарту ISO 9001;
- Лицензия ФСБ на осуществление работ с использованием сведений, составляющих государственную тайну;
- Поставка специализированных компонентов (Xilinx, Altera, Analog Devices, Intersil, Interpoint, Microsemi, Aeroflex, Peregrine, Syfer, Eurofarad, Texas Instrument, Miteq, Cobham, E2V, MA-COM, Hittite, Mini-Circuits,General Dynamics и др.);

Помимо этого, одним из направлений компании «ЭлектроПласт» является направление «Источники питания». Мы предлагаем Вам помощь Конструкторского отдела:

- Подбор оптимального решения, техническое обоснование при выборе компонента;
- Подбор аналогов;
- Консультации по применению компонента;
- Поставка образцов и прототипов;
- Техническая поддержка проекта;
- Защита от снятия компонента с производства.

Как с нами связаться

Телефон: 8 (812) 309 58 32 (многоканальный)
Факс: 8 (812) 320-02-42
Электронная почта: org@eplast1.ru
Адрес: 198099, г. Санкт-Петербург, ул. Калинина, дом 2, корпус 4, литера А.