Header Specification

INTRODUCTION

This document contains information about MPLAB® ICD 2 headers, which provide in-circuit debugging capabilities for specific Microchip devices.

A special ICD/ICE device is connected to a header board to be used with MPLAB ICD 2. This device is mounted on the top of a header and its signals are routed to the MPLAB ICD 2 connector (Figure 1). On the bottom of the header is a socket that is used to connect to the target board.

FIGURE 1: MPLAB® ICD 2 MODULE CONNECTION WITH PDIP HEADER

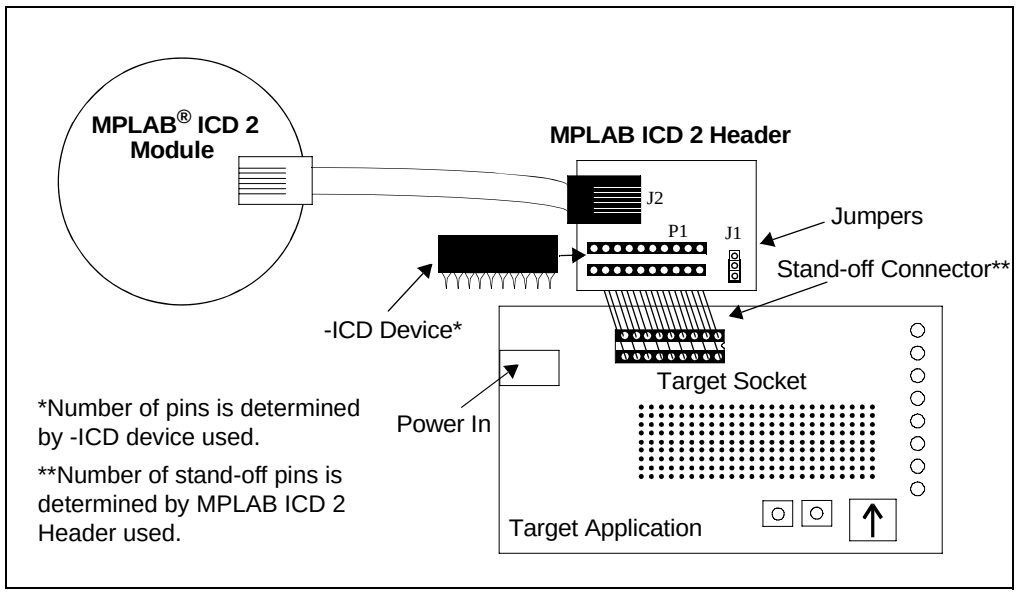

Special ICD/ICE versions of selected devices are needed to provide one or more of the following:

- the built-in debug circuitry that a device may lack
- additional pins for the clock, data and $\overline{\text{MCLR}}$ functions required for ICD
- dedicated program/data memory for ICD

ICD versions are labeled with an ICD suffix (*Device*-ICD). For some devices, ICE versions are available (*Device*-ICE) and may be used with MPLAB ICD 2 as ICD devices.

© 2005 Microchip Technology Inc.

HEADERS FOR ICD DEVICES

Some devices have no built-in debug circuitry. Therefore, special ICD versions of these devices are required for MPLAB ICD 2 operation.

Other devices have built-in debug circuitry and do not require a header to use MPLAB ICD 2. However, some pins and memory must be used to support the ICD function. Therefore, for some of these devices, special ICD versions offering additional pins (and sometimes memory) are available to provide more transparent debugging capabilities.

Currently-available headers and their associated ICD devices/supported devices are shown in Table 1.

TABLE 1: HEADER TYPES – ICD DEVICES

Header	Part Number	ICD Device Used	Devices Supported	V_{DD} Max
8 Pin	AC162050	PIC12F675-ICD(1)	PIC12F629/675	5.5
	AC162058	PIC12F683-ICD	PIC12F683	5.5
14 Pin	AC162052	PIC16F676-ICD(1)	PIC16F630/676	5.5
	AC162057	PIC16F636-ICD	PIC12F635, PIC16F636	5.5
	AC162055	PIC16F684-ICD	PIC16F684	5.5
	AC162056	PIC16F688-ICD	PIC16F688	5.5
	AC162059	PIC16F505-ICD	PIC10F200/2/4/6 PIC12F508/509 PIC16F505	5.5
	AC162070	PIC16F506-ICD	PIC10F220/2 PIC12F510 PIC16F506	5.5
18 Pin	AC162053	PIC16F648A-ICD(1)	PIC16F627A/628A/648A	5.5
	AC162054	PIC16F716-ICD	PIC16F716	5.5
20 Pin	AC162066	PIC16F636-ICD	PIC16F639 (Dual die)	5.5
	AC162060	PIC16F785-ICD	PIC16F785/HV785	5.5
	AC162061	PIC16F690-ICD	PIC16F631/677 PIC16F685/687/689/690	5.5

Note 1: These devices cannot be programmed or read using MPLAB® ICD 2 while GP1/RA1 is high (V_{IH}). Move circuitry that makes GP1/RA1 high to another I/O pin during development. See device programming specifications for more information.

© 2005 Microchip Technology Inc.

HEADERS FOR ICE DEVICES

Devices that have built-in debug circuitry do not require a header to use MPLAB ICD 2. However, some pins and memory must be used to support the ICD function. Special ICE versions offering additional pins, memory and emulator functions can be used to provide superior debugging capabilities.

Currently-available headers and their associated ICE devices/supported devices are shown in Table 2.

TABLE 2: HEADER TYPES – ICE DEVICES

Header	Part Number	ICE Device Used	Devices Supported	V_{DD} Max
64/80 Pin	AC162062	PIC18F87J10-ICE	PIC18F65J10/85J10 PIC18F65J15/85J15 PIC18F66J10/86J10 PIC18F66J15/86J15 PIC18F67J10/87J10	3.6

INSTALLATION

The MPLAB ICD 2 header is installed by following these steps:

1. Set up the header board.
2. Connect the header and MPLAB ICD 2.
3. Connect the header and the target board.

Set Up the Header Board

To set up a header board:

1. If the ICD device is not soldered onto the header, plug the ICD device into the socket on the top of the header.
2. Set any jumpers or switches to determine device functionality/selection as specified in the following sections.

8/14-PIN HEADERS

For some headers, device peripherals need to be selected by setting jumper J1 to the appropriate position. This will have the effect of selecting the device.

Device	Jumper Setting	Peripheral Function
PIC12F629	2-3	A/D Disabled
PIC12F675	1-2	A/D Enabled
PIC16F630	2-3	A/D Disabled
PIC16F676	1-2	A/D Enabled
PIC12F635	2-3	PORTC, Comparator 2 Disabled
PIC16F636	1-2	PORTC, Comparator 2 Enabled

18-PIN HEADERS

For these headers, there are no jumpers/switches. The device with the most program memory is always selected.

If PIC16F627A or PIC16F628A devices are selected for MPLAB ICD 2 development in MPLAB IDE, the warning “ICDWarn0020: Invalid target device id” may be received in the build window and as a dialog. The reason is the PIC16F648A-ICD device supports PIC16F648A, PIC16F627A and PIC16F628A, but only reports the device ID for the PIC16F648A.

Ignore this warning or disable it under the **Warnings** tab on the ICD Programming dialog.

20-PIN HEADER – PIC16F639

For the PIC16F639 20-pin header, you will need to connect the jumper J3 as specified below.

Tool	Jumper Setting	Function
MPLAB® ICE 2000	1-2	Run/program as regular device
MPLAB ICD 2	2-3	Run/program as ICD device

In addition to being used with MPLAB ICD 2, this header is used with the PCM16YM0 processor module to emulate a PIC16F639 on the MPLAB ICE 2000 in-circuit emulator. Plug the end of the processor module into the header, and then plug the header into the transition socket or directly onto the target board.

20-PIN HEADER – PIC16F785

For the PIC16F785 20-pin header, you will need to connect the jumper J2 to enable the shunt regulator.

Device	Jumper Setting	Function
PIC16F785	1-2	Disable shunt regulator
PIC16HV785	2-3	Enable shunt regulator

20-PIN HEADER – PIC16F690

For the PIC16F690 20-pin header, you will need to set the S1 switches (Figure 2) to enable peripherals and choose devices (Table 3).

FIGURE 2: S1 SWITCH HARDWARE

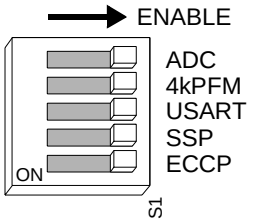

Switch configuration at left shows all peripherals enabled, which is the setting to select the PIC16F690 device.

© 2005 Microchip Technology Inc.

TABLE 3: S1 SWITCH SETTINGS

Device	Switches				
	ADC	4kPFM	USART	SSP	ECCP
PIC16F631	0	0*	0	0	0
PIC16F677	1	0**	0	1	0
PIC16F685	1	1	0	0	1
PIC16F687	1	0**	1	1	0
PIC16F689	1	1	1	1	0
PIC16F690	1	1	1	1	1

Legend: 1 = Enabled 0 = Disabled * = 1k PFM ** = 2k PFM

64/80-PIN HEADERS

For these headers, there are no jumpers/switches. MPLAB IDE will use its selected device to choose the correct device to emulate.

Test points are available on this header to check the following: V_{DD}, V_{DD}core and ground.

CAUTION

This header cannot be plugged directly into the PICDEM™ HPC Explorer Board or device damage will result.

The PICDEM™ HPC Explorer Board is 5V, whereas the ICD device on the header is 3.6V max. Therefore, modification to the demo board is necessary before the header can be used.

1. Switch S3 should be set to ICE.
2. Jumper J2 must be connected as shown to modify the operating voltage. See demo board documentation for more information.

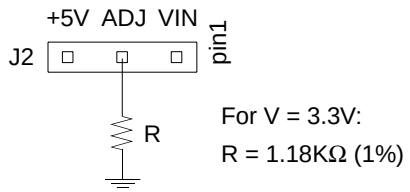

Connect the Header and MPLAB ICD 2

Connect the 9-inch modular interface cable between the MPLAB ICD 2 Module and the MPLAB ICD 2 Header.

Connect the Header and the Target Board

The header may be connected to the target board as follows:

- PDIP header socket to PDIP target socket with a stand-off (male-to-male connector)
- Header socket to plug on the target board
- Header socket to target socket with a transition socket (see *MPLAB® ICE 2000/4000 Transition Socket Specification*, DS51194)

PROGRAMMING NON-ICD DEVICES

The MPLAB ICD 2 header can only program the -ICD device, not the regular device. To program non-ICD devices with the MPLAB ICD 2, use the Universal Programming Module (AC162049) or design a modular interface connector on the target. See the appropriate specification for connections. For the most up-to-date device programming specifications, see the Microchip website (www.microchip.com).

CALIBRATION BITS

The calibration bits for the band gap and internal oscillator are always preserved by the MPLAB ICD 2 to their factory settings.

MPLAB ICD 2 PERFORMANCE

The PICmicro® MCU devices do not support partial program memory erase; therefore, users may experience slower MPLAB ICD 2 performance than with other devices.

ADDITIONAL INFORMATION

Please refer to the *MPLAB® ICD 2 In-Circuit Debugger User's Guide* (DS51331), MPLAB IDE Help and the MPLAB ICD 2 Readme for additional information.

SCHEMATICS

The following schematics show header electrical connections.

© 2005 Microchip Technology Inc.

FIGURE 3: 8/14/18-PIN HEADERS

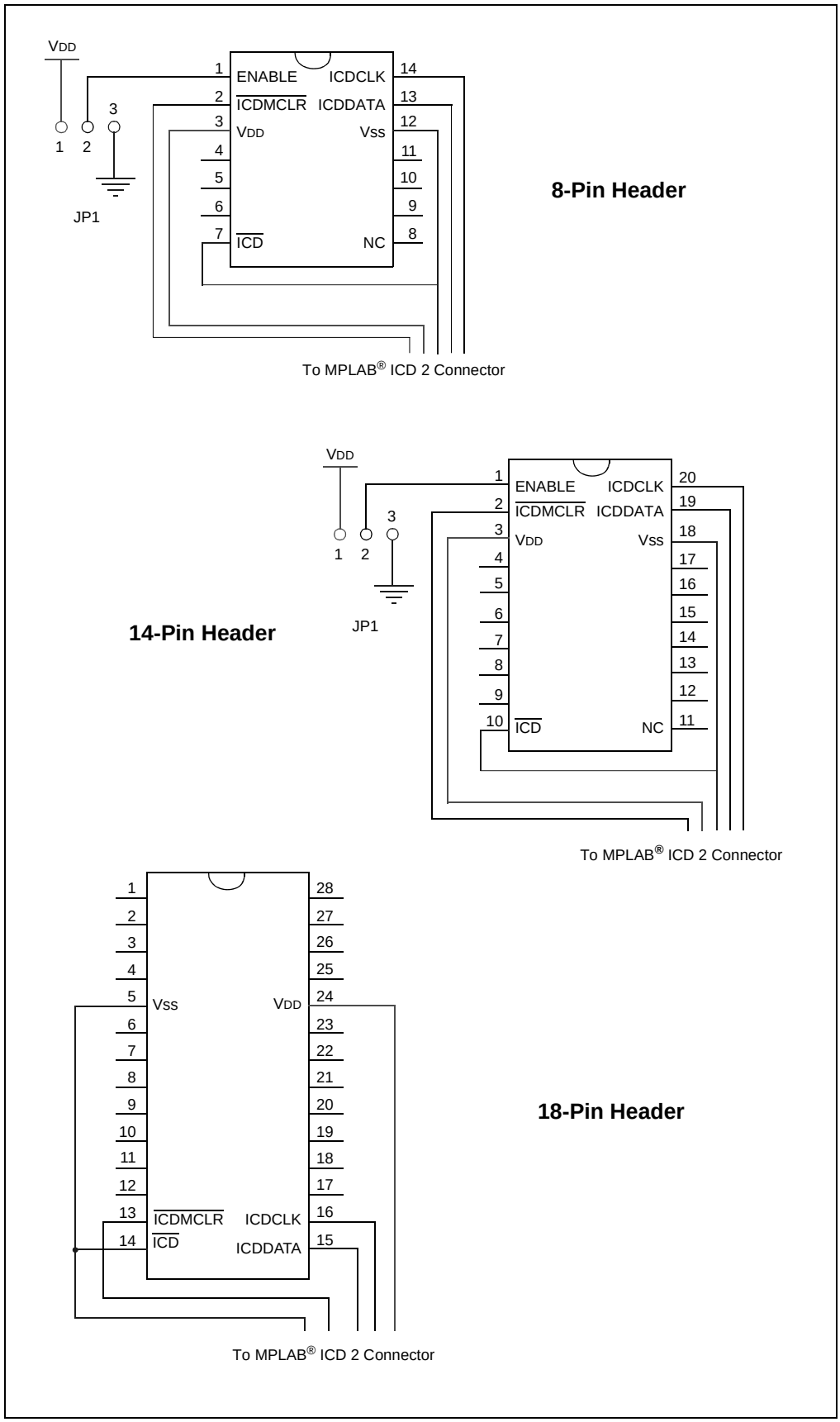

FIGURE 4: 20-PIN HEADERS

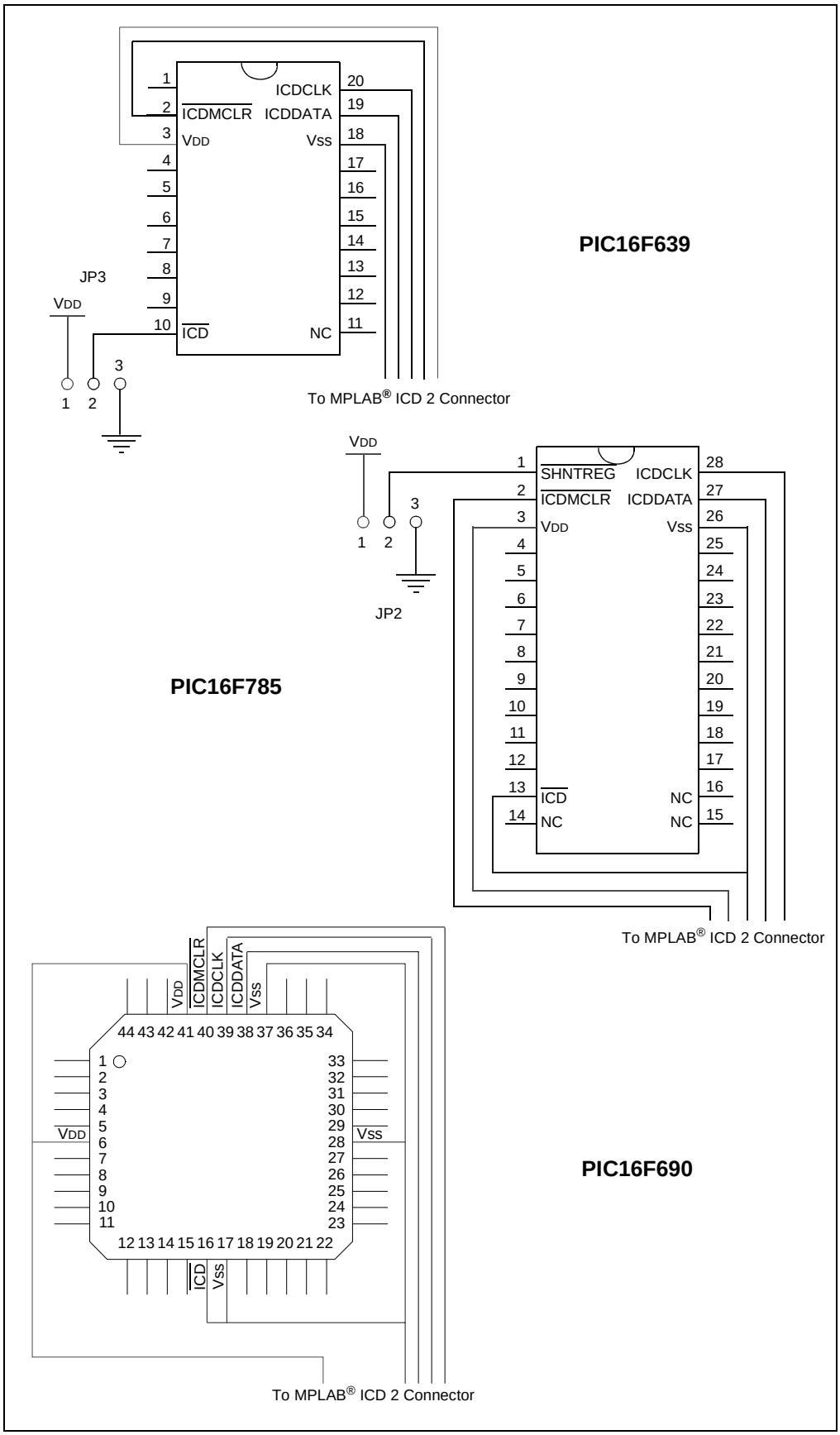

© 2005 Microchip Technology Inc.

FIGURE 5: 64/80-PIN HEADERS

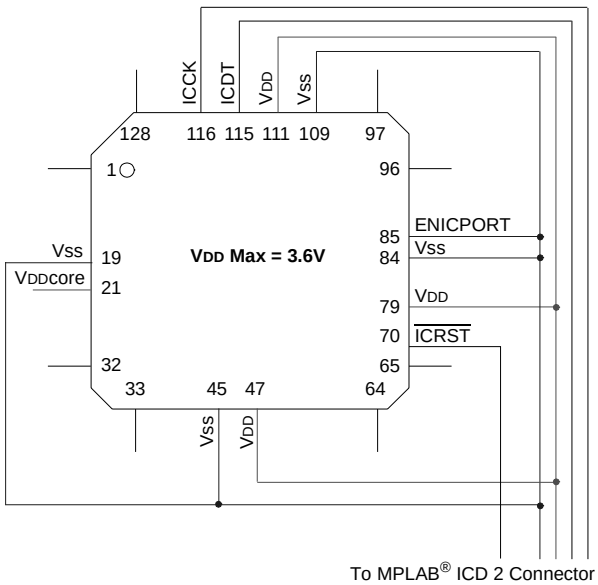

NOTES:

© 2005 Microchip Technology Inc.

Note the following details of the code protection feature on Microchip devices:

- Microchip products meet the specification contained in their particular Microchip Data Sheet.
- Microchip believes that its family of products is one of the most secure families of its kind on the market today, when used in the intended manner and under normal conditions.
- There are dishonest and possibly illegal methods used to breach the code protection feature. All of these methods, to our knowledge, require using the Microchip products in a manner outside the operating specifications contained in Microchip's Data Sheets. Most likely, the person doing so is engaged in theft of intellectual property.
- Microchip is willing to work with the customer who is concerned about the integrity of their code.
- Neither Microchip nor any other semiconductor manufacturer can guarantee the security of their code. Code protection does not mean that we are guaranteeing the product as "unbreakable."

Code protection is constantly evolving. We at Microchip are committed to continuously improving the code protection features of our products. Attempts to break Microchip's code protection feature may be a violation of the Digital Millennium Copyright Act. If such acts allow unauthorized access to your software or other copyrighted work, you may have a right to sue for relief under that Act.

Information contained in this publication regarding device applications and the like is provided only for your convenience and may be superseded by updates. It is your responsibility to ensure that your application meets with your specifications. MICROCHIP MAKES NO REPRESENTATIONS OR WARRANTIES OF ANY KIND WHETHER EXPRESS OR IMPLIED, WRITTEN OR ORAL, STATUTORY OR OTHERWISE, RELATED TO THE INFORMATION, INCLUDING BUT NOT LIMITED TO ITS CONDITION, QUALITY, PERFORMANCE, MERCHANTABILITY OR FITNESS FOR PURPOSE**.** Microchip disclaims all liability arising from this information and its use. Use of Microchip's products as critical components in life support systems is not authorized except with express written approval by Microchip. No licenses are conveyed, implicitly or otherwise, under any Microchip intellectual property rights.

Trademarks

The Microchip name and logo, the Microchip logo, Accuron, dsPIC, KEELOQ, microID, MPLAB, PIC, PICmicro, PICSTART, PRO MATE, PowerSmart, rfPIC, and SmartShunt are registered trademarks of Microchip Technology Incorporated in the U.S.A. and other countries.

AmpLab, FilterLab, Migratable Memory, MXDEV, MXLAB, PICMASTER, SEEVAL, SmartSensor and The Embedded Control Solutions Company are registered trademarks of Microchip Technology Incorporated in the U.S.A.

Analog-for-the-Digital Age, Application Maestro, dsPICDEM, dsPICDEM.net, dsPICworks, ECAN, ECONOMONITOR, FanSense, FlexROM, fuzzyLAB, In-Circuit Serial Programming, ICSP, ICEPIC, Linear Active Thermistor, MPASM, MPLIB, MPLINK, MPSIM, PICkit, PICDEM, PICDEM.net, PICLAB, PICtail, PowerCal, PowerInfo, PowerMate, PowerTool, rfLAB, rfPICDEM, Select Mode, Smart Serial, SmartTel, Total Endurance and WiperLock are trademarks of Microchip Technology Incorporated in the U.S.A. and other countries.

SQTP is a service mark of Microchip Technology Incorporated in the U.S.A.

All other trademarks mentioned herein are property of their respective companies.

© 2005, Microchip Technology Incorporated, Printed in the U.S.A., All Rights Reserved.

Printed on recycled paper.

QUALITY MANAGEMENT SYSTEM
CERTIFIED BY DNV
ISO/TS 16949:2002

Microchip received ISO/TS-16949:2002 quality system certification for its worldwide headquarters, design and wafer fabrication facilities in Chandler and Tempe, Arizona and Mountain View, California in October 2003. The Company's quality system processes and procedures are for its PICmicro® 8-bit MCUs, KEELOQ® code hopping devices, Serial EEPROMs, microperipherals, nonvolatile memory and analog products. In addition, Microchip's quality system for the design and manufacture of development systems is ISO 9001:2000 certified.

WORLDWIDE SALES AND SERVICE

AMERICAS

Corporate Office
2355 West Chandler Blvd.
Chandler, AZ 85224-6199
Tel: 480-792-7200
Fax: 480-792-7277
Technical Support:
http://support.microchip.com
Web Address:
www.microchip.com

Atlanta
Alpharetta, GA
Tel: 770-640-0034
Fax: 770-640-0307

Boston
Westborough, MA
Tel: 774-760-0087
Fax: 774-760-0088

Chicago
Itasca, IL
Tel: 630-285-0071
Fax: 630-285-0075

Dallas
Addison, TX
Tel: 972-818-7423
Fax: 972-818-2924

Detroit
Farmington Hills, MI
Tel: 248-538-2250
Fax: 248-538-2260

Kokomo
Kokomo, IN
Tel: 765-864-8360
Fax: 765-864-8387

Los Angeles
Mission Viejo, CA
Tel: 949-462-9523
Fax: 949-462-9608

San Jose
Mountain View, CA
Tel: 650-215-1444
Fax: 650-961-0286

Toronto
Mississauga, Ontario,
Canada
Tel: 905-673-0699
Fax: 905-673-6509

ASIA/PACIFIC

Australia - Sydney
Tel: 61-2-9868-6733
Fax: 61-2-9868-6755

China - Beijing
Tel: 86-10-8528-2100
Fax: 86-10-8528-2104

China - Chengdu
Tel: 86-28-8676-6200
Fax: 86-28-8676-6599

China - Fuzhou
Tel: 86-591-8750-3506
Fax: 86-591-8750-3521

China - Hong Kong SAR
Tel: 852-2401-1200
Fax: 852-2401-3431

China - Qingdao
Tel: 86-532-8502-7355
Fax: 86-532-8502-7205

China - Shanghai
Tel: 86-21-5407-5533
Fax: 86-21-5407-5066

China - Shenyang
Tel: 86-24-2334-2829
Fax: 86-24-2334-2393

China - Shenzhen
Tel: 86-755-8203-2660
Fax: 86-755-8203-1760

China - Shunde
Tel: 86-757-2839-5507
Fax: 86-757-2839-5571

China - Wuhan
Tel: 86-27-5980-5300
Fax: 86-27-5980-5118

China - Xian
Tel: 86-29-8833-7250
Fax: 86-29-8833-7256

ASIA/PACIFIC

India - Bangalore
Tel: 91-80-2229-0061
Fax: 91-80-2229-0062

India - New Delhi
Tel: 91-11-5160-8631
Fax: 91-11-5160-8632

India - Pune
Tel: 91-20-2566-1512
Fax: 91-20-2566-1513

Japan - Yokohama
Tel: 81-45-471- 6166
Fax: 81-45-471-6122

Korea - Gumi
Tel: 82-54-473-4301
Fax: 82-54-473-4302

Korea - Seoul
Tel: 82-2-554-7200
Fax: 82-2-558-5932 or
82-2-558-5934

Malaysia - Penang
Tel: 604-646-8870
Fax: 604-646-5086

Philippines - Manila
Tel: 632-634-9065
Fax: 632-634-9069

Singapore
Tel: 65-6334-8870
Fax: 65-6334-8850

Taiwan - Hsin Chu
Tel: 886-3-572-9526
Fax: 886-3-572-6459

Taiwan - Kaohsiung
Tel: 886-7-536-4818
Fax: 886-7-536-4803

Taiwan - Taipei
Tel: 886-2-2500-6610
Fax: 886-2-2508-0102

Thailand - Bangkok
Tel: 66-2-694-1351
Fax: 66-2-694-1350

EUROPE

Austria - Weis
Tel: 43-7242-2244-399
Fax: 43-7242-2244-393

Denmark - Copenhagen
Tel: 45-4450-2828
Fax: 45-4485-2829

France - Paris
Tel: 33-1-69-53-63-20
Fax: 33-1-69-30-90-79

Germany - Munich
Tel: 49-89-627-144-0
Fax: 49-89-627-144-44

Italy - Milan
Tel: 39-0331-742611
Fax: 39-0331-466781

Netherlands - Drunen
Tel: 31-416-690399
Fax: 31-416-690340

Spain - Madrid
Tel: 34-91-352-30-52
Fax: 34-91-352-11-47

UK - Wokingham
Tel: 44-118-921-5869
Fax: 44-118-921-5820

08/24/05

© 2005 Microchip Technology Inc.

Компания «ЭлектроПласт» предлагает заключение долгосрочных отношений при поставках импортных электронных компонентов на взаимовыгодных условиях!

Наши преимущества:

- Оперативные поставки широкого спектра электронных компонентов отечественного и импортного производства напрямую от производителей и с крупнейших мировых складов;
- Поставка более 17-ти миллионов наименований электронных компонентов;
- Поставка сложных, дефицитных, либо снятых с производства позиций;
- Оперативные сроки поставки под заказ (от 5 рабочих дней);
- Экспресс доставка в любую точку России;
- Техническая поддержка проекта, помощь в подборе аналогов, поставка прототипов;
- Система менеджмента качества сертифицирована по Международному стандарту ISO 9001;
- Лицензия ФСБ на осуществление работ с использованием сведений, составляющих государственную тайну;
- Поставка специализированных компонентов (Xilinx, Altera, Analog Devices, Intersil, Interpoint, Microsemi, Aeroflex, Peregrine, Syfer, Eurofarad, Texas Instrument, Miteq, Cobham, E2V, MA-COM, Hittite, Mini-Circuits,General Dynamics и др.);

Помимо этого, одним из направлений компании «ЭлектроПласт» является направление «Источники питания». Мы предлагаем Вам помощь Конструкторского отдела:

- Подбор оптимального решения, техническое обоснование при выборе компонента;
- Подбор аналогов;
- Консультации по применению компонента;
- Поставка образцов и прототипов;
- Техническая поддержка проекта;
- Защита от снятия компонента с производства.

Как с нами связаться

Телефон: 8 (812) 309 58 32 (многоканальный)
Факс: 8 (812) 320-02-42
Электронная почта: org@eplast1.ru
Адрес: 198099, г. Санкт-Петербург, ул. Калинина, дом 2, корпус 4, литера А.