NTC thermistors for temperature measurement

SMD NTC thermistors,
EIA case size 0603 (1608), standard series

Series/Type: **B573**V2**
Date: February 2019

© TDK Electronics AG 2019. Reproduction, publication and dissemination of this publication, enclosures hereto and the information contained therein without TDK Electronics' prior express consent is prohibited.

SMD

Applications

- Temperature measurement and compensation

Features

- Multilayer SMD NTC with inner electrodes
- Nickel barrier termination
- For temperature measurement up to 125 °C
- Excellent long-term aging stability in high temperature environment
- High mechanical robustness
- Short response time
- 100% Pb free
- UL approval (E69802)

Options

- Alternative resistance ratings, resistance tolerances and B value tolerances available on request.

Delivery mode

Cardboard tape, 180-mm reel (standard);
330-mm reel (on request)

Dimensional drawing

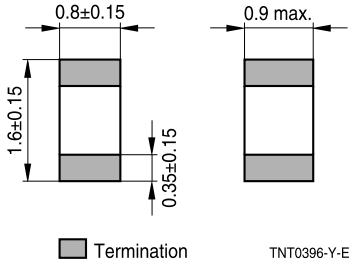

Dimensions in mm
Approx. weight 6 mg

General technical data

Operating temperature range		T_{op}	−55 ... 125	°C
Max. power	(at 25 °C, on PCB)	P_{25} 1)	180	mW
Resistance tolerance		$\Delta R_R/R_R$	±1, ±3, ±5	%
Rated temperature		T_R	25	°C
Dissipation factor	(on PCB)	δ_{th} 1)	approx. 3	mW/K
Thermal cooling time constant	(on PCB)	τ_c 1)	approx. 4	s
Heat capacity		C_{th} 1)	approx. 12	mJ/K

1) Depends on mounting situation

SMD

Electrical specification and ordering codes

R_{25} Ω	$\Delta R_R/R_R$ %	No. of R/T characteristic	$B_{25/50}$ K	$B_{25/85}$ K	$B_{25/100}$ K	Ordering code
1.0 k	±3, ±5	8502	3940	3980	4000 ±3%	B57321V2102+060
2.2 k	±3, ±5	8502	3940	3980	4000 ±3%	B57321V2222+060
4.7 k	±3, ±5	8500	3590	3635	3650 ±3%	B57301V2472+060
6.8 k	±3, ±5	8507	4386	4455	4480 ±3%	B57371V2682+060
10 k	±1, ±3, ±5	8509	3380	3435	3455 ±1%	B57330V2103+260
10 k	±3, ±5	8500	3590	3635	3650 ±3%	B57301V2103+060
10 k	±3, ±5	8502	3940	3980	4000 ±3%	B57321V2103+060
10 k	±3, ±5	8507	4386	4455	4480 ±3%	B57371V2103+060
22 k	±3, ±5	8502	3940	3980	4000 ±3%	B57321V2223+060
22 k	±3, ±5	8507	4386	4455	4480 ±3%	B57371V2223+060
47 k	±3, ±5	8502	3940	3980	4000 ±3%	B57321V2473+060
47 k	±1, ±3, ±5	8551	4050	4108	4131 ±1.5%	B57357V2473+560
47 k	±3, ±5	8551	4050	4108	4131 ±2%	B57358V2473+560
47 k	±3, ±5	8507	4386	4455	4480 ±3%	B57371V2473+060
68 k	±3, ±5	8507	4386	4455	4480 ±3%	B57371V2683+060
100 k	±1, ±3, ±5	8512	4200	4260	4282 ±1%	B57350V2104+460
100 k	±3, ±5	8552	4250	4311	4334 ±2%	B57358V2104+360
100 k	±1, ±3, ±5	8507	4386	4455	4480 ±1%	B57374V2104+060
100 k	±3, ±5	8507	4386	4455	4480 ±3%	B57371V2104+060
470 k	±3, ±5	8507	4386	4455	4480 ±3%	B57371V2474+060

+ = Resistance tolerance
F = ±1%
H = ±3%
J = ±5%

Reliability data

SMD NTC thermistors are tested in accordance with IEC 60068. The parts are mounted on a standardized PCB in accordance with IEC 60539-1.

Test	Standard	Test conditions	$\Delta R_{25}/R_{25}$ (typical)	Remarks
Storage in dry heat	IEC 60068-2-2 JIS C 0021	Storage at upper category temperature T: (125 ±2) °C t: 1000 h	< 2%	
Storage in damp heat, steady state	IEC 60068-2-78 JIS C 0022	Temperature of air: (40 ±2) °C Relative humidity of air: (93 +2/−3)% Duration: 56 days	< 2%	
Rapid temperature cycling	IEC 60068-2-14 JIS C 0025	Lower test temperature: −55 °C Upper test temperature: 125 °C Number of cycles: 100	< 2%	
Endurance		P_{max}: 180 mW T: (65 ±2) °C t: 1000 h	< 2%	
Solderability	IEC 60068-2-58 JIS C 0054	Solderability: (215 ±3) °C, (3 ±0.3) s (245 ±5) °C, (3 ±0.3) s Resistance to soldering heat: (260 ±5) °C, (10 ±1) s		95% of terminations wetted
Resistance drift after soldering		Reflow soldering profile Wave soldering profile	< 1%	

R/T characteristics

R/T No.	8500		8502		8507	
T (°C)	$B_{25/100}$ = 3650 K		$B_{25/100}$ = 4000 K		$B_{25/100}$ = 4480 K	
	R_T/R_{25}	α (%/K)	R_T/R_{25}	α (%/K)	R_T/R_{25}	α (%/K)
−55.0	63.917	6.8	96.158	7.4	142.71	7.9
−50.0	45.889	6.5	66.892	7.1	96.913	7.6
−45.0	33.344	6.3	47.127	6.9	66.637	7.4
−40.0	24.504	6.1	33.606	6.6	46.366	7.1
−35.0	18.201	5.8	24.243	6.4	32.629	6.9
−30.0	13.657	5.6	17.681	6.2	23.213	6.7
−25.0	10.347	5.5	13.032	6.0	16.686	6.5
−20.0	7.9114	5.3	9.702	5.8	12.115	6.3
−15.0	6.1019	5.1	7.2923	5.6	8.8803	6.1
−10.0	4.7454	4.9	5.5314	5.4	6.5692	5.9
−5.0	3.7198	4.8	4.2325	5.3	4.9025	5.8
0.0	2.938	4.6	3.2657	5.1	3.6896	5.6
5.0	2.3372	4.5	2.54	4.9	2.7994	5.4
10.0	1.8722	4.4	1.9907	4.8	2.1406	5.3
15.0	1.5096	4.2	1.5716	4.7	1.6492	5.1
20.0	1.2249	4.1	1.2494	4.5	1.2798	5.0
25.0	1.0000	4.0	1.0000	4.4	1.0000	4.9
30.0	0.82111	3.9	0.80552	4.3	0.78663	4.7
35.0	0.67798	3.8	0.65288	4.1	0.62277	4.6
40.0	0.56279	3.7	0.53229	4.0	0.4961	4.5
45.0	0.46958	3.6	0.43645	3.9	0.39757	4.4
50.0	0.39374	3.5	0.35981	3.8	0.32044	4.3
55.0	0.33171	3.4	0.29819	3.7	0.2597	4.1
60.0	0.28073	3.3	0.24837	3.6	0.21161	4.0
65.0	0.23863	3.2	0.20787	3.5	0.17331	3.9
70.0	0.2037	3.1	0.17479	3.4	0.14265	3.8
75.0	0.17459	3.0	0.14763	3.3	0.11799	3.8
80.0	0.15022	3.0	0.12523	3.2	0.098035	3.7
85.0	0.12975	2.9	0.10667	3.2	0.081823	3.6
90.0	0.11247	2.8	0.091227	3.1	0.068589	3.5
95.0	0.097838	2.8	0.078319	3.0	0.057735	3.4
100.0	0.085396	2.7	0.067488	2.9	0.048796	3.3
105.0	0.074781	2.6	0.058363	2.9	0.041403	3.2
110.0	0.065691	2.6	0.050647	2.8	0.035263	3.2
115.0	0.057883	2.5	0.044098	2.7	0.030143	3.1
120.0	0.051153	2.4	0.03852	2.7	0.025858	3.0
125.0	0.045335	2.4	0.033752	2.6	0.022258	3.0
130.0	0.040289	2.3	0.029663	2.6	0.019223	2.9
135.0	0.0359	2.3	0.026146	2.5	0.016655	2.8
140.0	0.032071	2.2	0.023111	2.4	0.014476	2.8
145.0	0.028723	2.2	0.020484	2.4	0.012619	2.7
150.0	0.025786	2.1	0.018203	2.3	0.011033	2.7

SMD

R/T characteristics

R/T No.	8509		8512		8551	
T (°C)	$B_{25/100}$ = 3455 K		$B_{25/100}$ = 4282 K		$B_{25/100}$ = 4131 K	
	R_T/R_{25}	α (%/K)	R_T/R_{25}	α (%/K)	R_T/R_{25}	α (%/K)
−55.0	44.605	5.9	130.38	8.0	111.73	7.8
−50.0	33.281	5.8	88.097	7.7	76.28	7.5
−45.0	25.044	5.6	60.444	7.4	52.88	7.2
−40.0	19.003	5.4	42.065	7.1	37.187	6.9
−35.0	14.536	5.3	29.666	6.9	26.498	6.7
−30.0	11.206	5.1	21.185	6.6	19.117	6.4
−25.0	8.7041	5.0	15.307	6.4	13.954	6.2
−20.0	6.8104	4.8	11.183	6.2	10.297	6.0
−15.0	5.3665	4.7	8.2558	6.0	7.677	5.8
−10.0	4.2576	4.6	6.1553	5.8	5.780	5.6
−5.0	3.4001	4.4	4.6324	5.6	4.3916	5.4
0.0	2.7326	4.3	3.5175	5.4	3.3661	5.2
5.0	2.2096	4.2	2.6935	5.3	2.6014	5.1
10.0	1.7973	4.1	2.0792	5.1	2.0262	4.9
15.0	1.4703	4.0	1.6173	4.9	1.5901	4.8
20.0	1.2093	3.9	1.2673	4.8	1.2567	4.6
25.0	1.0000	3.7	1.0000	4.7	1.0000	4.5
30.0	0.83113	3.6	0.79435	4.5	0.8009	4.4
35.0	0.69418	3.6	0.63504	4.4	0.6454	4.3
40.0	0.58255	3.5	0.51079	4.3	0.5232	4.1
45.0	0.49112	3.4	0.41327	4.2	0.42650	4.0
50.0	0.41587	3.3	0.33625	4.1	0.34959	3.9
55.0	0.35365	3.2	0.27507	4.0	0.28804	3.8
60.0	0.30197	3.1	0.22618	3.9	0.23851	3.7
65.0	0.25888	3.0	0.18692	3.8	0.19844	3.6
70.0	0.22278	3.0	0.15521	3.7	0.16587	3.5
75.0	0.19243	2.9	0.12948	3.6	0.13926	3.5
80.0	0.16681	2.8	0.10850	3.5	0.11742	3.4
85.0	0.1451	2.8	0.091301	3.4	0.09941	3.3
90.0	0.12663	2.7	0.077149	3.3	0.08449	3.2
95.0	0.11088	2.6	0.065451	3.2	0.07209	3.1
100.0	0.097381	2.6	0.055740	3.2	0.06174	3.1
105.0	0.085788	2.5	0.047647	3.1	0.05305	3.0
110.0	0.075795	2.4	0.040874	3.0	0.04575	2.9
115.0	0.067155	2.4	0.035186	3.0	0.039583	2.9
120.0	0.059663	2.3	0.030391	2.9	0.034356	2.8
125.0	0.053146	2.3	0.026334	2.8	0.029912	2.7
130.0	0.047463	2.2	0.022890	2.8	0.026120	2.7
135.0	0.042493	2.2	0.019957	2.7	0.022875	2.6
140.0	0.038134	2.1	0.017451	2.7	0.020089	2.6
145.0	0.034302	2.1	0.015303	2.6	0.017690	2.5
150.0	0.030925	2.1	0.013456	2.5	0.015619	2.5

R/T characteristics

R/T No.	8552							
T (°C)	$B_{25/100}$ = 4334 K		T (°C)	$B_{25/100}$ = 4334 K		T (°C)	$B_{25/100}$ = 4334 K	
	R_T/R_{25}	α (%/K)		R_T/R_{25}	α (%/K)		R_T/R_{25}	α (%/K)
−55.0	138.15	8.1	15.0	1.6266	5.0	85.0	0.088735	3.4
−50.0	92.920	7.8	20.0	1.2709	4.9	90.0	0.074831	3.4
−45.0	63.468	7.5	25.0	1.0000	4.7	95.0	0.063360	3.3
−40.0	43.979	7.2	30.0	0.79218	4.6	100.0	0.053856	3.2
−35.0	30.888	6.9	35.0	0.63161	4.5	105.0	0.045950	3.1
−30.0	21.969	6.7	40.0	0.50672	4.3	110.0	0.039346	3.1
−25.0	15.812	6.5	45.0	0.40894	4.2	115.0	0.033810	3.0
−20.0	11.509	6.2	50.0	0.33191	4.1	120.0	0.029151	2.9
−15.0	8.4659	6.0	55.0	0.27087	4.0	125.0	0.025217	2.9
−10.0	6.2899	5.8	60.0	0.22222	3.9	130.0	0.021882	2.8
−5.0	4.7178	5.7	65.0	0.18322	3.8	135.0	0.019047	2.7
0.0	3.5705	5.5	70.0	0.15181	3.7	140.0	0.016628	2.7
5.0	2.7255	5.3	75.0	0.12637	3.6	145.0	0.014559	2.6
10.0	2.0974	5.2	80.0	0.10566	3.5	150.0	0.012782	2.6

Taping and packing

1 Taping of SMD NTC thermistors

Tape and reel packing according to IEC 60286-3.
Tape material: Cardboard or blister, tape width 8 ±0.30 mm

2 Reel packing

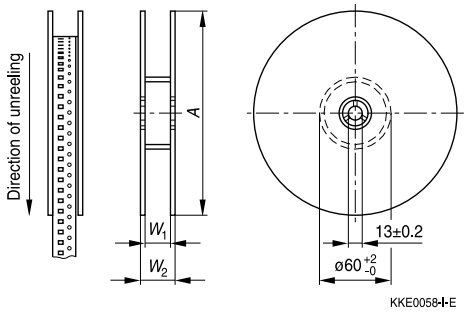

Dimensions in mm

	8-mm tape	
	180-mm reel	330-mm reel
A	180 +0/−3	330 +0/−2.0
W_1	8.4 +1.5/−0	8.4 +1.5/−0
W_2	14.4 max.	14.4 max.

Leader, trailer

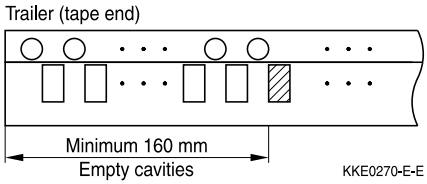

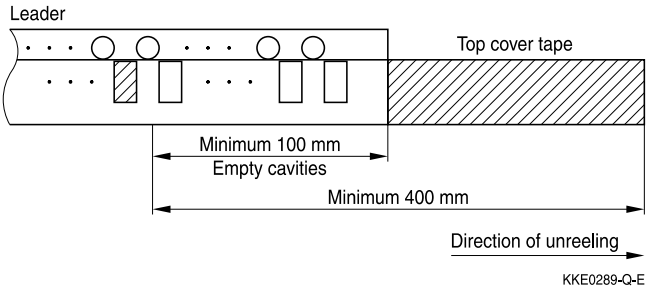

Packing units for discrete chip

	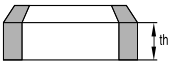	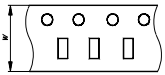			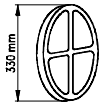
Case size inch/mm	Chip thickness th	Cardboard tape W	Blister tape W	∅ 180-mm reel pcs.	∅ 330-mm reel pcs.
0402/1005	0.5 mm	8 mm	–	10000	50000
0603/1608	0.8 mm	8 mm	8 mm	4000	16000
0805/2012	0.8 mm	–	8 mm	2000/ 4000	16000
	1.2 mm	–	8 mm	3000	12000
1206/3216	0.8 mm	–	8 mm	2000	12000
	1.2 mm	–	8 mm	4000	12000

3 Packing codes

The last two digits of the complete ordering code state the packing mode:

Last two digits			
60	SMD	Cardboard tape	180-mm reel packing
62	SMD	Blister tape	180-mm reel packing
70	SMD	Cardboard tape	330-mm reel packing
72	SMD	Blister tape	330-mm reel packing

4 Taping of radial leaded NTC thermistors

Dimensions and tolerances

Lead spacing F = 2.5 mm and 5.0 mm (taping to IEC 60286-2)

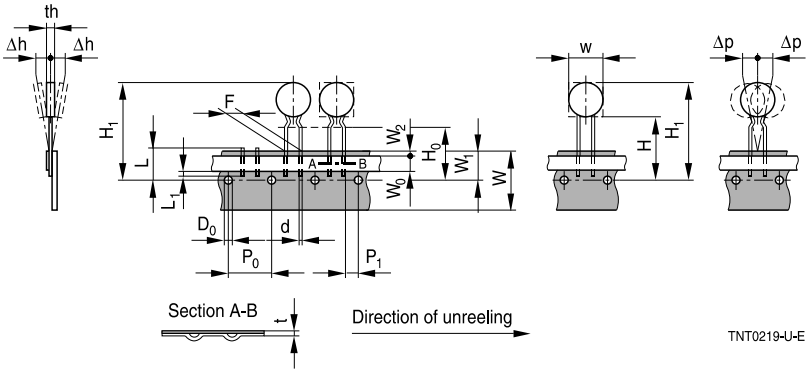

Dimensions (mm)

	Lead spacing 2.5 mm	Lead spacing 5 mm	Tolerance of lead spacing 2.5/5 mm	Remarks
w	11.0	11.5	max.	
th	5.0	6.0	max.	
d	0.5/0.6	0.5/0.6	±0.05	
P_0	12.7	12.7	±0.3	±1 mm / 20 sprocket holes
P_1	5.1	3.85	±0.7	
F	2.5	5.0	+0.6/−0.1	
Δh	0	0	±2.0	measured at top of component body
Δp	0	0	±1.3	
W	18.0	18.0	±0.5	
W_0	5.5	5.5	min.	peel-off force ≥5 N
W_1	9.0	9.0	+0.75/−0.5	
W_2	3.0	3.0	max.	
H	18.0	18.0	+2.0/−0	
H_0	16.0	16.0	±0.5	
H_1	32.2	32.2	max.	
D_0	4.0	4.0	±0.2	
t	0.9	0.9	max.	without wires
L	11.0	11.0	max.	
L_1	4.0	4.0	max.	

Types of packing

Ammo packing

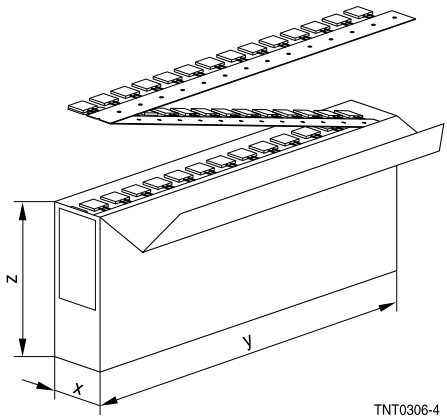

Ammo type	x	y	z
I	80	240	210

Packing unit: 1000 - 2000 pcs./reel

Reel packing

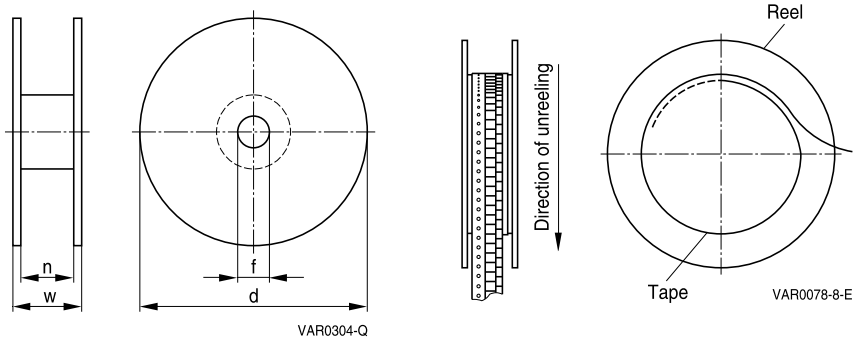

Packing unit: 1000 - 2000 pcs./reel

Reel dimensions (in mm)

Reel type	d	f	n	w
I	360 max.	31 ±1	approx. 45	54 max.

Cassette packing

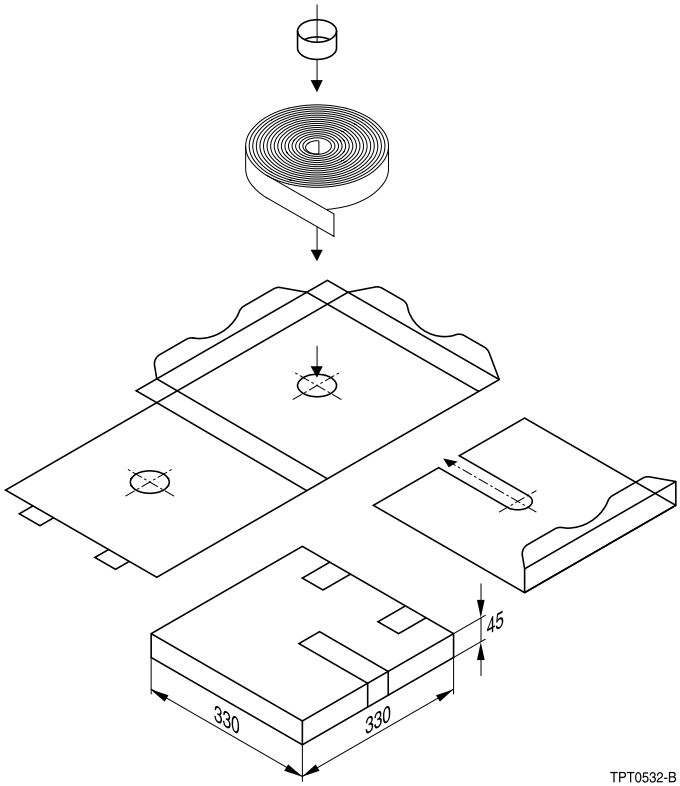

Packing unit: 1000 - 2000 pcs./cassette

Bulk packing
The components are packed in cardboard boxes, the size of which depends on the order quantity.

5 Packing codes

The last two digits of the complete ordering code state the packing mode:

Last two digits			
00, 01, 02, 03,04, 05, 06, 07, 08	–	Bulk	–
40, 41	–	Bulk	–
45	–	Bulk	–
50	Radial leads, kinked	Cardboard tape	Cassette packing
51	Radial leads, kinked	Cardboard tape	360-mm reel packing
52	Radial leads, straight	Cardboard tape	Cassette packing
53	Radial leads, straight	Cardboard tape	360-mm reel packing
54	Radial leads, kinked	Cardboard tape	AMMO packing
55	Radial leads, straight	Cardboard tape	AMMO packing

(If no packing code is indicated, this corresponds to 40)

Example 1:	B57164K0102J000	Bulk
	B57164K0102J052	Cardboard tape, cassette packing
Example 2:	B57881S0103F002	Bulk
	B57881S0103F251	Cardboard tape, reel packing

Mounting instructions

1 Soldering

1.1 Leaded NTC thermistors

Leaded thermistors comply with the solderability requirements specified by CECC.

When soldering, care must be taken that the NTC thermistors are not damaged by excessive heat. The following maximum temperatures, maximum time spans and minimum distances have to be observed:

	Dip soldering	*Iron soldering*
Bath temperature	max. 260 °C	max. 360 °C
Soldering time	max. 4 s	max. 2 s
Distance from thermistor	min. 6 mm	min. 6 mm

Under more severe soldering conditions the resistance may change.

1.1.1 Wave soldering

Temperature characteristic at component terminal with dual wave soldering

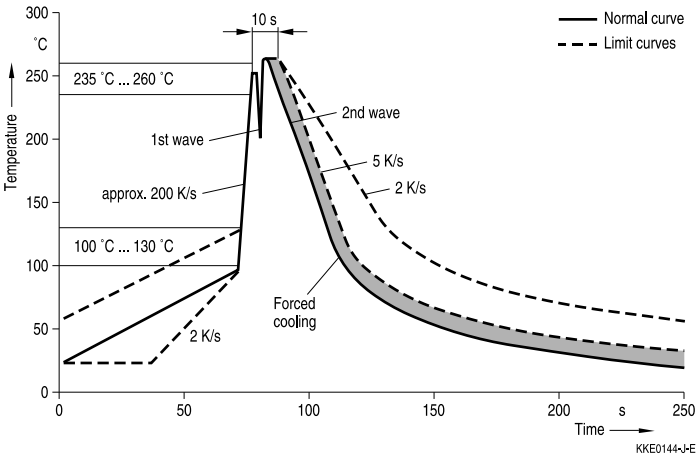

1.2 Leadless NTC thermistors

In case of NTC thermistors without leads, soldering is restricted to devices which are provided with a solderable metallization. The temperature shock caused by the application of hot solder may produce fine cracks in the ceramic, resulting in changes in resistance.

To prevent leaching of the metallization, solder with silver additives or with a low tin content should be used. In addition, soldering methods should be employed which permit short soldering times.

1.3 SMD NTC thermistors

SMD NTC thermistors can be provided with a nickel barrier termination or on special request with silver-palladium termination. The use of no-clean solder products is recommended. In any case mild, non-activated fluxes should be used. Flux residues after soldering should be minimized.

- SMD NTCs with AgPd termination are not approved for lead-free soldering.
- Nickel barrier termination

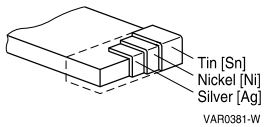

Figure 1
SMD NTC thermistors, structure of nickel barrier termination

The nickel barrier layer of the silver/nickel/tin termination (see figure 1) prevents leaching of the silver base metallization layer. This allows great flexibility in the selection of soldering parameters.

The tin prevents the nickel layer from oxidizing and thus ensures better wetting by the solder. The nickel barrier termination is tested for all commonly-used soldering methods according to IEC 60068-2-58. Insufficient preheating may cause ceramic cracks. Rapid cooling by dipping in solvent is not recommended.

The following test and process conditions apply for nickel barrier termination.

1.3.1 Solderability (test to IEC 60068-2-58)

Preconditioning: Immersion into flux F-SW 32.
Evaluation criterion: Wetting of soldering areas ≥95%.

Solder	Bath temperature (°C)	Dwell time (s)
SnPb 60/40	215 ±3	3 ±0.3
SnAg (3.0 ... 4.0), Cu (0.5 ... 0.9)	245 ±3	3 ±0.3

1.3.2 Resistance to soldering heat (test to IEC 60068-2-58)

Preconditioning: Immersion into flux F-SW 32.
Evaluation criterion: Leaching of side edges ≤1/3.

Solder	Bath temperature (°C)	Dwell time (s)
SnPb 60/40	260 ±5	10 ±1
SnAg (3.0 ... 4.0), Cu (0.5 ... 0.9)	260 ±5	10 ±1

1.3.3 Reflow soldering

Temperature ranges for reflow soldering acc. to IEC 60068-2-58 recommendations.

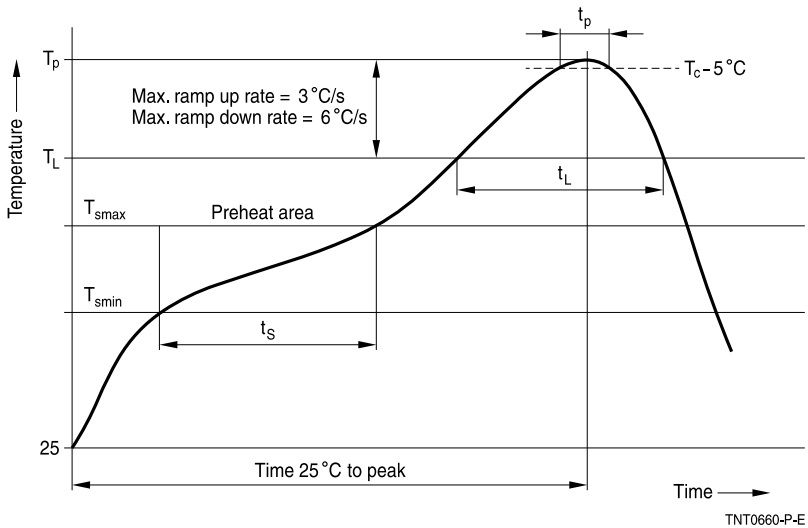

Profile feature		Sn-Pb eutectic assembly	Pb-free assembly
Preheat and soak - Temperature min - Temperature max - Time	 T_{smin} T_{smax} t_{smin} to t_{smax}	 100 °C 150 °C 60 ... 120 s	 150 °C 200 °C 60 ... 120 s
Average ramp-up rate	T_{smax} to T_p	3 °C/ s max.	3 °C/ s max.
Liquidous temperature Time at liquidous	T_L t_L	183 °C 40 ... 150 s	217 °C 40 ... 150 s
Peak package body temperature	T_p	215 °C ... 260 °C[1)]	235 °C ... 260 °C
Time above (T_P −5 °C)	t_p	10 ... 40 s	10 ... 40 s
Average ramp-down rate	T_p to T_{smax}	6 °C/ s max.	6 °C/ s max.
Time 25 °C to peak temperature		max. 8 minutes	max. 8 minutes

1) Depending on package thickness.

Notes: All temperatures refer to topside of the package, measured on the package body surface.
Number of reflow cycles: 3
Iron soldering should be avoided, hot air methods are recommended for repair purposes.

Solder joint profiles for silver/nickel/tin terminations

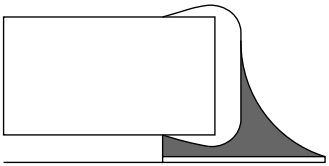

Good solder joint TNT0565-G-E

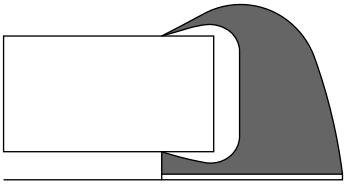

Too much solder
Pad geometry too large KKE0071-A-E

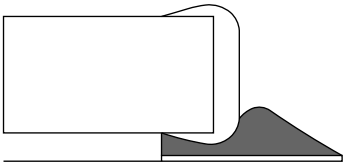

Poor wetting KKE0072-I-E

1.3.4 Recommended geometry of solder pads

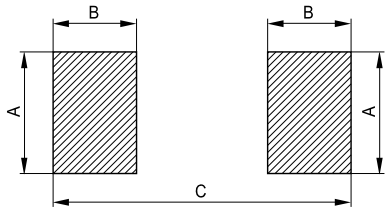

KKE0092-X

Recommended maximum dimensions (mm)

Case size inch/mm	A	B	C
0402/1005	0.6	0.6	1.7
0603/1608	1.0	1.0	3.0
0805/2012	1.3	1.2	3.4
1206/3216	1.8	1.2	4.5

2 Conductive adhesion

An alternative to soldering for silver-palladium terminated components is the gluing of thermistors with conductive adhesives. The benefit of this method is that it involves no thermal stress. The adhesives used must be chemically inert.

3 Clamp contacting

Pressure contacting by means of clamps is particularly suitable for applications involving frequent switching and high turn-on powers.

4 Robustness of terminations (leaded types)

The leads meet the requirements of IEC 60068-2-21. They may not be bent closer than 4 mm from the solder joint on the thermistor body or from the point at which they leave the feed-throughs. During bending, any mechanical stress at the outlet of the leads must be removed. The bending radius should be at least 0.75 mm.

Tensile strength: Test Ua1:

Value of applied force for Ua1 test:

Diameter (d) of corresponding round leads	Force with tolerance of ±10%
∅ ≤ 0.25 mm	1.0 N
0.25 < ∅ ≤ 0.35 mm	2.5 N
0.35 < ∅ ≤ 0.50 mm	5.0 N
0.50 < ∅ ≤ 0.80 mm	10.0 N

Bending strength: Test Ub:

Two 90°-bends in opposite directions

Value of applied force for Ub test:

Diameter (d) of corresponding round leads	Force with tolerance of ±10%
∅ ≤ 0.25 mm	0.5 N
0.25 < ∅ ≤ 0.35 mm	1.25 N
0.35 < ∅ ≤ 0.50 mm	2.5 N
0.50 < ∅ ≤ 0.80 mm	5 N

Torsional strength: Test Uc: severity 2

The lead is bent by 90° at a distance of 6 to 6.5 mm from the thermistor body.

The bending radius of the leads should be approx. 0.75 mm. Two torsions of 180° each (severity 2).

When subjecting leads to mechanical stress, the following should be observed:

Tensile stress on leads

During mounting and operation tensile forces on the leads are to be avoided.

Bending of leads

Bending of the leads directly on the thermistor body is not permissible.

A lead may be bent at a minimum distance of twice the wire's diameter +4 mm from the solder joint on the thermistor body. During bending the wire must be mechanically relieved at its outlet. The bending radius should be at least 0.75 mm.

5 Sealing and potting

Sealing or potting processes can affect the reliability of the component.

When thermistors are sealed, potted or overmolded, there must be no mechanical stress caused by thermal expansion during the production process (curing / overmolding process) and during later operation. The upper category temperature of the thermistor must not be exceeded. Ensure that the materials used (sealing / potting compound and plastic material) are chemically neutral. As thermistors are temperature sensitive components it should be considered that molding can affect the thermal surrounding and may influence e.g. the response time.

Extensive testing is encouraged in order to determine whether overmolding or potting influences the functionality and/ or reliability of the component.

6 Cleaning

Cleaning processes can affect the reliability of the component.

If cleaning is necessary, mild cleaning agents are recommended. Cleaning agents based on water are not allowed. Washing processes may damage the product due to the possible static or cyclic mechanical loads (e.g. ultrasonic cleaning). They may cause cracks which might lead to reduced reliability and/ or lifetime.

7 Storage

In order to maintain their solderability, thermistors must be stored in a non-corrosive atmosphere. Humidity, temperature and container materials are critical factors.

Do not store SMDs where they are exposed to heat or direct sunlight. Otherwise, the packing material may be deformed or SMDs may stick together, causing problems during mounting. After opening the factory seals, such as polyvinyl-sealed packages, use the SMDs as soon as possible.

The components should be left in the original packing. Touching the metallization of unsoldered thermistors may change their soldering properties.

Storage temperature:	−25 °C up to 45 °C
Relative humidity (without condensation):	≤75% annual mean
	<95%, maximum 30 days per annum

Solder the thermistors listed in this data book after shipment from TDK within the time specified:

SMDs with AgPd termination:	6 months
SMDs with nickel barrier termination:	12 months
Leadless components:	12 months
Leaded components:	24 months

8 Placement and orientation of SMD NTC thermistors on PCB

a) Component placement

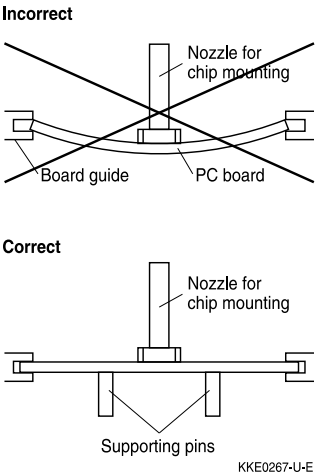

It is recommended that the PC board should be held by means of some adequate supporting pins such as shown left to prevent the SMDs from being damaged or cracked.

b) Cracks

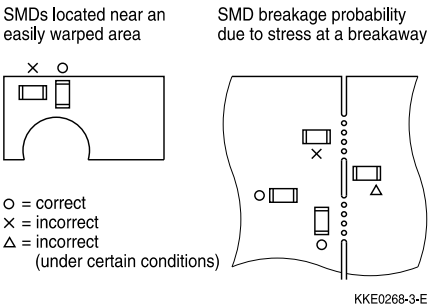

When placing a component near an area which is apt to bend or a grid groove on the PC board, it is advisable to have both electrodes subjected to uniform stress, or to position the component's electrodes at right angles to the grid groove or bending line (see c) Component orientation).

c) Component orientation

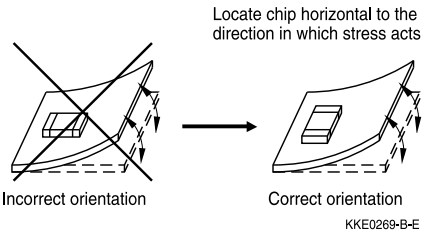

Choose a mounting position that minimizes the stress imposed on the chip during flexing or bending of the board.

Cautions and warnings

General

See "Important notes" at the end of this document.

Storage

- Store thermistors only in original packaging. Do not open the package prior to processing.
- Storage conditions in original packaging: storage temperature −25 °C ... +45 °C, relative humidity ≤75% annual mean, <95% maximum 30 days per annum, dew precipitation is inadmissible.
- Do not store thermistors where they are exposed to heat or direct sunlight. Otherwise, the packing material may be deformed or components may stick together, causing problems during mounting.
- Avoid contamination of thermistor surface during storage, handling and processing.
- Avoid storage of thermistors in harmful environments like corrosive gases (SO_x, Cl etc).
- Use the components as soon as possible after opening the original packaging.
- Solder thermistors within the time specified after shipment from TDK.
  For leaded components this is 24 months, for SMD components with nickel barrier termination 12 months, for leadless components this is 12 months, for SMD components with AgPd termination 6 months.

Handling

- NTC thermistors must not be dropped. Chip-offs or any other damage must not be caused during handling of NTCs.
- Do not touch components with bare hands. Gloves are recommended.
- Avoid contamination of thermistor surface during handling.
- Washing processes may damage the product due to the possible static or cyclic mechanical loads (e.g. ultrasonic cleaning). They may cause cracks to develop on the product and its parts, which might lead to reduced reliability or lifetime.

Bending / twisting leads

- A lead (wire) may be bent at a minimum distance of twice the wire's diameter plus 4 mm from the component head or housing. When bending ensure the wire is mechanically relieved at the component head or housing. The bending radius should be at least 0.75 mm.

Soldering

- Use resin-type flux or non-activated flux.
- Insufficient preheating may cause ceramic cracks.
- Rapid cooling by dipping in solvent is not recommended.
- Complete removal of flux is recommended.

Mounting

- Ensure that no thermo-mechanical stress occurs due to production processes (curing or overmolding processes) when thermistors are sealed, potted or overmolded or during their subsequent operation. The maximum temperature of the thermistor must not be exceeded. Ensure that the materials used (sealing/potting compound and plastic material) are chemically neutral.
- Electrodes/contacts must not be scratched or damaged before/during/after the mounting process.
- Contacts and housing used for assembly with the thermistor must be clean before mounting.
- Ensure that adjacent materials are designed for operation at temperatures comparable to the surface temperature of the thermistor. Be sure that surrounding parts and materials can withstand the temperature.
- Avoid contamination of the thermistor surface during processing.
- The connections of sensors (e.g. cable end, wire end, plug terminal) may only be exposed to an environment with normal atmospheric conditions.
- Tensile forces on cables or leads must be avoided during mounting and operation.
- Bending or twisting of cables or leads directly on the thermistor body is not permissible.
- Avoid using chemical substances as mounting aids. It must be ensured that no water or other liquids enter the NTC thermistors (e.g. through plug terminals). In particular, water based substances (e.g. soap suds) must not be used as mounting aids for sensors.
- The use of no-clean solder products is recommended. In any case mild, non-activated fluxes should be used. Flux residues after soldering should be minimized.

Operation

- Use thermistors only within the specified operating temperature range.
- Use thermistors only within the specified power range.
- Environmental conditions must not harm the thermistors. Only use the thermistors under normal atmospheric conditions or within the specified conditions.
- Contact of NTC thermistors with any liquids and solvents shall be prevented. It must be ensured that no water enters the NTC thermistors (e.g. through plug terminals). For measurement purposes (checking the specified resistance vs. temperature), the component must not be immersed in water but in suitable liquids (e.g. perfluoropolyethers such as Galden).
- Avoid dewing and condensation unless thermistor is specified for these conditions.
- Bending or twisting of cables and/or wires is not permissible during operation of the sensor in the application.
- Be sure to provide an appropriate fail-safe function to prevent secondary product damage caused by malfunction.

This listing does not claim to be complete, but merely reflects the experience of TDK.

Display of ordering codes for TDK Electronics products

The ordering code for one and the same product can be represented differently in data sheets, data books, other publications, on the company website, or in order-related documents such as shipping notes, order confirmations and product labels. The varying representations of the ordering codes are due to different processes employed and do not affect the specifications of the respective products.
Detailed information can be found on the Internet under
www.tdk-electronics.tdk.com/orderingcodes.

Symbols and terms

Symbol	English	German
A	Area	Fläche
AWG	American Wire Gauge	Amerikanische Norm für Drahtquerschnitte
B	B value	B-Wert
$B_{25/100}$	B value determined by resistance measurement at 25 °C and 100 °C	B-Wert, ermittelt durch Widerstands-messungen bei 25 °C und 100 °C
C_{th}	Heat capacitance	Wärmekapazität
I	Current	Strom
N	Number (integer)	Anzahl (ganzzahliger Wert)
P_{25}	Maximum power at 25 °C	Maximale Leistung bei 25 °C
P_{diss}	Power dissipation	Verlustleistung
P_{el}	Electrical power	Elektrische Leistung
P_{max}	Maximum power within stated temperature range	Maximale Leistung im angegebenenTemperaturbereich
$\Delta R_B/R_B$	Resistance tolerance caused by spread of B value	Widerstandstoleranz, die durch die Streuung des B-Wertes verursacht wird
R_{ins}	Insulation resistance	Isolationswiderstand
R_P	Parallel resistance	Parallelwiderstand
R_R	Rated resistance	Nennwiderstand
$\Delta R_R/R_R$	Resistance tolerance	Widerstandstoleranz
R_S	Series resistance	Serienwiderstand
R_T	Resistance at temperature T (e.g. R_{25} = resistance at 25 °C)	Widerstand bei Temperatur T (z.B. R_{25} = Widerstand bei 25 °C)
T	Temperature	Temperatur
ΔT	Temperature tolerance	Temperaturtoleranz
t	Time	Zeit
T_A	Ambient temperature	Umgebungstemperatur
T_{max}	Upper category temperature	Obere Grenztemperatur (Kategorietemperatur)
T_{min}	Lower category temperature	Untere Grenztemperatur (Kategorietemperatur)
T_{op}	Operating temperature	Betriebstemperatur
T_R	Rated temperature	Nenntemperatur
T_{surf}	Surface temperature	Oberflächentemperatur
V	Voltage	Spannung
V_{ins}	Insulation test voltage	Isolationsprüfspannung
V_{op}	Operating voltage	Betriebsspannung
V_{test}	Test voltage	Prüfspannung

SMD

Symbol	English	German
α	Temperature coefficient	Temperaturkoeffizient
Δ	Tolerance, change	Toleranz, Änderung
δ_{th}	Dissipation factor	Wärmeleitwert
τ_c	Thermal cooling time constant	Thermische Abkühlzeitkonstante
τ_a	Thermal time constant	Thermische Zeitkonstante

Abbreviations / Notes

Symbol	English	German
SMD	Surface-mounted devices	Oberflächenmontierbares Bauelement
*	To be replaced by a number in ordering codes, type designations etc.	Platzhalter für Zahl im Bestellnummern-code oder für die Typenbezeichnung.
+	To be replaced by a letter.	Platzhalter für einen Buchstaben.
	All dimensions are given in mm.	Alle Maße sind in mm angegeben.
	The commas used in numerical values denote decimal points.	Verwendete Kommas in Zahlenwerten bezeichnen Dezimalpunkte.

Important notes

The following applies to all products named in this publication:

1. Some parts of this publication contain **statements about the suitability of our products for certain areas of application**. These statements are based on our knowledge of typical requirements that are often placed on our products in the areas of application concerned. We nevertheless expressly point out **that such statements cannot be regarded as binding statements about the suitability of our products for a particular customer application**. As a rule, we are either unfamiliar with individual customer applications or less familiar with them than the customers themselves. For these reasons, it is always ultimately incumbent on the customer to check and decide whether a product with the properties described in the product specification is suitable for use in a particular customer application.
2. We also point out that **in individual cases, a malfunction of electronic components or failure before the end of their usual service life cannot be completely ruled out in the current state of the art, even if they are operated as specified**. In customer applications requiring a very high level of operational safety and especially in customer applications in which the malfunction or failure of an electronic component could endanger human life or health (e.g. in accident prevention or lifesaving systems), it must therefore be ensured by means of suitable design of the customer application or other action taken by the customer (e.g. installation of protective circuitry or redundancy) that no injury or damage is sustained by third parties in the event of malfunction or failure of an electronic component.
3. **The warnings, cautions and product-specific notes must be observed.**
4. In order to satisfy certain technical requirements, **some of the products described in this publication may contain substances subject to restrictions in certain jurisdictions (e.g. because they are classed as hazardous)**. Useful information on this will be found in our Material Data Sheets on the Internet (www.tdk-electronics.tdk.com/material). Should you have any more detailed questions, please contact our sales offices.
5. We constantly strive to improve our products. Consequently, **the products described in this publication may change from time to time**. The same is true of the corresponding product specifications. Please check therefore to what extent product descriptions and specifications contained in this publication are still applicable before or when you place an order. We also **reserve the right to discontinue production and delivery of products**. Consequently, we cannot guarantee that all products named in this publication will always be available. The aforementioned does not apply in the case of individual agreements deviating from the foregoing for customer-specific products.
6. Unless otherwise agreed in individual contracts, **all orders are subject to our General Terms and Conditions of Supply**.

Important notes

7. **Our manufacturing sites serving the automotive business apply the IATF 16949 standard.** The IATF certifications confirm our compliance with requirements regarding the quality management system in the automotive industry. Referring to customer requirements and customer specific requirements ("CSR") TDK always has and will continue to have the policy of respecting individual agreements. Even if IATF 16949 may appear to support the acceptance of unilateral requirements, we hereby like to emphasize that **only requirements mutually agreed upon can and will be implemented in our Quality Management System.** For clarification purposes we like to point out that obligations from IATF 16949 shall only become legally binding if individually agreed upon.
8. The trade names EPCOS, CeraCharge, CeraDiode, CeraLink, CeraPad, CeraPlas, CSMP, CTVS, DeltaCap, DigiSiMic, ExoCore, FilterCap, FormFit, LeaXield, MiniBlue, MiniCell, MKD, MKK, MotorCap, PCC, PhaseCap, PhaseCube, PhaseMod, PhiCap, PowerHap, PQSine, PQvar, SIFERRIT, SIFI, SIKOREL, SilverCap, SIMDAD, SiMic, SIMID, SineFormer, SIOV, ThermoFuse, WindCap are **trademarks registered or pending** in Europe and in other countries. Further information will be found on the Internet at www.tdk-electronics.tdk.com/trademarks.

Release 2018-10

Mouser Electronics

Authorized Distributor

Click to View Pricing, Inventory, Delivery & Lifecycle Information:

EPCOS / TDK:

B57321V2102H060 B57321V2222H060 B57301V2472H060 B57321V2103H060 B57321V2473H060 B57301V2472J060 B57321V2103J060 B57321V2223J060 B57371V2104J060 B57371V2474J060 B57321V2223H060 B57371V2103H060 B57371V2103J060 B57371V2104H060 B57371V2223H060 B57371V2223J060 B57371V2473H060 B57371V2473J060 B57371V2474H060 B57371V2682H060 B57371V2682J060 B57371V2683H060 B57371V2683J060 B57321V2102J060 B57321V2473J060 B57330V2103J260 B57330V2103F260 B57321V2222J060 B57374V2104F060 B57330V2103H260 B57301V2103J060 B57374V2104H060 B57301V2103H060 B57358V2473J560 B57357V2473F560 B57350V2104F460 B57374V2104J060 B57357V2473J560 B57358V2473H560 B57357V2473H560 B57358V2104H360 B57350V2104H460 B57350V2104J460 B57358V2104J360

Компания «ЭлектроПласт» предлагает заключение долгосрочных отношений при поставках импортных электронных компонентов на взаимовыгодных условиях!

Наши преимущества:

- Оперативные поставки широкого спектра электронных компонентов отечественного и импортного производства напрямую от производителей и с крупнейших мировых складов;
- Поставка более 17-ти миллионов наименований электронных компонентов;
- Поставка сложных, дефицитных, либо снятых с производства позиций;
- Оперативные сроки поставки под заказ (от 5 рабочих дней);
- Экспресс доставка в любую точку России;
- Техническая поддержка проекта, помощь в подборе аналогов, поставка прототипов;
- Система менеджмента качества сертифицирована по Международному стандарту ISO 9001;
- Лицензия ФСБ на осуществление работ с использованием сведений, составляющих государственную тайну;
- Поставка специализированных компонентов (Xilinx, Altera, Analog Devices, Intersil, Interpoint, Microsemi, Aeroflex, Peregrine, Syfer, Eurofarad, Texas Instrument, Miteq, Cobham, E2V, MA-COM, Hittite, Mini-Circuits,General Dynamics и др.);

Помимо этого, одним из направлений компании «ЭлектроПласт» является направление «Источники питания». Мы предлагаем Вам помощь Конструкторского отдела:

- Подбор оптимального решения, техническое обоснование при выборе компонента;
- Подбор аналогов;
- Консультации по применению компонента;
- Поставка образцов и прототипов;
- Техническая поддержка проекта;
- Защита от снятия компонента с производства.

Как с нами связаться

Телефон: 8 (812) 309 58 32 (многоканальный)
Факс: 8 (812) 320-02-42
Электронная почта: org@eplast1.ru
Адрес: 198099, г. Санкт-Петербург, ул. Калинина, дом 2, корпус 4, литера А.