System Motor Driver Series for CD･DVD･BD Player

6ch System Motor Driver For Car AV

BD8255MUV-M

General Description

BD8255MUV-M is a 6ch motor driver developed for driving coil actuator (2ch), sled motor (2ch), a loading motor, and a three-phase motor for spindle. This can drive the motor and coil of CD/DVD drive.
It has a built-in Serial Peripheral Interface (SPI) with a max clock frequency of 35MHz, for interfacing with the Micro-controller.

Key Specifications

- Ron(Spindle): 1.0Ω(Typ)
- Ron(Loading): 1.0Ω(Typ)

Package

	W(Typ) × D(Typ) × H(Max)
VQFN48SV7070	7.00mm × 7.00mm × 1.00mm

Features

- Built-in Serial Peripheral Interface(SPI)
- High efficiency at 180° PWM for spindle driver
- Built-in 2-channel stepping motor driver for sled
- Built-in loading driver short-circuit protection

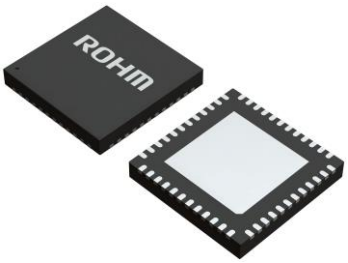

VQFN48SV7070

Applications

- Car navigation
- Car AV

Typical Application Circuit

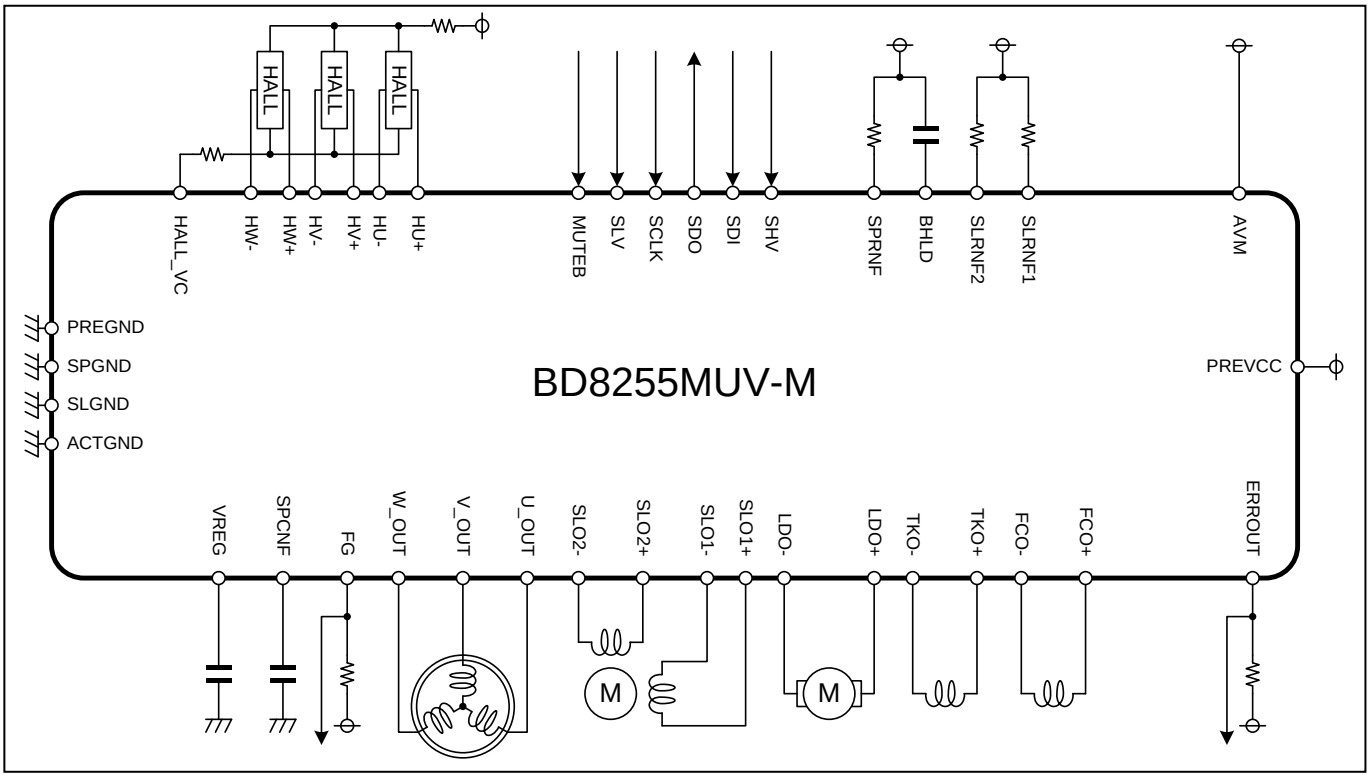

Figure 1. Typical Application Circuit

○Product structure：Silicon monolithic integrated circuit ○This product is not designed protection against radioactive rays

© 2013 ROHM Co., Ltd. All rights reserved.

Pin Configuration (TOP VIEW)

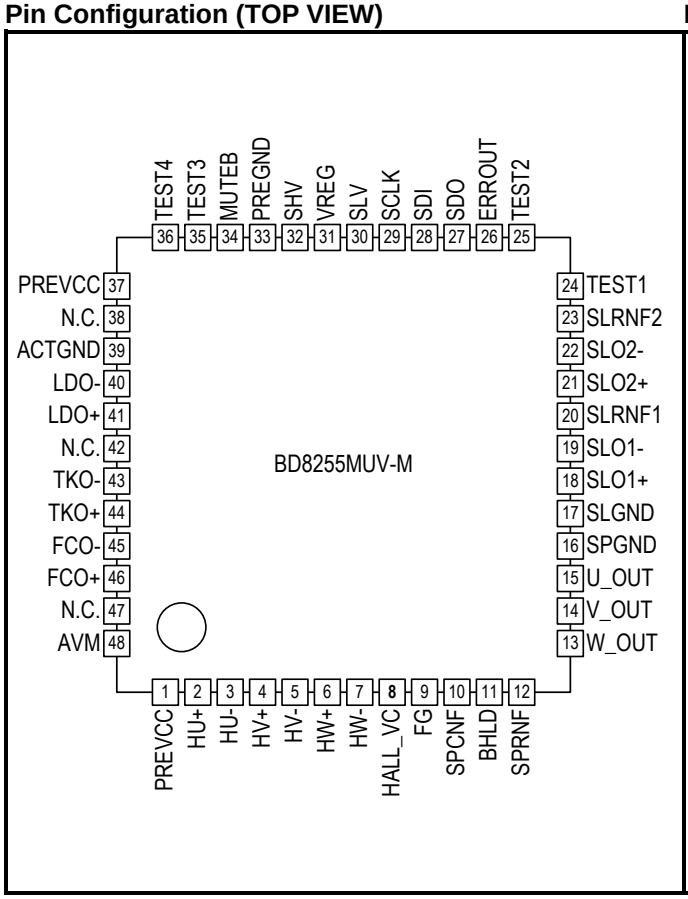

Figure 2. Pin configuration

Block Diagram

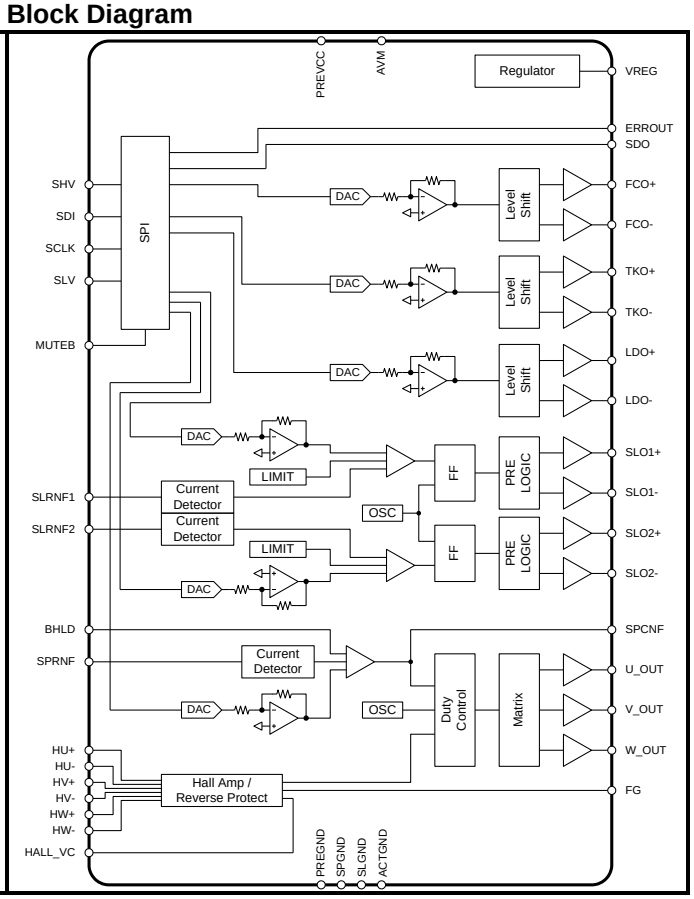

Figure 3. Block diagram

Pin Description

No.	Pin Name	Function	No.	Pin Name	Function
1	PREVCC	Pre driver power supply(Note 1)	25	TEST2	TEST Pin (use with GND short)
2	HU+	Hall amp. U positive input	26	ERROUT	Serial data error output
3	HU-	Hall amp. U negative input	27	SDO	Serial data output
4	HV+	Hall amp. V positive input	28	SDI	Serial data input
5	HV-	Hall amp. V negative input	29	SCLK	Serial clock input
6	HW+	Hall amp. W positive input	30	SLV	Serial slave input
7	HW-	Hall amp. W negative input	31	VREG	Inside power supply for SPI logic
8	HALL_VC	Hall bias	32	SHV	Power supply for SDO output
9	FG	FG output	33	PREGND	Pre block ground
10	SPCNF	Spindle driver loop filter	34	MUTEB	Mute input
11	BHLD	Spindle current bottom hold	35	TEST3	TEST Pin (use open)
12	SPRNF	Spindle power supply and current sense	36	TEST4	TEST Pin (use open)
13	W_OUT	Spindle driver W output	37	PREVCC	Pre driver power supply(Note 1)
14	V_OUT	Spindle driver V output	38	N.C.	-
15	U_OUT	Spindle driver U output	39	ACTGND	Actuator and loading power ground
16	SPGND	Spindle power ground	40	LDO-	Loading driver negative output
17	SLGND	Sled power ground	41	LDO+	Loading driver positive output
18	SLO1+	Sled driver 1 positive output	42	N.C.	-
19	SLO1-	Sled driver 1 negative output	43	TKO-	Tracking driver negative output
20	SLRNF1	Sled 1 power supply and current sense	44	TKO+	Tracking driver positive output
21	SLO2+	Sled driver 2 positive output	45	FCO-	Focus driver negative output
22	SLO2-	Sled driver 2 negative output	46	FCO+	Focus driver positive output
23	SLRNF2	Sled 2 power supply and current sense	47	N.C.	-
24	TEST1	TEST Pin (use with GND short)	48	AVM	Actuator power supply

(Note1) Use with Pin1 and Pin37 are shorted.

© 2013 ROHM Co., Ltd. All rights reserved.

Absolute Maximum Ratings (Ta = 25°C)

Parameter	Symbol	Rating	Unit
Power MOS power supply voltage	V_{SPRNF},V_{SLRNF1},V_{SLRNF2}	7	V
Predriver / BTL power supply voltage	V_{PREVCC},V_{AVM}	7	V
Serial Output power supply	V_{SHV}	7	V
Input pin voltage 1	V_{IN1} (Note 1)	7	V
Output pin voltage 1	V_{OUT1} (Note 2)	7	V
Power Consumption	Pd	1.15 (Note 3)	W
Operating temperature range	Topr	-40 to +90	°C
Storage temperature range	Tstg	-55 to +150	°C
Junction temperature	Tjmax	150	°C

(Note 1) BHLD, SPCNF, HU+, HU-, HV+, HV-, HW+, HW-, HALL_VC, SLV, SCLK, SDI, MUTEB
(Note 2) FG, U_OUT, V_OUT, W_OUT, SLO1+, SLO1-, SLO2+, SLO2-, ERROUT, LDO+, LDO-, SDO, VREG, FCO+, FCO-, TKO+, TKO-
(Note 3) Ta=25°C, PCB (74.2mm×74.2mm×1.6mm, glass epoxy substrate 1-layer platform, board copper foil area 34.09mm^2) mounting.
Derated by 9.3mW/°C when operating above 25°C

Caution: Operating the IC over the absolute maximum ratings may damage the IC. In addition, it is impossible to predict all destructive situations such as short-circuit modes, open circuit modes, etc. Therefore, it is important to consider circuit protection measures, like adding a fuse, in case the IC is operated in a special mode exceeding the absolute maximum ratings.

Recommended Operating Conditions (Ta = -40°C to +90°C)

Parameter	Symbol	Limits			Unit
		Min.	Typ	Max.	
Spindle driver power supply voltage (Note 1)(Note 2)	V_{SPRNF}	-	V_{PREVCC}	-	V
Sled motor driver power supply voltage (Note 1)(Note 2)	V_{SLRNF1}, V_{SLRNF2}	-	V_{PREVCC}	-	V
Predriver power supply voltage (Note 1)	V_{PREVCC}	4.5	5	5.5	V
Actuator driver power supply voltage (Note 2)	V_{AVM}	4.5	5	V_{PREVCC}	V
Serial output power supply (Note 2)	V_{SHV}	3.0	3.3	3.6	V

(Note 1) Consider power consumption when deciding power supply voltage.
(Note 2) Set the voltage same as V_{PREVCC}.

© 2013 ROHM Co., Ltd. All rights reserved.

Electrical Characteristics (Unless otherwise specified, Ta=25°C, V_{PRECC}=V_{SPRNF}=V_{SLRNF1}=V_{SLRNF2}=V_{AVM}=5V, V_{SHV}=3.3V, R_{SPRNF}=0.33Ω, R_{SLRNF}=0.56Ω)

Parameter	Symbol	Limits			Unit	Conditions
		Min.	Typ	Max.		
Circuit Current						
PREVCC Quiescent Current	I_{Q1}	-	19	32	mA	MUTEB=H SPI=72h FE, 70h FE
PREVCC Standby Current	I_{ST1}	-	3	6	mA	MUTEB=L
Spindle Driver						
Hall Bias Voltage	V_{HB}	0.45	0.9	1.35	V	IHB=10mA
Input Bias Current	I_{HIB}	-	0.5	3	μA	
Input Level	V_{HIM}	50	-	-	mVpp	
Common Mode Input Range	V_{HICM}	1.5	-	3.8	V	
Input Dead Zone (One Side)	V_{DZSP}	0	10	40	mV	
Input-Output Gain	gm_{SP}	0.98	1.24	1.50	A/V	R_{SPRNF}=0.33Ω, R_L=2Ω
Output ON Resistance (Total Sum)	R_{ONSP}	-	1.0	1.8	Ω	IL=500mA
Output limit Current	I_{LIMSP}	0.85	1.06	1.27	A	R_{SPRNF}=0.33Ω
PWM Frequency	f_{OSC}	-	100	-	kHz	R_L=2Ω
FG Output Low Level Voltage	V_{FGL}	-	0.1	0.3	V	33KΩ pull-up(3.3V)
Sled Motor Driver						
Input Dead Zone (One Side)	V_{DZSL}	5	15	30	mV	
Input-Output Gain	gm_{SL}	0.84	1.10	1.36	A/V	$R_{SLRNF1,2}$=0.56Ω, R_L=8Ω
Output ON Resistance (Total sum)	R_{ONSL}	-	1.8	2.5	Ω	IL=500mA
Output Limit Current	I_{LIMSL}	0.79	0.93	1.07	A	$R_{SLRNF1,2}$=0.56Ω
PWM Frequency	f_{OSC}	-	100	-	kHz	R_L=8Ω
Actuator Driver						
Output Offset Voltage	V_{OFACT}	-50	0	50	mV	Low Gain mode, R_L=8Ω
Output ON Resistance	R_{ONACT}	-	1.5	2.0	Ω	IL=500mA
Voltage Gain 1	G_{VACT1}	10.5	11.7	12.9	dB	Low Gain mode, R_L=8Ω
Voltage Gain 2	G_{VACT2}	16.4	17.7	18.9	dB	High Gain mode, R_L=8Ω
Loading Driver						
Output Offset Voltage	V_{OFLD}	-100	0	100	mV	Low Gain mode, R_L=8Ω
Output ON Resistance	R_{ONLD}	-	1.0	1.5	Ω	IL=500mA
Voltage Gain 1	G_{VLD1}	15.2	17.2	19.2	dB	Low Gain mode, R_L=8Ω
Voltage Gain 2	G_{VLD2}	16.7	18.7	20.7	dB	High Gain mode, R_L=8Ω
Protect Sign Output						
ERROUT Low Level Output Voltage	V_{OL2}	-	0.1	0.3	V	33kΩ pull-up(3.3V)
Logic Inputs (SDI,SCLK,SLV,MUTEB)						
Low Level Input Voltage	V_{INL}	-	-	0.5	V	
High Level Voltage	V_{INH}	2.2	-	-	V	
High Level Current (SDI,SCLK,MUTEB)	I_{INH}	-	33	66	μA	SDI,SCLK,MUTEB=3.3V
Low Level Current (SLV)	I_{INL}	-60	-30	-	μA	SLV=0V
Logic Output (SDO)						
Low Level Output Voltage	V_{OUTL}	-	-	0.3	V	
High Level Output Voltage	V_{OUTH}	V_{SHV}-0.3	-	-	V	
Function						
PREVCC Drop Mute Voltage	V_{MVCC}	3.4	3.8	4.0	V	
TSD						
TSD Junction Temperature(Note 1)	T_{TSD}	150	175	200	°C	
TSD Hysteresis Temperature(Note 1)	T_{HYS}	-	25	-	°C	

(Note 1) These items are specified by design, not tested during production

© 2013 ROHM Co., Ltd. All rights reserved.

Electrical Characteristics (Unless otherwise specified, Ta=-40℃ to 90°C, V_{PRECC}=V_{SPRNF}=V_{SLRNF1}=V_{SLRNF2}=V_{AVM}=5V, V_{SHV}=3.3V, R_{SPRNF}=0.33Ω, R_{SLRNF}=0.56Ω)

Parameter	Symbol	Limits			Unit	Conditions
		Min.	Typ	Max.		
Circuit Current						
PREVCC Quiescent Current	I_{Q1}	-	19	39	mA	MUTEB=H SPI=72h FE, 70h FE
PREVCC Standby Current	I_{ST1}	-	3	6	mA	MUTEB=L
Spindle Driver						
Hall Bias Voltage	V_{HB}	0.45	0.9	1.35	V	IHB=10mA
Input Bias Current	I_{HIB}	-	0.5	3	μA	
Input Level	V_{HIM}	50	-	-	mVpp	
Common Mode Input Range	V_{HICM}	1.5	-	3.8	V	
Input Dead Zone (One Side)	V_{DZSP}	0	10	45	mV	
Input-Output Gain	gm_{SP}	0.85	1.24	1.63	A/V	R_{SPRNF}=0.33Ω, R_L=2Ω
Output ON Resistance (Total Sum)	R_{ONSP}	-	1.0	1.8	Ω	IL=500mA
Output limit Current	I_{LIMSP}	0.85	1.06	1.27	A	R_{SPRNF}=0.33Ω
PWM Frequency	f_{OSC}	-	100	-	kHz	R_L=2Ω
FG Output Low Level Voltage	V_{FGL}	-	0.1	0.3	V	33KΩ pull-up(3.3V)
Sled Motor Driver						
Input Dead Zone (One Side)	V_{DZSL}	5	15	35	mV	
Input-Output Gain	gm_{SL}	0.84	1.10	1.36	A/V	$R_{SLRNF1,2}$=0.56Ω, R_L=8Ω
Output ON Resistance (Total sum)	R_{ONSL}	-	1.8	2.5	Ω	IL=500mA
Output Limit Current	I_{LIMSL}	0.79	0.93	1.07	A	$R_{SLRNF1,2}$=0.56Ω
PWM Frequency	f_{OSC}	-	100	-	kHz	R_L=8Ω
Actuator Driver						
Output Offset Voltage	V_{OFACT}	-50	0	50	mV	Low Gain mode, R_L=8Ω
Output ON Resistance	R_{ONACT}	-	1.5	2.0	Ω	IL=500mA
Voltage Gain 1	G_{VACT1}	9.4	11.7	13.5	dB	Low Gain mode, R_L=8Ω
Voltage Gain 2	G_{VACT2}	15.4	17.7	19.5	dB	High Gain mode, R_L=8Ω
Loading Driver						
Output Offset Voltage	V_{OFLD}	-110	0	110	mV	Low Gain mode, R_L=8Ω
Output ON Resistance	R_{ONLD}	-	1.0	1.5	Ω	IL=500mA
Voltage Gain 1	G_{VLD1}	14.1	17.2	19.5	dB	Low Gain mode, R_L=8Ω
Voltage Gain 2	G_{VLD2}	15.6	18.7	21.0	dB	High Gain mode, R_L=8Ω
Protect Sign Output						
ERROUT Low Level Output Voltage	V_{OL2}	-	0.1	0.3	V	33kΩ pull-up(3.3V)
Logic Inputs (SDI,SCLK,SLV,MUTEB)						
Low Level Input Voltage	V_{INL}	-	-	0.5	V	
High Level Voltage	V_{INH}	2.2	-	-	V	
High Level Current (SDI,SCLK,MUTEB)	I_{INH}	-	33	75	μA	SDI,SCLK,MUTEB=3.3V
Low Level Current (SLV)	I_{INL}	-75	-30	-	μA	SLV=0V
Logic Output (SDO)						
Low Level Output Voltage	V_{OUTL}	-	-	0.3	V	
High Level Output Voltage	V_{OUTH}	V_{SHV}-0.3	-	-	V	
Function						
PREVCC Drop Mute Voltage	V_{MVCC}	3.4	3.8	4.1	V	

© 2013 ROHM Co., Ltd. All rights reserved.

Typical Performance Curves

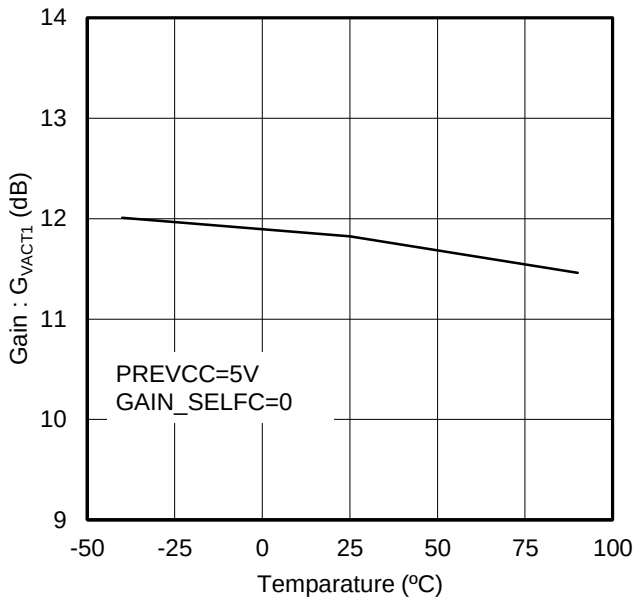

FC Voltage gain 1 (Low gain mode)

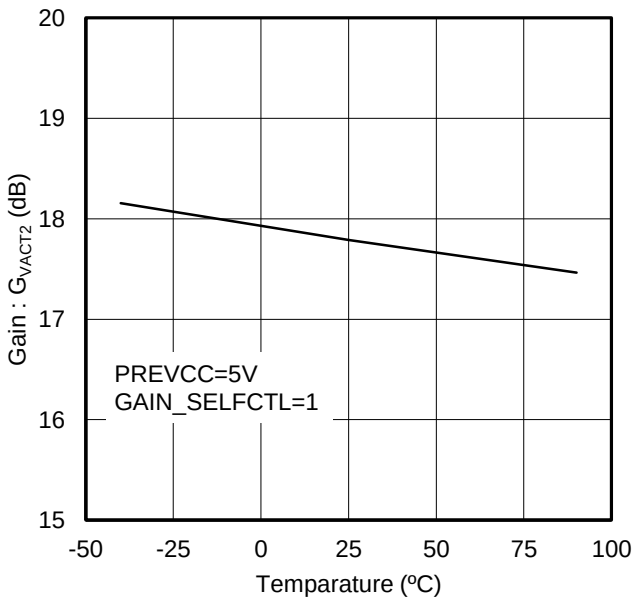

FC Voltage gain 2 (High gain mode)

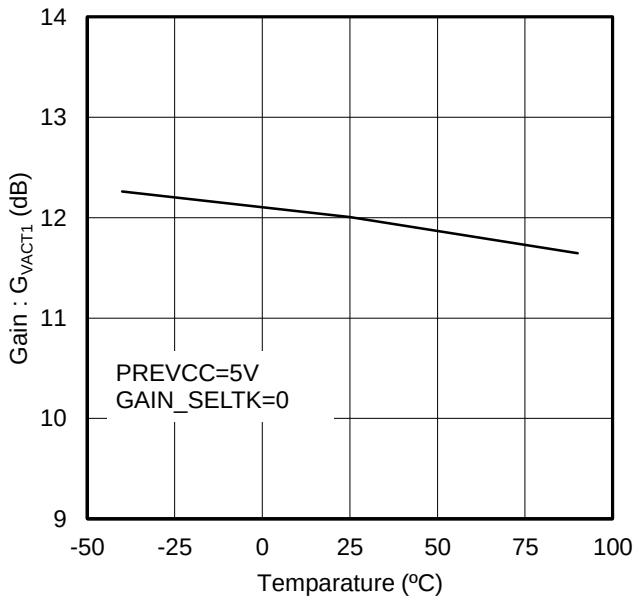

TK Voltage gain 1 (Low gain mode)

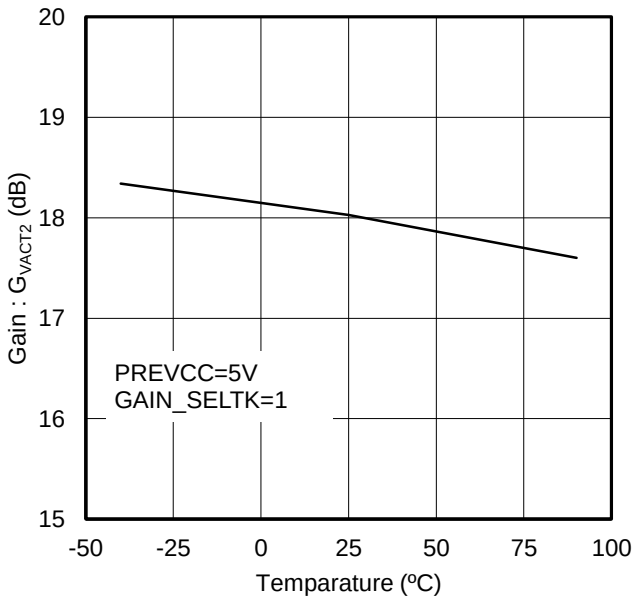

TK Voltage gain 2 (High gain mode)

© 2013 ROHM Co., Ltd. All rights reserved.

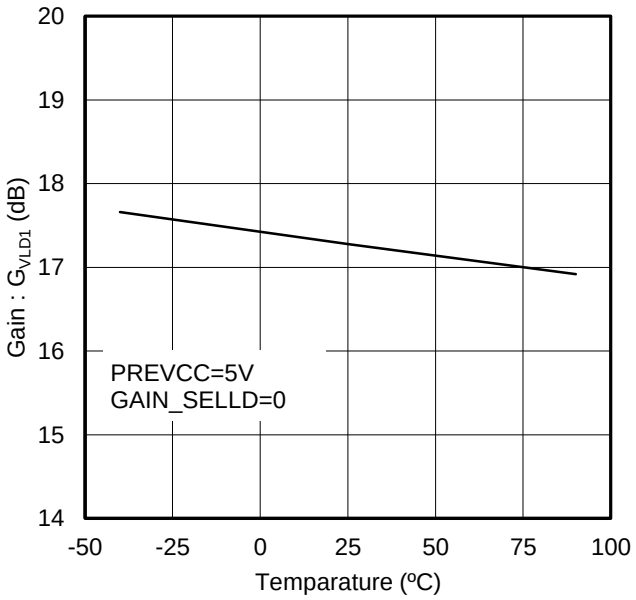

LD Voltage gain 1 (Low gain mode)

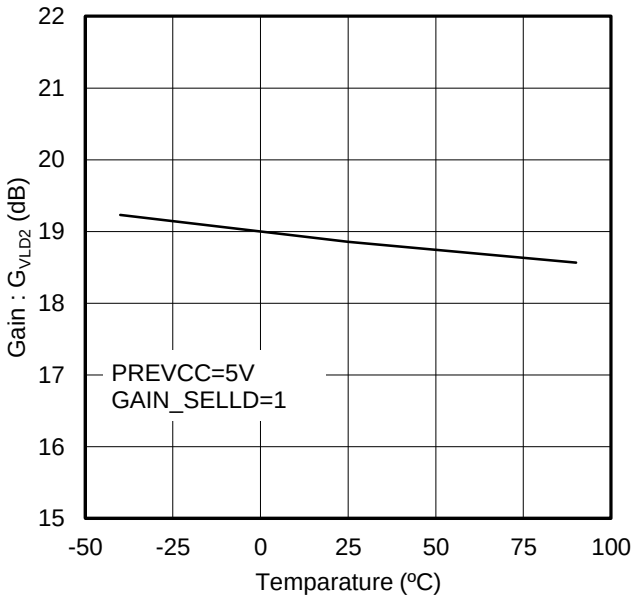

LD Voltage gain 2 (High gain mode)

© 2013 ROHM Co., Ltd. All rights reserved.

Description of Blocks

■ Serial Peripheral Interface (SPI)

16 bit serial interfaces (SLV, SCLK, SDI, SDO) are provided to perform setting of operations and output levels. SPI communication is performed while SLV terminal is in Low. SDI data are sent to internal shift register at the rising edge of SCLK terminal. Shift register data are loaded into 12 bit internal shift register at the rising edge of SLV terminal according to the address map. Readout operation is performed when readout bit is set to 1. Then state is read out at the falling edge of SCLK terminal and output to SDO terminal.

◆ Input-Output Timing

Figure 4 shows write/read timing of the serial ports.
Minimum timing of each item is as shown in the table below. In order to prevent increase in delay of SPI input/output timing, wiring between SLV/SCLK/SDI/SDO and the microcomputer should be as short as possible to minimize the wiring capacitance.

Symbol	Item	Min	Typ	Max	Unit
A	SDI setup time *	9	-	-	ns
B	SDI hold time *	9	-	-	ns
C	Setup SLV to SCLK rising edge *	9	-	-	ns
D	SCLK high pulse width *	10	-	-	ns
E	SCLK low pulse width *	10	-	-	ns
F	Setup SCLK rising edge to SLV *	9	-	-	ns
G	SLV pulse width *	15	-	-	ns
H	SDO delay time *	-	-	10	ns
I	SDO hold time *	2	-	-	ns
J	SDO OFF time *	-	-	20	ns
K	SCLK frequency	-	-	35	MHz

* Guaranteed Design Items

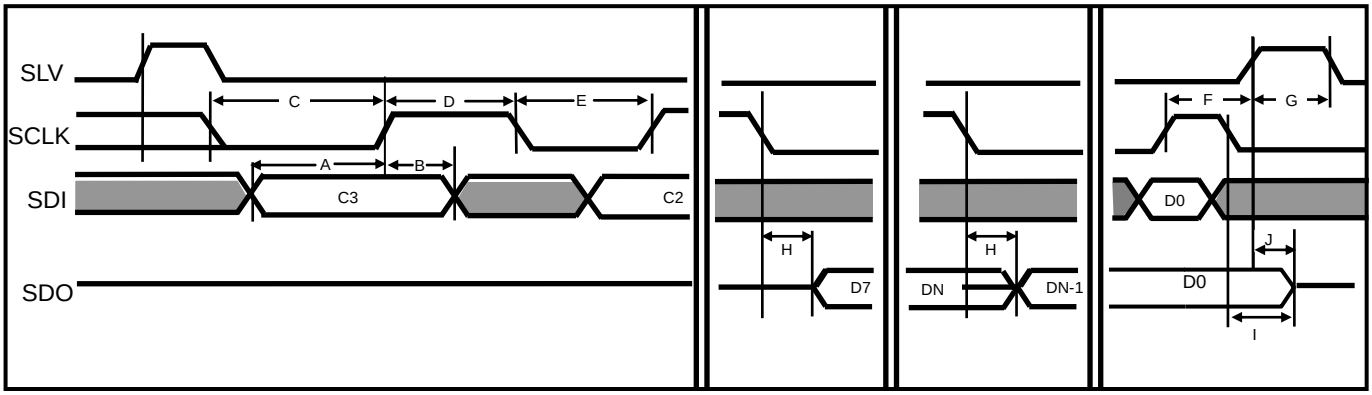

Figure 4. SPI Input / Output Timing

© 2013 ROHM Co., Ltd. All rights reserved.

◆ DAC Register

1. Input / Output Sequence
Enter the register address in the SDI input on the first 4 bits and data for a specific DAC voltage in the next 12 bits.
When specified as REG=02h (address for focus), REG 77h data is output to the SDO.
When specified as REG≠02h (address for non-focus), SDO becomes Hi-Z.

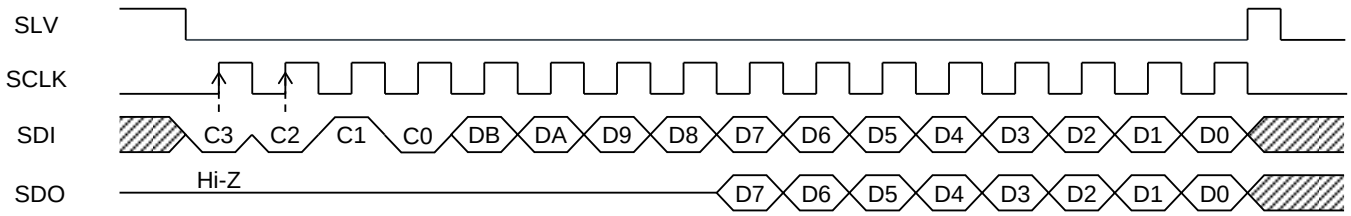

Figure 5. 12bit Write / 8bit Read Sequence (when specified as REG=02h)

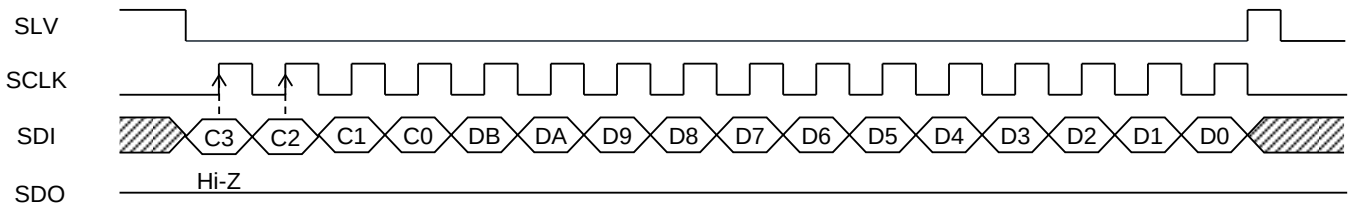

Figure 6. 12bit Write Sequence (when specified as REG≠02h, C3, C2≠1, 1)

2. Address Map (hereinafter register address is referred to as REG)

DAC Register Address Map

REG	NAME	R/W	DB	DA	D9	D8	D7	D6	D5	D4	D3	D2	D1	D0	Reset **
00h	N/A	-	-	-	-	-	-	-	-	-	-	-	-	-	-
01h	N/A	-	-	-	-	-	-	-	-	-	-	-	-	-	-
02h	DFC	W	11	10	9	8	7	6	5	4	3	2	1	0	B
03h	DTK	W	11	10	9	8	7	6	5	4	3	2	1	0	B
04h	DSL1	W	11	10	9	8	7	6	5	4	3	2	1 *	0 *	B
05h	DSL2	W	11	10	9	8	7	6	5	4	3	2	1 *	0 *	B
06h	N/A	-	-	-	-	-	-	-	-	-	-	-	-	-	-
07h	N/A	-	-	-	-	-	-	-	-	-	-	-	-	-	-
08h	DSP	W	11	10	9	8	7	6	5	4	3	2	1	0	B
09h	DLD	W	11	10	9	8	7	6	5	4	3	2	1	0	B
0Ah	N/A	-	-	-	-	-	-	-	-	-	-	-	-	-	-
0Bh	N/A	-	-	-	-	-	-	-	-	-	-	-	-	-	-

Default : 0
* : fixed at 0
** : refer to P.15 about reset
- : not affected even when data is written

© 2013 ROHM Co., Ltd. All rights reserved.

◆ Control register

1. Input / Output Sequence

When writing data to the control register, enter the register address in the first 7 bits of the SDI input, then set the 1bit R/W to 0 and enter the data of each setting in the last 8 bits. SDO is Hi-Z when R/W=0.
When reading data from the control register, enter the register address in the first 7 bits of the SDI input, then set the 1 bit R/W to 1. The last 8 bits are ignored. When R/W=1, 8-bit data of specified address is output to the SDO.

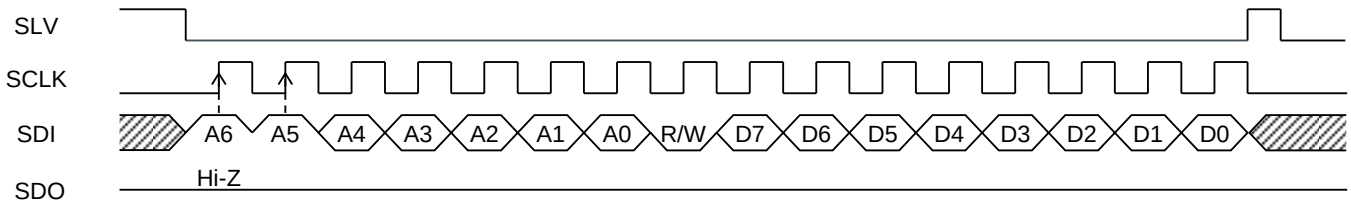

Figure 7. Control Register 8 bit Write Sequence (A6, A5=1,1, R/W= 0)

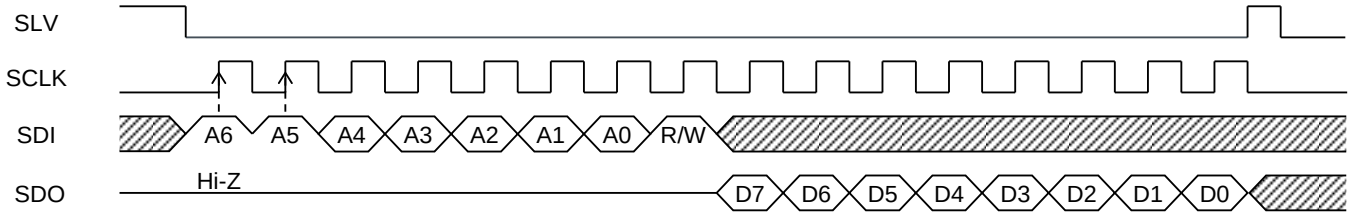

Figure 8. Control Register 8 bit Read Sequence (A6, A5=1,1, R/W= 1)

2. Address Map

Control Register Address Map

REG	NAME	R/W	D7	D6	D5	D4	D3	D2	D1	D0
70h	OUTPUT _EN1	R/W	N/A	FC _OUTEN	TK _OUTEN	SL _OUTEN	N/A	SP _OUTEN	LD _OUTEN	N/A
71h	-	-	-	-	-	-	-	-	-	-
72h	POWER _SAVE1	R/W	N/A	FC _PSB	TK _PSB	SL _PSB	N/A	SP _PSB	LD _PSB	N/A
73h	-	-	-	-	-	-	-	-	-	-
74h	DRIVER _SET	R/W	N/A	SP _BRAKE	GAIN _SELFC	GAIN _SELTK	N/A	LD _BRAKE	GAIN _SELLD	N/A
75h	RESET	W	RST _DAC	RST _CTLREG	RST _PKTERR	RST _PKTSTOP	N/A	RST _SHORT	N/A	N/A
76h	PKT _TIME	R/W	N/A	N/A	PKTSTOP _TIME1	PKTSTOP _TIME0	N/A	N/A	N/A	N/A
77h	STATUS _FLAG1	R	ALL _ERR	N/A	N/A	SHORT _LD	TSD	PKT _ERR	PKT _STOP	UVLO _PREVCC
78h	TEST0	R/W	Reserved	Reserved	Reserved	Reserved	Reserved	Reserved	Reserved	Reserved
79h	TEST1	R/W	Reserved	Reserved	Reserved	Reserved	Reserved	N/A	N/A	N/A
7Ah	TEST2	R/W	N/A	N/A	Reserved	N/A	Reserved	Reserved	Reserved	N/A
7Bh	RST _CHECK	R/W	RST _CHECKA	RST _CHECKB	N/A	N/A	N/A	N/A	N/A	N/A
7Ch	-	-	-	-	-	-	-	-	-	-
7Dh	-	-	-	-	-	-	-	-	-	-
7Eh	-	-	-	-	-	-	-	-	-	-
7Fh	-	-	-	-	-	-	-	-	-	-

Write access to "Reserved" bits should be made by "0" input.

Read access to "N/A" bits will return "0".

© 2013 ROHM Co., Ltd. All rights reserved.

3. Details of Control Registers
Functions of each register are as shown below.

・ REG 70h OUTPUT_EN1 (Read / Write)
Each driver output settings (Hi-Z/Active) can be changed in REG 70h.

Bit	Name	Default	Function	Set "0"	Set "1"	Reset
7	N/A	0	-	-	-	-
6	FC_OUTEN	0	FC Output Enable	Disable	Enable	A
5	TK_OUTEN	0	TK Output Enable	Disable	Enable	A
4	SL_OUTEN	0	SL1,SL2 Output Enable	Disable	Enable	A
3	N/A	0	-	-	-	-
2	SP_OUTEN	0	SP Output Enable	Disable	Enable	A
1	LD_OUTEN	0	LD Output Enable	Disable	Enable	A
0	N/A	0	-	-	-	-

・ REG 71h -

Bit	Name	Default	Function	Set "0"	Set "1"	Reset
7	-	-	-	-	-	-
6	-	-	-	-	-	-
5	-	-	-	-	-	-
4	-	-	-	-	-	-
3	-	-	-	-	-	-
2	-	-	-	-	-	-
1	-	-	-	-	-	-
0	-	-	-	-	-	-

・ REG 72h POWER_SAVE1 (Read / Write)
Power save mode settings for each block can be set in REG 72h.
Power save mode makes the output Hi-Z and turns OFF the internal circuit to reduce the current consumption.

Bit	Name	Default	Function	Set "0"	Set "1"	Reset
7	N/A	0	-	-	-	-
6	FC_PSB	0	FC Block Power Save	Enable	Disable	A
5	TK_PSB	0	TK Block Power Save	Enable	Disable	A
4	SL_PSB	0	SL1,SL2 Block Power Save	Enable	Disable	A
3	N/A	0	-	-	-	-
2	SP_PSB	0	SP Block Power Save	Enable	Disable	A
1	LD_PSB	0	LD Block Power Save	Enable	Disable	A
0	N/A	0	-	-	-	-

© 2013 ROHM Co., Ltd. All rights reserved.

・ REG 73h -

Bit	Name	Default	Function	Set "0"	Set "1"	Reset
7	-	-	-	-	-	-
6	-	-	-	-	-	-
5	-	-	-	-	-	-
4	-	-	-	-	-	-
3	-	-	-	-	-	-
2	-	-	-	-	-	-
1	-	-	-	-	-	-
0	-	-	-	-	-	-

・ REG 74h DRIVER_SET (Read / Write)
Operation mode settings of the driver can be changed in REG 74h.

Bit	Name	Default	Function	Set "0"	Set "1"	Reset
7	N/A	0	-	-	-	-
6	SP_BRAKE	0	SP Brake Mode	Short Brake	Reverse Brake	A
5	GAIN_SELFC	0	Gain Select FC	Low Gain	High Gain	A
4	GAIN_SELTK	0	Gain Select TK	Low Gain	High Gain	A
3	N/A	0	-	-	-	-
2	LD_BRAKE	0	LD Brake Mode	LD Output Active	LD Output Short Brake	A
1	GAIN_SELLD	0	Gain Select LD	Low Gain	High Gain	A
0	N/A	0	-	-	-	-

<Bit 6> Short brake/reverse brake can be selected as spindle brake mode.
<Bit 5> Low/high gain mode of the focus driver's gain can be selected.
<Bit 4> Low/high gain mode of the tracking driver's gain can be selected.
<Bit 2> Short brake mode (both positive & negative output low) can be activated when loading output is "Active".
<Bit 1> Low/high gain mode of the loading driver's gain can be switched.

・ REG 75h RESET (Write)
Resister settings and latched error flag can be reset in REG 75h.

Bit	Name	Default	Function	Set "0"	Set "1"	Reset
7	RST_DAC	0	DAC Reset	Normal	Reset	E
6	RST_CTLREG	0	Control Register Reset	Normal	Reset	E
5	RST_PKTERR	0	Packet Bit Counts Error Reset	Normal	Reset	E
4	RST_PKTSTOP	0	No Packet Input Error Reset	Normal	Reset	E
3	N/A	0	-	-	-	-
2	RST_SHORT	0	LD Supply/Ground-Fault Protection Latch Off Reset	Normal	Reset	E
1	N/A	0	-	-	-	-
0	N/A	0	-	-	-	-

<Bit 7>Reset all DAC register value to 0.
<Bit 6>Reset all control register value to default.
<Bit 5>Reset packet bit counts error flag register value to 0.
<Bit 4>Reset no packet input error flag register value to 0.
<Bit 2>Reset loading supply/ground-fault protection flag register value to 0.

© 2013 ROHM Co., Ltd. All rights reserved.

・ REG 76h PKT_TIME (Read / Write)
In REG 76h, you can specify or disable wait time until error operation in case of no SPI input.

Bit	Name	Default	Function	Set "0"	Set "1"	Reset
7	N/A	0	-	-	-	-
6	N/A	0	-	-	-	-
5	PKTSTOP_TIME1	0	SPI Packet Watchdog Timer Operation Time Selection	(00)=Disabled, (01)=1ms, (10)=100μs, (11)=30μs		A
4	PKTSTOP_TIME0	0				A
3	N/A	0	-	-	-	-
2	N/A	0	-	-	-	-
1	N/A	0	-	-	-	-
0	N/A	0	-	-	-	-

・ REG 77h STATUS_FLAG (Read)
REG 77h outputs each protection state flag

Bit	Name	Default	Function	Set "0"	Set "1"	Reset
7	ALL_ERR	0	All Error Flags	Normal	Abnormal	*
6	N/A	0	-	-	-	-
5	N/A	0	-	-	-	-
4	SHORT_LD	0	LD Supply/Ground-Fault Protection Detection Flag (LD Output Hi-Z)	Normal	Abnormal	C
3	TSD	0	TSD Detection Flag (All Output Hi-Z)	Normal	Abnormal	F
2	PKT_ERR	0	Number of Packet Bits Error Flag (Flag Only)	Normal	Abnormal	C
1	PKT_STOP	0	Packet Watchdog Timer (All Output Hi-Z)	Normal	Abnormal	C
0	UVLO_PREVCC	0	VCC Low Voltage Fault Flag (All Output Hi-Z)	Normal	Abnormal	D

<Bit7> *How to reset: ALL_ERR outputs all the error flags (OCP_FCTL, OCP_TK, SHORT_LD, TSD, PKT_ERR, PKT_STOP, UVLO_VCC). Therefore, reset conditions are depending on each flags.

・ REG 78h TEST0 (Read / Write)

Bit	Name	Default	Function	Set "0"	Set "1"	Reset
7	Reserved	0	-	-	-	D
6	Reserved	0	-	-	-	D
5	Reserved	0	-	-	-	D
4	Reserved	0	-	-	-	D
3	Reserved	0	-	-	-	D
2	Reserved	0	-	-	-	D
1	Reserved	0	-	-	-	D
0	Reserved	0	-	-	-	D

© 2013 ROHM Co., Ltd. All rights reserved.

・ REG 79h TEST1 (Read / Write)

Bit	Name	Default	Function	Set "0"	Set "1"	Reset
7	Reserved	0	-	-	-	F
6	Reserved	0	-	-	-	F
5	Reserved	0	-	-	-	F
4	Reserved	0	-	-	-	F
3	Reserved	0	-	-	-	F
2	N/A	0	-	-	-	-
1	N/A	0	-	-	-	-
0	N/A	0	-	-	-	-

・ REG 7Ah TEST2 (Read / Write)

Bit	Name	Default	Function	Set "0"	Set "1"	Reset
7	N/A	0	-	-	-	-
6	N/A	0	-	-	-	-
5	Reserved	0	-	-	-	F
4	N/A	0	-	-	-	-
3	Reserved	0	-	-	-	F
2	Reserved	0	-	-	-	F
1	Reserved	0	-	-	-	F
0	N/A	0	-	-	-	-

・ REG 7Bh RST_CHECK (Read / Write)
REG 7Bh is the flag confirming reset completion of registers listed in page 15.

Bit	Name	Default	Function	Set "0"	Set "1"	Reset
7	RST_CHECKA	0	Reset A Completion Check Flag	0	1	A
6	RST_CHECKB	0	Reset B Completion Check Flag	0	1	B
5	N/A	0	-	-	-	-
4	N/A	0	-	-	-	-
3	N/A	0	-	-	-	-
2	N/A	0	-	-	-	-
1	N/A	0	-	-	-	-
0	N/A	0	-	-	-	-

© 2013 ROHM Co., Ltd. All rights reserved.

◆ Register Reset Operations

Type "A" : MODE Setting Bit (REG 70h, 72h, 74h, 76h, 7Bh[7])
Reset Conditions : PREVCC < 3.8V
or VREG < 2.0V
or MUTEB < 0.5V
or RST_CTLREG(75h[6]) = 1

Type "B" : DAC Setting Bit (REG 01h~09h, 7Bh[6])
Reset Conditions : PREVCC < 3.8V
or VREG < 2.0V
or MUTEB < 0.5V
or RST_DAC(75h[7]) = 1

Type "C" : Operational State (Latched) Output Bit (REG 77h[1,2,4])
Reset Conditions : PREVCC < 3.8V
or VREG < 2.0V
or MUTEB < 0.5V
or RST_CTLREG (75h[6]) = 1
or RST_PKTERR (75h[5]) = 1 (for PKT_ERR(77h[2]))
or RST_PKTSTOP (75h[4]) = 1 (for PKT_STOP(77h[1]))
or RST_SHORT (75h[2]) = 1 (for SHORT_LD(77h[4]))

Type "D" : Operational State (Continuously Updated) Output Bit 1 (REG 77h[0])
Reset Conditions : PREVCC < 2.0V
or VREG < 1.2V
or MUTEB < 0.5V

Type "E" : Reset Setting Bit (REG 75h)
Reset Conditions : Self-reset (If set to 1, automatically returns to "0" following reset operation)

Type "F" : Operational State (Continuously Updated) Output Bit 2 (REG 77h[3])
Reset Conditions : PREVCC < 3.8V
or VREG < 2.0V
or MUTEB < 0.5V

Reset Operations

Reset condition		DAC REG	Control REG												
		02h ~ 05h, 08h, 09h	70h	72h	74h	75h	76h	77h						7Bh	
								D7	D4	D3	D2	D1	D0	D7	D6
Hard	PREVCC < 2.0V	○	○	○	○		○	○	○	○	○	○	○	○	○
	PREVCC < 3.8V	○	○	○	○		○	○	○	○	○	○		○	○
	MUTEB < 0.5V	○	○	○	○		○	○	○	○	○	○	○	○	○
Soft	RST_SHORT 75h[2] = 1							*1	○						
	RST_PKTSTOP 75h[4] = 1							*1				○			
	RST_PKTERR 75h[5] = 1							*1			○				
	RST_CTLREG 75h[6] = 1		○	○	○		○	*1						○	
	RST_DAC 75h[7] = 1	○						*1							○
Self reset						○									

*1 Reset conditions of REG 77h[7] are dependent upon REG 77h[4]-77h[0].

© 2013 ROHM Co., Ltd. All rights reserved.

■ SPI Input / Output Terminal Processing

Provided with input terminals SLV, SCLK and SDI, and output terminal SDO, as serial interfaces. Input terminals SLV, SCLK and SDI have built-in 100kΩ (Typ) pull-up/pull-down resistor. Output terminal SDO is able to output the voltage set at SHV as high level voltage in 3-state CMOS output.

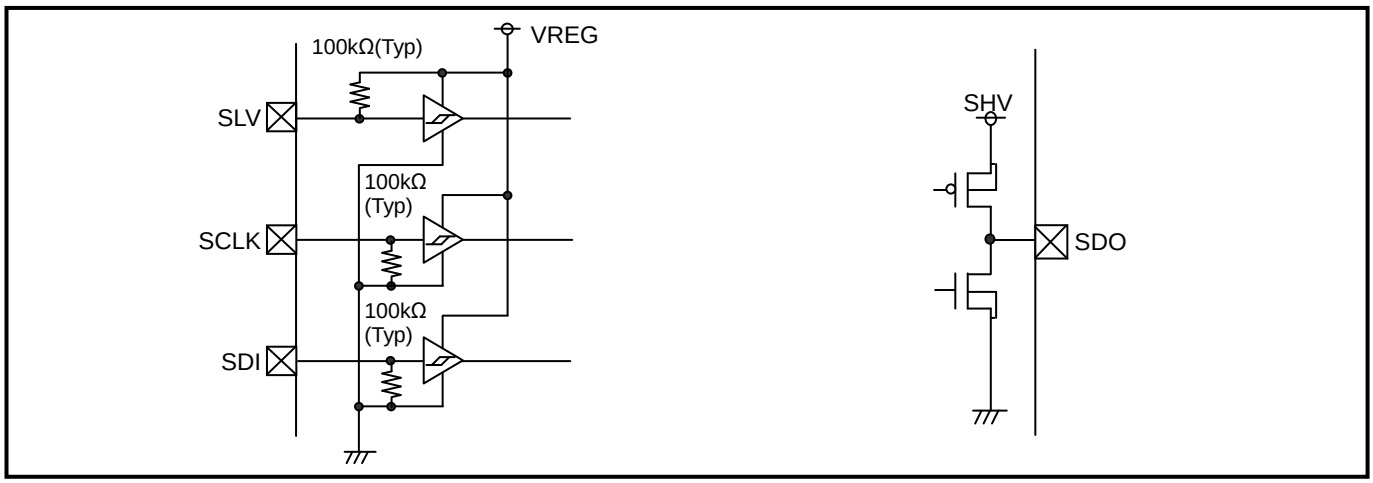

Figure 9. SPI Input / Output Terminal Processing

© 2013 ROHM Co., Ltd. All rights reserved.

■ DAC and Gain Setting

◆ Actuator (FC, TK)

Suppose that voltage difference between positive/negative outputs is V_{OUT}, V_{OUT} can be expressed as follows.

$V_{OUT} = G_{VACT} \times V_{DAC}$

Here, G_{VACT} value will be different as below depending upon gain mode settings.

Low Gain Mode (REG 74h[5] GAIN_SELFC, REG74h[4] GAIN_SELTK = 0 (Default))
G_{VACT1} = 3.85 times (11.7dB)

High Gain Mode (GAIN_SELFC, GAIN_SELTK = 1)
G_{VACT2} = 7.67 times (17.7dB)

V_{DAC}, the DAC output voltage, can be obtained from DAC register settings through the following equation.

MSB=0:

$V_{DAC} = 1.0\times(bit[10]\times0.5^1+bit[9]\times0.5^2+bit[8]\times0.5^3+\ldots+bit[0]\times0.5^{11})$

MSB=1::

$V_{DAC} = (-1.0)\times(\hat{}bit[10]\times0.5^1+\hat{}bit[9]\times0.5^2+\hat{}bit[8]\times0.5^3+\ldots+\hat{}bit[0]\times0.5^{11}+0.5^{11})$

DAC format (DFC, DTK)

REG	MSB Digital input (BIN) LSB	Hex	Dec	V_{DAC} [V]	V_{OUT} [V]*
02h(DFC), 03h(DTK)	1000_0000_0000	800h	-2048	-0.9995	-3.848
	1000_0000_0001	801h	-2047	-0.9995	-3.848
	1000_0000_0010	802h	-2046	-0.9990	-3.846
	1111_1111_1111	FFFh	-1	-0.0005	-0.002
	0000_0000_0000	000h	0	0	0.000
	0000_0000_0001	001h	+1	+0.0005	+0.002
	0111_1111_1110	7FEh	+2046	+0.9990	+3.846
	0111_1111_1111	7FFh	+2047	+0.9995	+3.848

* In low gain mode setting. Output voltage saturation is not taken into account in the table.

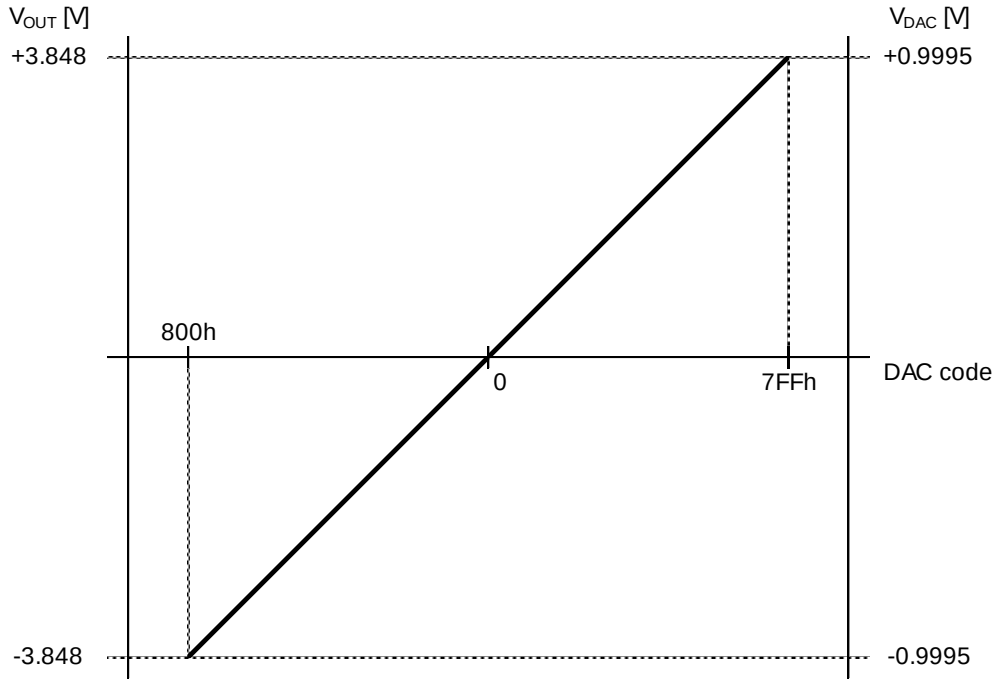

Figure 10. DAC Setting vs. V_{DAC} / V_{OUT} (in low gain mode)

© 2013 ROHM Co., Ltd. All rights reserved.

◆Loading (LD)

Suppose that voltage difference between positive/negative outputs is V_{OUT}, V_{OUT} can be expressed as follows.

$V_{OUT} = G_{VLD} \times V_{DAC}$

Here, G_{VLD} value will be different as below depending upon gain mode settings.

Low Gain Mode (REG 74h[1] GAIN_SELLD = 0 (Default))
G_{VLD1} = 7.24 times (17.2dB)

High Gain Mode (GAIN_SELLD =1)
G_{VLD2} = 8.51 times (18.7dB)

V_{DAC}, the DAC output voltage, can be obtained from DAC register settings through the following equation.

MSB=0:

$V_{DAC} = 1.0\times(bit[10]\times0.5^1+bit[9]\times0.5^2+bit[8]\times0.5^3+\ldots+bit[0]\times0.5^{11})$

MSB=1 :

$V_{DAC} = (-1.0)\times(\hat{}bit[10]\times0.5^1+\hat{}bit[9]\times0.5^2+\hat{}bit[8]\times0.5^3+\ldots+\hat{}bit[0]\times0.5^{11}+0.5^{11})$

DAC format (DLD)

REG	MSB Digital input (BIN) LSB	Hex	Dec	V_{DAC} [V]	V_{OUT} [V]*
09h(DLD)	1000_0000_0000	800h	-2048	-0.9995	-7.236
	1000_0000_0001	801h	-2047	-0.9995	-7.236
	1000_0000_0010	802h	-2046	-0.9990	-7.233
	1111_1111_1111	FFFh	-1	-0.0005	-0.004
	0000_0000_0000	000h	0	0	0.000
	0000_0000_0001	001h	+1	+0.0005	+0.004
	0111_1111_1110	7FEh	+2046	+0.9990	+7.233
	0111_1111_1111	7FFh	+2047	+0.9995	+7.236

* In low gain mode setting. Output voltage saturation is not taken into account in the table.

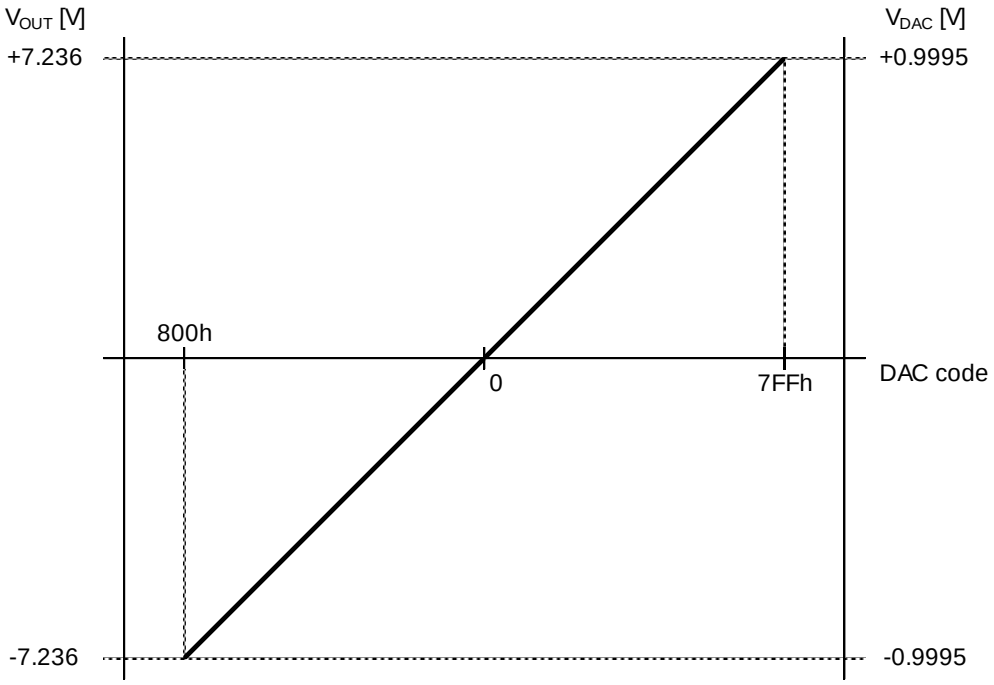

Figure 11. DAC Setting vs. V_{DAC} / V_{OUT} (in low gain mode)

© 2013 ROHM Co., Ltd. All rights reserved.

◆ Sled (SL1, SL2)

Suppose that $I_{O\ PEAK}$ represents peak output current, $I_{O\ PEAK}$ can be expressed in the following ways.

$I_{O\ PEAK} = 0$ ($|V_{DAC}| < V_{DZSL}$)
$I_{O\ PEAK} = gm_{SL} \times |V_{DAC}|$ ($gm_{SL} \times |V_{DAC}| < I_{LIMSL}$)
$I_{O\ PEAK} = I_{LIMSL}$ ($gm_{SL} \times |V_{DAC}| > I_{LIMSL}$)

Where V_{DZSL} is input deadzone (single-sided) of 15mV (Typ). The gm_{SL} is output/input gain and I_{LIMSL} is output limit current, and they can be obtained respectively as follows.

$gm_{SL} = 0.616 / R_{SLRNF}$ [A/V]
$I_{LIMSL} = 0.52 / R_{SLRNF}$ [A]

V_{DAC}, the DAC output voltage, can be obtained from DAC register settings through the following equation.

MSB=0

$V_{DAC} = 1.0\times(bit[10]\times0.5^1+bit[9]\times0.5^2+bit[8]\times0.5^3+\ldots+bit[2]\times0.5^9)$

MSB=1

$V_{DAC} = (-1.0) \times (\hat{}bit[10]\times0.5^1+\hat{}bit[9]\times0.5^2+\hat{}bit[8]\times0.5^3+\ldots+\hat{}bit[2]\times0.5^9+0.5^9)$

DAC format (DSL1, DSL2)

REG	MSB Digital input (BIN) LSB	Hex	Dec	V_{DAC} [V]	$I_{O\ PEAK}$ [A]*
04h(DSL1), 05h(DSL2)	1000_0000_0000	800h	-2048	-0.9980	-1.098
	1000_0000_0100	804h	-2044	-0.9980	-1.098
	1111_1110_0000	FE0h	-32	-0.0156	-0.017
	1111_1110_0100	FE4h	-28	-0.0137	0
	1111_1111_1100	FFCh	-4	0.0020	0
	0000_0000_0000	000h	0	0	0
	0000_0000_0100	004h	+4	+0.0020	0
	0000_0001_1100	01Ch	+28	+0.0137	0
	0000_0010_0000	020h	+32	+0.0156	+0.017
	0111_1111_1000	7F8h	+2040	+0.9961	+1.096
	0111_1111_1100	7FCh	+2044	+0.9980	+1.098

*Output voltage saturation and limit current setting are not taken into account in the table. Condition:R_{SLRNF}=0.56Ω

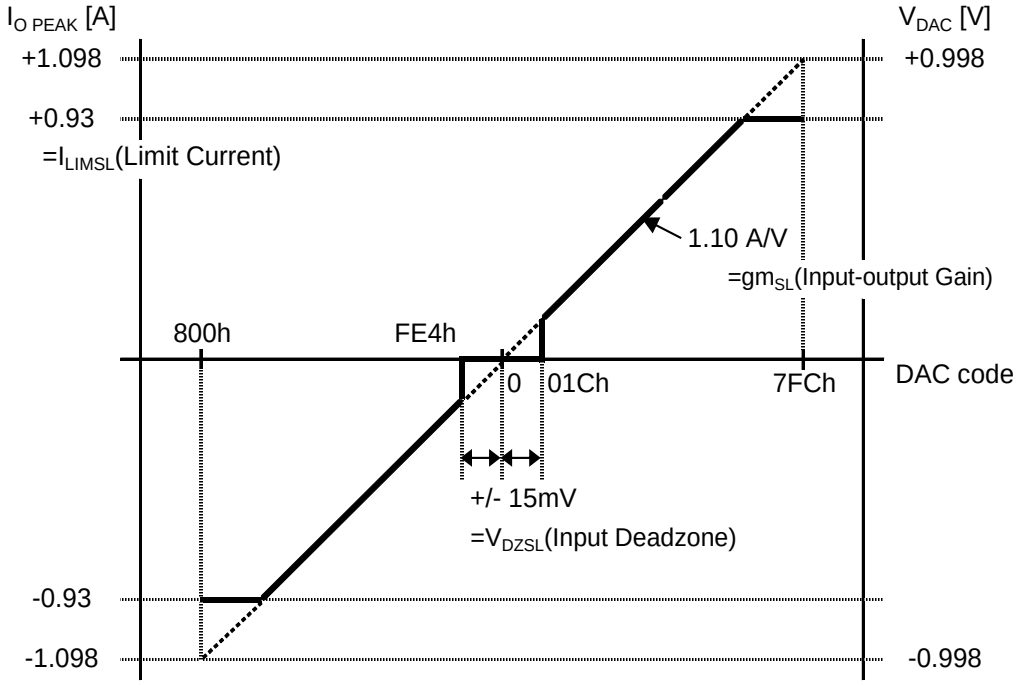

Figure 12. $I_{O\ PEAK}$ Characteristics (When set as R_{SLRNF}=0.56 Ω).

© 2013 ROHM Co., Ltd. All rights reserved.

◆ Spindle (SP)

Suppose that $I_{O\ PEAK}$ represents peak output current, $I_{O\ PEAK}$ can be expressed in the following ways.

$I_{O\ PEAK} = 0$ ($|V_{DAC}| < V_{DZSP}$)
$I_{O\ PEAK} = gm_{SP} \times |V_{DAC}|$ ($gm_{SP} \times |V_{DAC}| < I_{LIMSP}$)
$I_{O\ PEAK} = I_{LIMSP}$ ($gm_{SP} \times |V_{DAC}| > I_{LIMSP}$)

Where V_{DZSP} is input deadzone (single-sided) of 10mV (Typ). The gm_{SP} is output/input gain and I_{LIMSP} is output limit current, and they can be obtained respectively as follows.

$gm_{SP} = 0.409 / R_{SPRNF}$ [A/V]
$I_{LIMSP} = 0.35 / R_{SPRNF}$ [A]

V_{DAC}, the DAC output voltage, can be obtained from DAC register settings through the following equation.

MSB=0 :

$V_{DAC} = 1.0\times(bit[10]\times0.5^1+bit[9]\times0.5^2+bit[8]\times0.5^3+\ldots+bit[0]\times0.5^{11})$

MSB=1 :

$V_{DAC} = (-1.0)\times(\hat{}bit[10]\times0.5^1+\hat{}bit[9]\times0.5^2+\hat{}bit[8]\times0.5^3+\ldots+\hat{}bit[0]\times0.5^{11}+0.5^{11})$

DAC format (DSP)

REG	MSB Digital input (BIN) LSB	Hex	Dec	V_{DAC} [V]	$I_{O\ PEAK}$ [A]※
08h(DSP)	1000_0000_0000	800h	-2048	-0.9995	-1.239
	1000_0000_0001	801h	-2047	-0.9995	-1.239
	1111_1110_1011	FEBh	-21	-0.0103	-0.013
	1111_1110_1100	FECh	-20	-0.0098	0
	1111_1111_1111	FFFh	-1	-0.0005	0
	0000_0000_0000	000h	0	0	0
	0000_0000_0001	001h	+1	+0.0005	0
	0000_0001_0100	014h	+20	+0.0098	0
	0000_0001_0101	015h	+21	+0.0103	+0.013
	0111_1111_1110	7FEh	+2046	+0.9990	+1.238
	0111_1111_1111	7FFh	+2047	+0.9995	+1.239

*Output voltage saturation and limit current setting are not taken into account in the table. Condition:R_{SPRNF}=0.33Ω

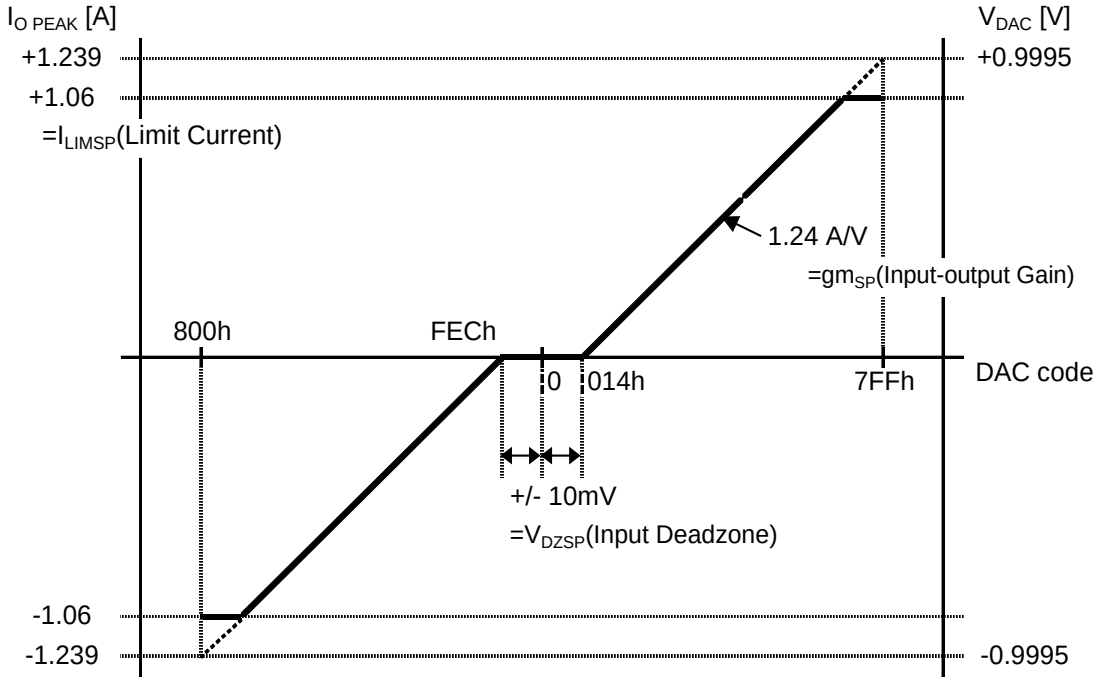

Figure 13. $I_{O\ PEAK}$ Characteristics (When set as R_{SPRNF}=0.33 Ω).

© 2013 ROHM Co., Ltd. All rights reserved.

■ Description of Driver Operations

◆ Sled Motor Driver

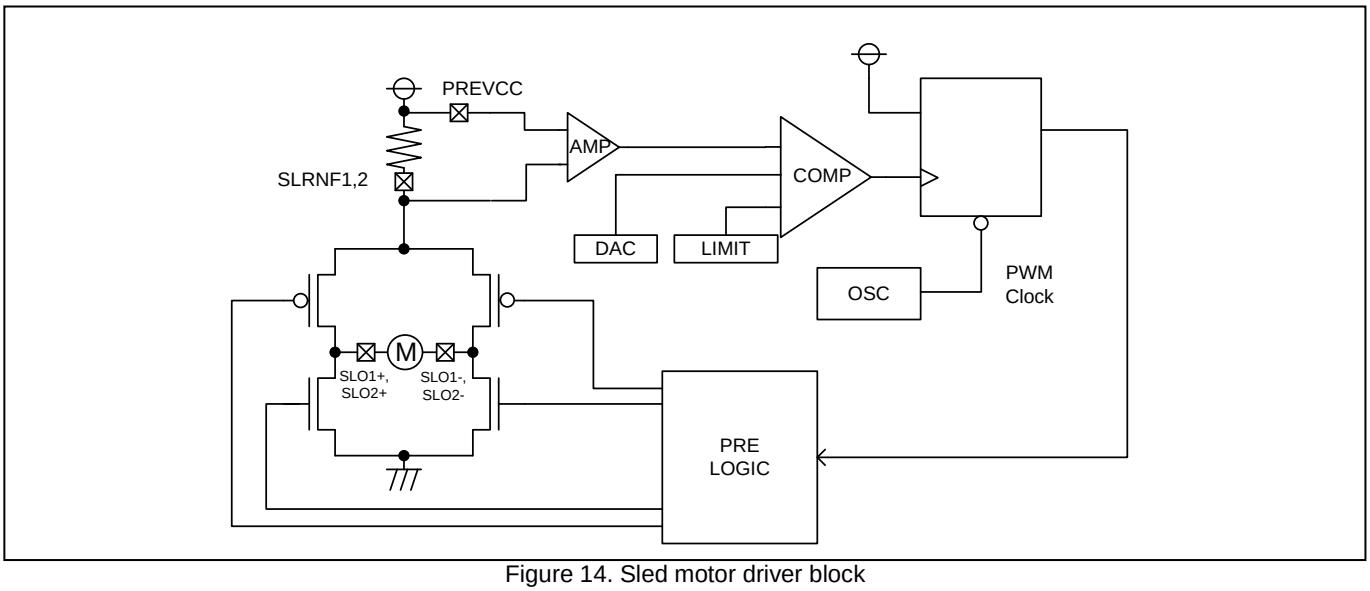

Figure 14. Sled motor driver block

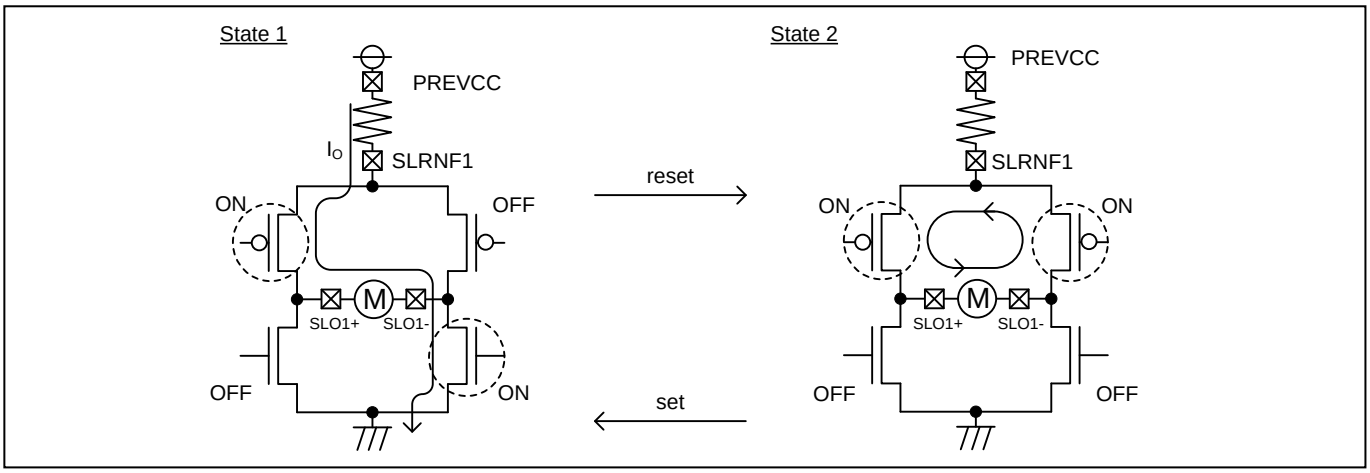

Figure 15. Current Paths in Set [State 1] and Reset [State 2]

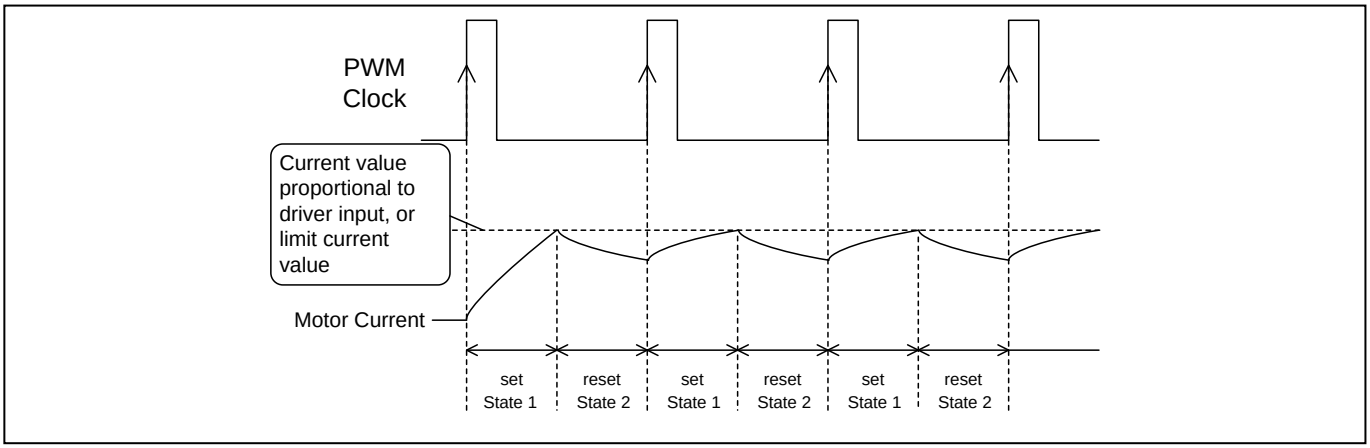

Figure 16. Sled Motor Driver Operation Timing Chart

Set [State1] : Output turned ON at the rise of PWM clock --> Load current supplied from PREVCC.
Reset [State2] : Output turned OFF when load current increases to reach current value proportional to input or limit current value --> Load current regenerated by L component of the motor through the path shown in State 2 diagram.

© 2013 ROHM Co., Ltd. All rights reserved.

◆ Spindle Driver

1. Spindle Driver Input-Output Characteristics

Figure 17 shows input-output characteristics of the average current detection control and the peak current detection control. This IC controls output by detecting peak current. Linearity of the input/output characteristics is improved compared with the one in the average current detection method.

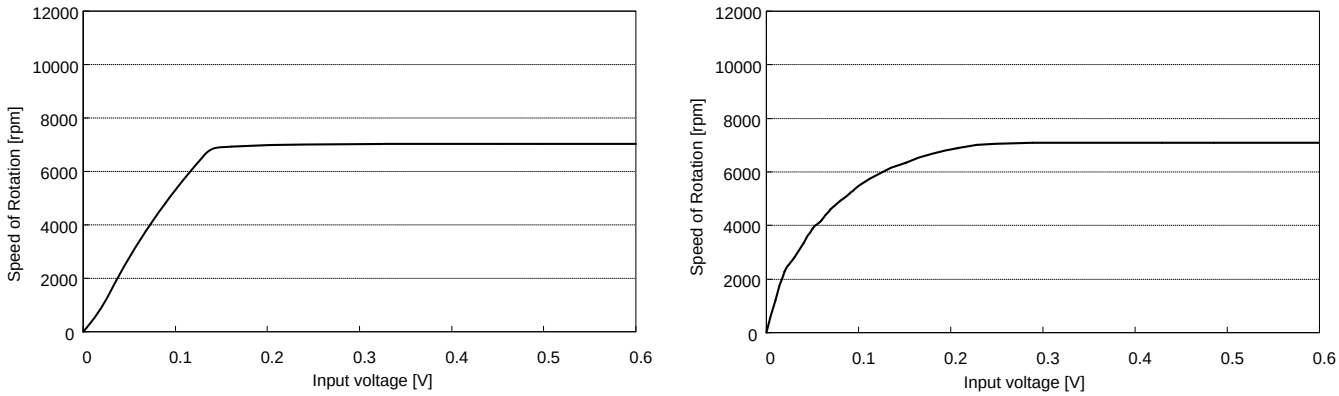

(a) Peak Current Control Method (BD8255MUV-M) (b) Average Current Control Method

Figure 17. Spindle Driver Input-Output Characteristics

Difference in input/output characteristics due to control method can be explained as below.
Motor coil comprises not only pure inductance but also impedance component. Suppose that V_O represents peak value of output pulse, I_O, current which flows into the motor when output pulse is turned on, can be expressed in the following ways.

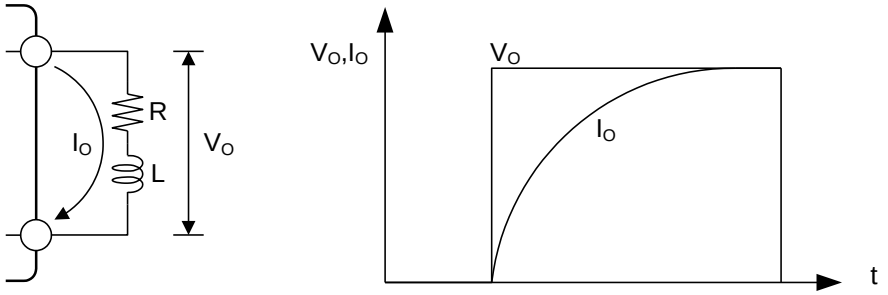

$$V_O = I_O(t) \times R + L \times \frac{dI_O(t)}{dt}$$

$$I_O = \frac{V_O}{R}(1 - e^{-\frac{R}{L}t})$$

Figure 18. Current Waveform Including Impedance Component

You can see from the above equation that motor current Io follows a curve of natural logarithm. If you try to express this as motor current characteristics as opposed to input voltage controlled by the respective methods, you will get Figure 19.
Spindle motor speed is proportional to motor current. In case of PWM driver, motor current is roughly equivalent to peak current because it includes regenerative current. In the peak current control, therefore, motor current (rotation speed) becomes proportional to input voltage.
In contrast, in the average current control, average value of supply current (integral of supply current) becomes proportional to input voltage. So motor current (rotation speed) as opposed to input voltage roughly follows a curve of natural logarithm (Figure 19. (b)). And therefore, you get higher gain in low speed range.

© 2013 ROHM Co., Ltd. All rights reserved.

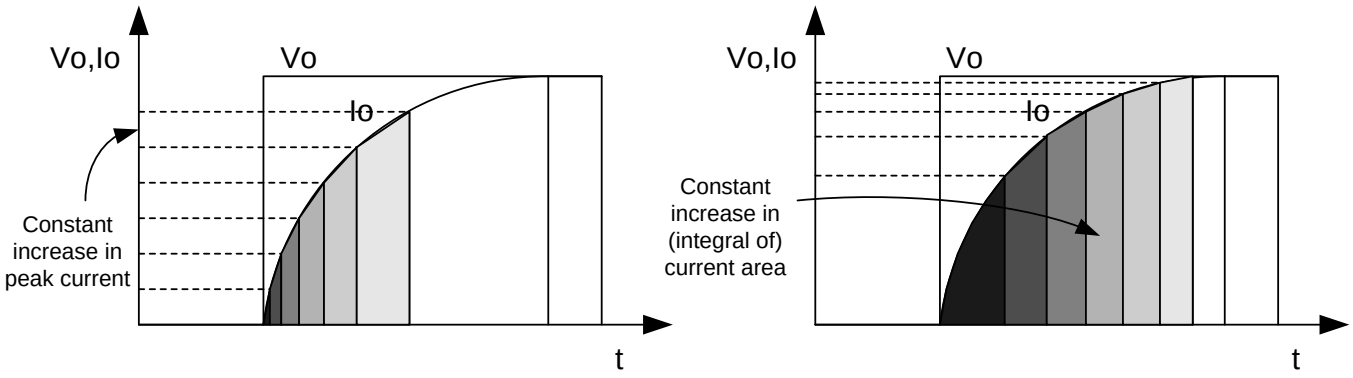

(a) Peak Current Control (b) Average Current Control

Figure 19. Input Voltage vs. Motor Current

2. Current Limit Operation.

Figure 20 shows the operation timing chart.

In this IC, flip-flop is activated based on a clock signal generated by the built-in triangular wave generator to generate PWM pulse. The spindle driver starts operation at the rising edge of internal clock. Short brake mode is activated if peak current defined by limit current or gain is detected, and no output pulse is delivered until next clock input. Both during limit current detection and usual peak current detection, it operates at PWM oscillating frequency generated by the same internal clock.

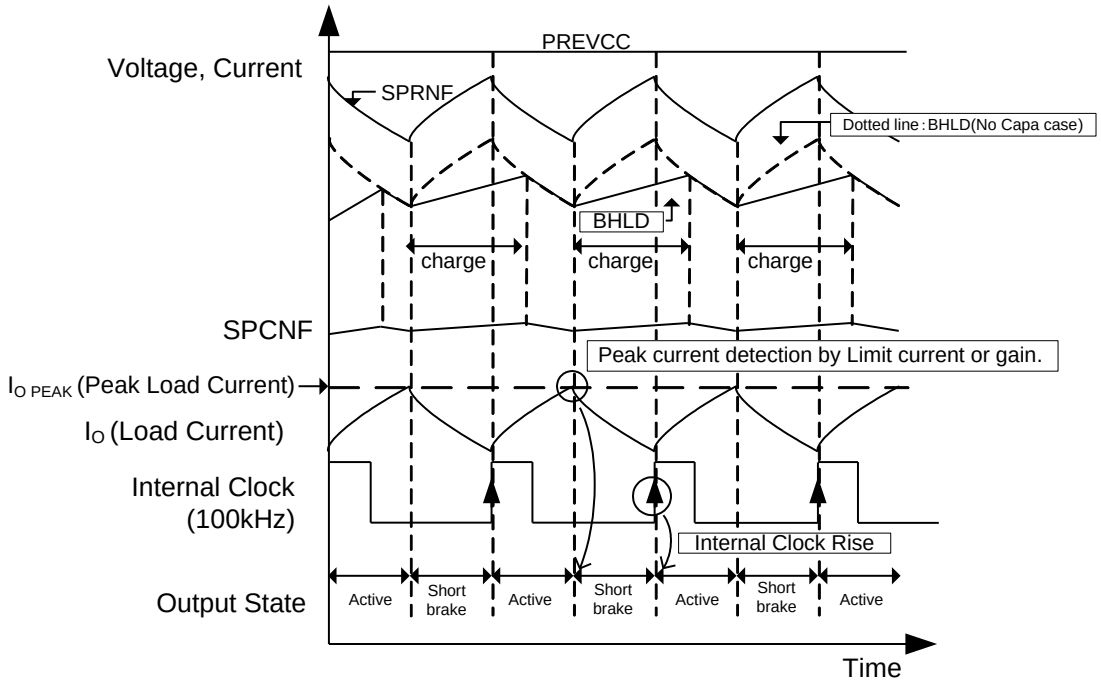

Figure 20. Spindle Driver Operation Timing Chart

© 2013 ROHM Co., Ltd. All rights reserved.

3. Role of Capacitors of BHLD and SPCNF Terminals

Figure 21 shows a block diagram of the spindle driver.

In this IC, peak current control method is realized by monitoring Io, the load current flowing in the spindle motor, at SPRNF terminal, and holding the peak current in C_{BHLD}, the capacitor connected to BHLD terminal. Charging time of BHLD terminal is a time constant defined by capacity of C_{BHLD} and 200 kΩ (Typ) internal resistance.

C_{SPCNF}, the capacitor of SPCNF terminal, influences f_c, the cut-off frequency, of the spindle driver control loop. f_c can be expressed in the following formula. Where R_{OERR} is internal error amplifier output impedance of approximately 700 kΩ (Typ).

$$f_c = \frac{1}{2\pi C_{SPCNF} R_{OERR}}$$

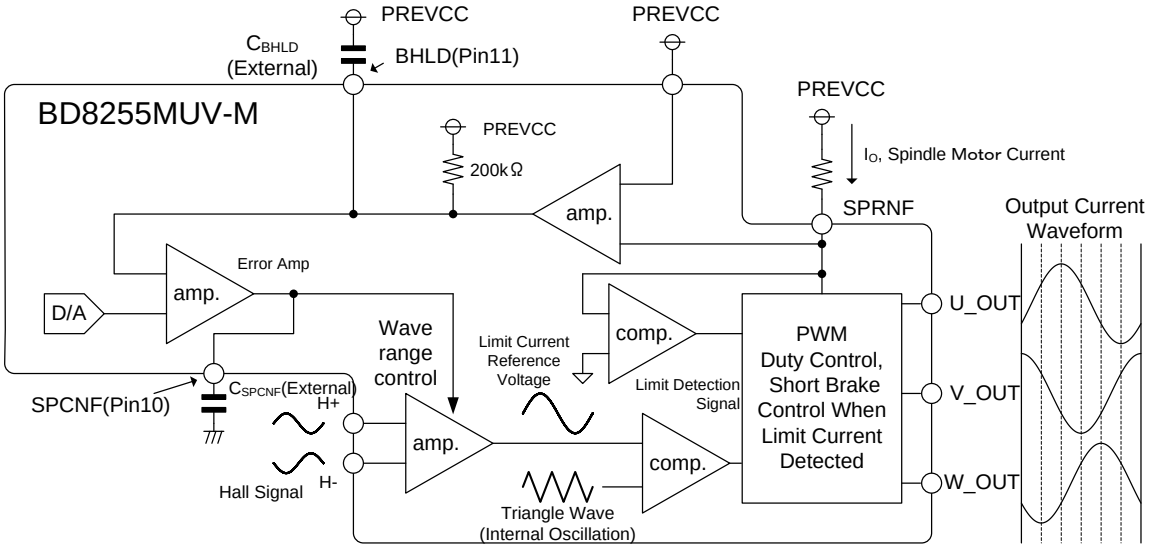

Figure 21. Spindle Driver Block Diagram

4. Spindle Hall Signal Setting

In this IC, as shown in Figure 21, low noise (silence) is realized by controlling output current into a sine wave. Hall signal amplified according to REG 08h DSP is used to control the output current. So, if amplitude of the hall signal is too small, amplitude of the output current will also be too small, and rotation speed will become too low. Therefore, make sure that input level of the hall signal be 50 mV (input level at hall amplifier: V_{HIM}) or greater as shown in Figure 22. Also make sure that waveform of the hall signal be as close as possible to sine wave.

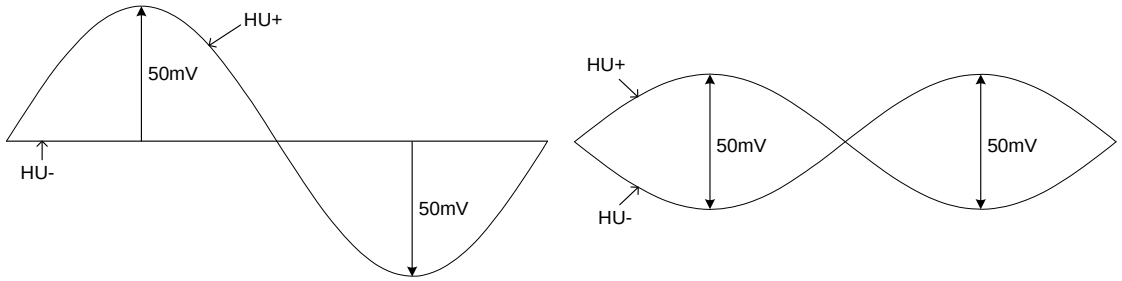

Figure 22. Minimum Amplitude of Hall Input (Example of HU+ and HU- Input).

© 2013 ROHM Co., Ltd. All rights reserved.

5. Hall input (Pin 2 to Pin 7) / Hall bias (Pin 8) (Spindle)
Hall elements can be connected either in series or in parallel as shown in Figure 23.
Hall input voltage should be set within the range of 1.5 V to 3.8 V (In-phase input voltage range of hall amplifier: V_{HICM}).

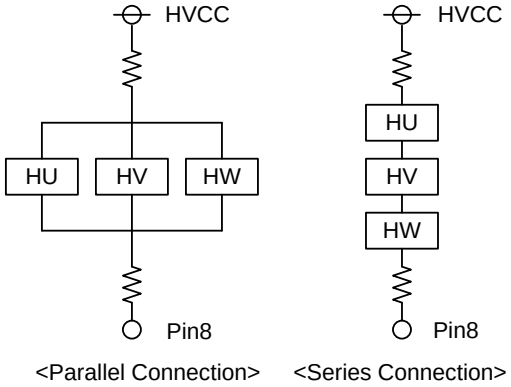

Figure 23. Example of Hall Elements Connection

6. FG Pulse
3FG is output to FG terminal. Pull-up resistor of FG is recommended to be 3.3 kΩ or less. If the resistance setting is higher than that, High logic of FG output can be reversed to become "Low" as soon as spindle output becomes Hi-Z.
Since FG pulse is generated from hall output signal, it can become unstable if the hall signal catches noise. Radiation noise on circuit patterns or flexible cables should be avoided as much as possible. Against any remaining noise, it is recommended to insert a capacitor (around 0.01 µF) between positive and negative sides of the hall signal.

7. Reverse brake
When reverse brake is done coming from high speed, take note of the counter-electromotive force. Also, consider the speed of motor rotation to ensure sufficient output current when using the reverse brake. Rated current of spindle outputs are 1.66 A.

8.Capacitor between SPVM-SPGND
There is change in voltage and current because of the steep drive PWM. The capacitor between SPVM-SPGND is placed in order to suppress the fluctuations due to the SPVM voltage. However, the effect is reduced if this capacitor is placed far from the IC due to the effect of line impedances. Therefore, this capacitor should be placed near the IC.

© 2013 ROHM Co., Ltd. All rights reserved.

9. Spindle Dricer Input-Output Timing Chart

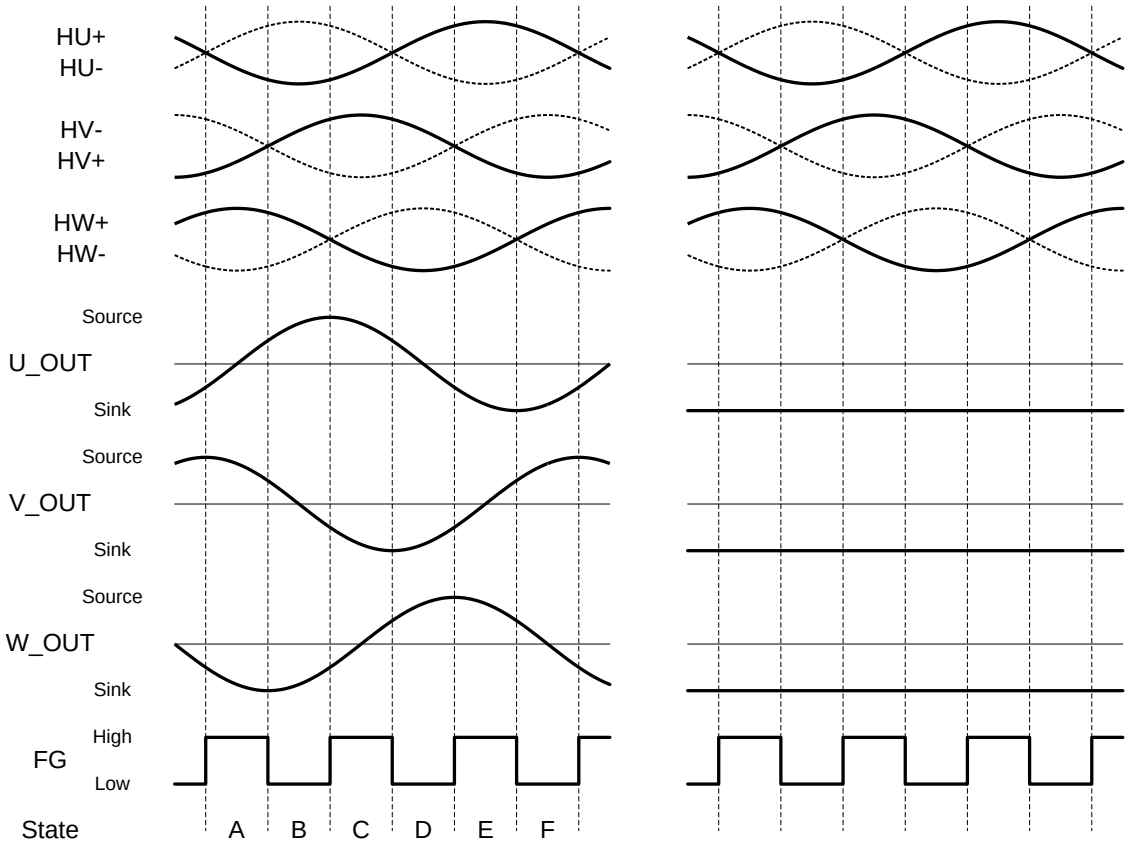

(a) Forward Mode
(DSP>000h)

(b) Short Brake Mode
(DSP<000h, REG 74h[6]=0)

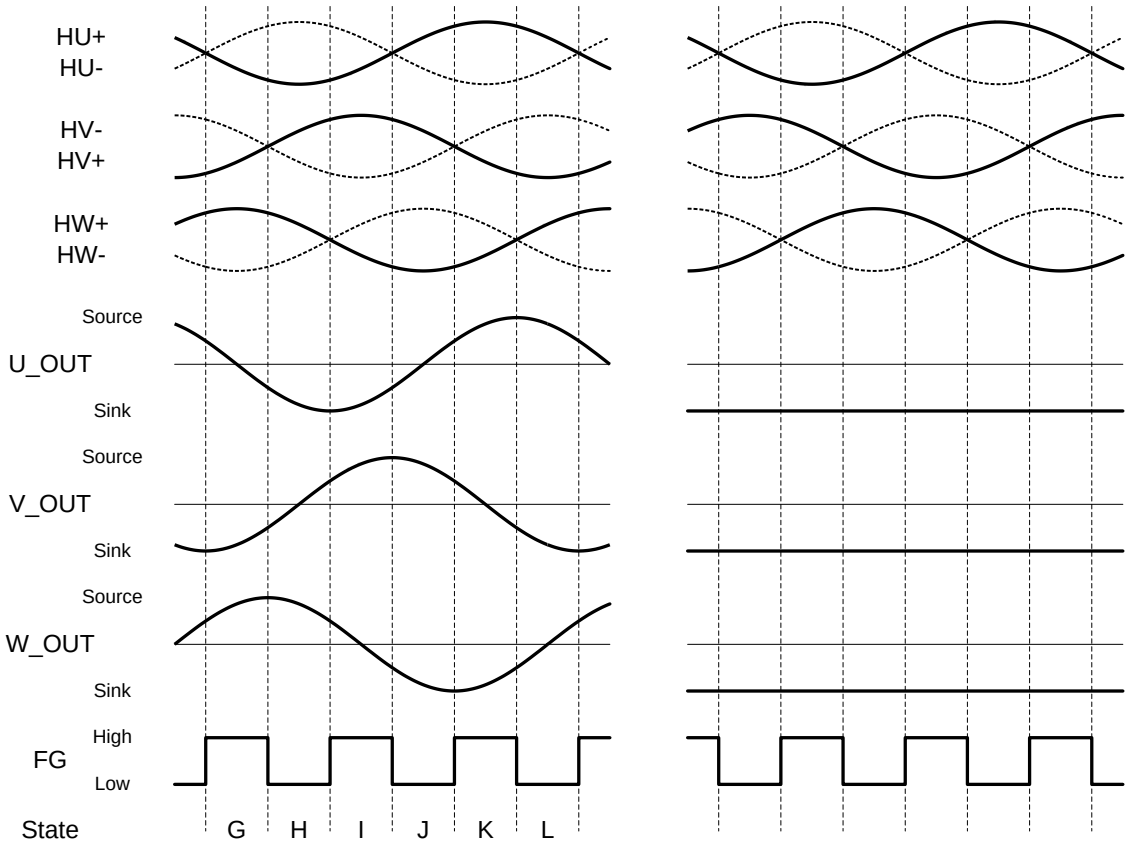

(c) Reverse Brake Mode
(DSP<000h, REG 74h[6]=1)

(d) Anti-reverse Mode
(DSP<000h, REG 74h[6]=1, after reverse detected)

© 2013 ROHM Co., Ltd. All rights reserved.

Start-up Operation

1. Startup Signals
   - ・5V Power supply : PREVCC, AVM, SPRNF, SLRNF1, SLRNF2
   - ・3.3V Power supply : SHV
   - ・MUTEB (Input terminal) : Standby (Low) / Active (High) setting for whole IC
   - ・XXX_PSB (SPI control signal) : Power save (0) / Active (1) setting for control circuits of 6ch blocks
   - ・XXX_EN (SPI control signal) : Open (0) / Active (1) setting for output of 6ch blocks
   - ・MUTEB_D (Internal signal) : Standby / active control for analog block
     There may be 15 µs (Max) delay from MUTEB.
   - ・RESETB (Internal signal) : Reset /active control for SPI block and logic block

2. Start-up and Shut-down Sequences
   Make sure to turn on 5V power supply before 3.3V power supplys. If 3.3V power is turned on first, there is a possibility that SDO Pin output unexpected signal. There are no special requirements on sequence of power shut down.

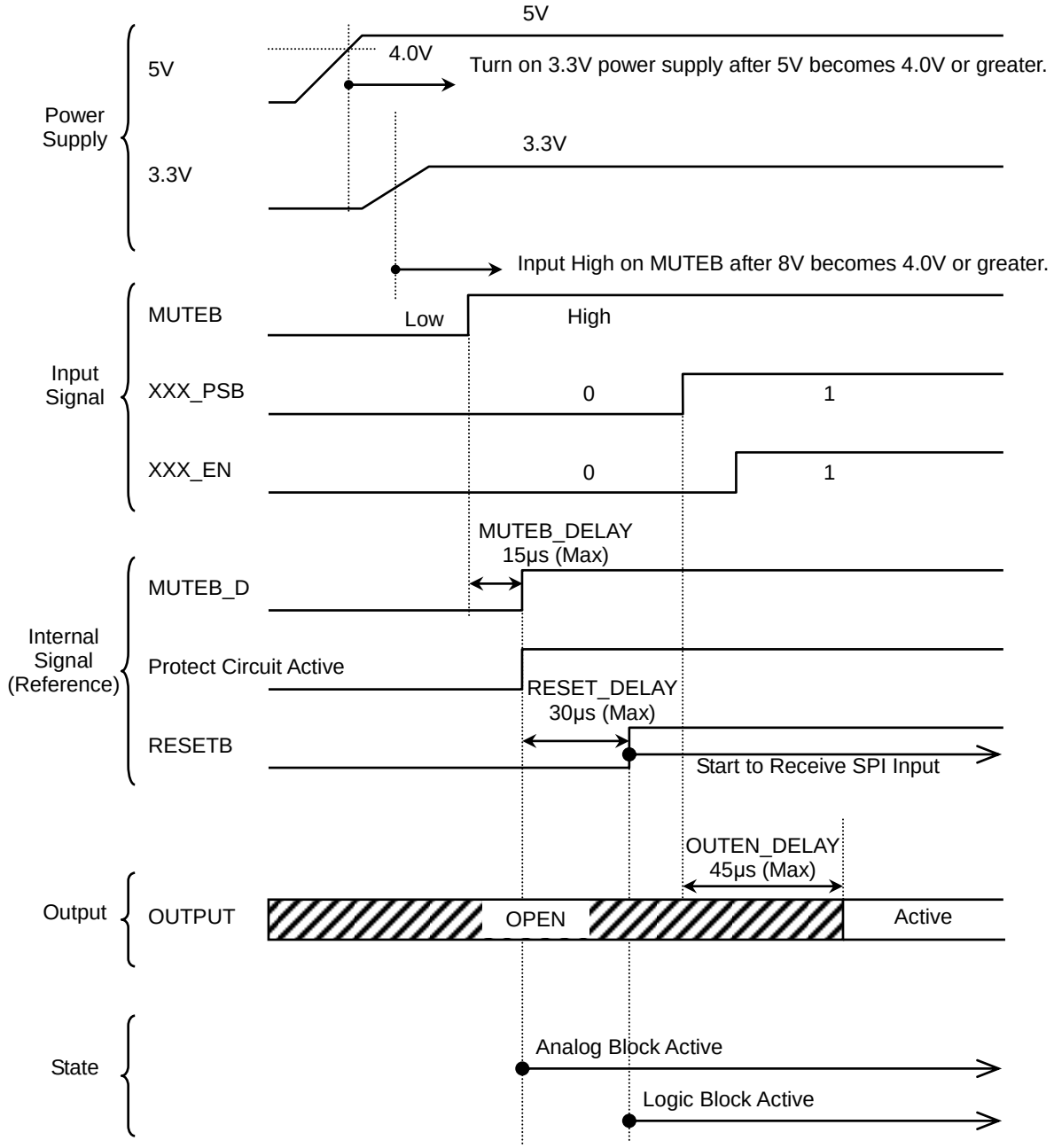

© 2013 ROHM Co., Ltd. All rights reserved.

Description of Functions

1. Output Voltage State (Spindle / Sled Motor)

	Spindle	Sled Motor
Under Input Dead Zone	Hi-Z	Short Brake
Under Current Limit Operation	Short Brake	Short Brake

2. PWM Oscillation Frequency (Spindle / Sled Motor)
PWM oscillation of the spindle and the sled motor is internally free-running. Oscillation frequency is 100 kHz (Typ).

3. UVLO (PREVCC Drop Mute)
If PREVCC terminal voltage becomes 3.8 V (Typ) or less, or VREG terminal voltage becomes 2.0 V (Typ) or less, output of all channels turns OFF (Hi-Z). This IC continue the operation until UVLO turns on under the voltage less than the recommended operating condition.
* REG 77h[0] UVLO_PREVCC is set to "1" while UVLO is activated. And UVLO_PREVCC is reset to "0" if PREVCC terminal voltage becomes 2.0 V (Typ) or less, or VREG terminal voltage becomes 1.2 V (Typ) or less, but this is below the operational voltage range and some register state may be unsustainable depending on degree of voltage drop.

4. Thermal Shutdown
Thermal shutdown (over temperature protection circuit) is built-in in order to prevent thermal breakage of IC.
The package should be used within acceptable power dissipation, but in case where it is left beyond the acceptable power dissipation, junction temperature rises, and thermal shutdown is activated at 175°C (Typ) and all the channel outputs are turned OFF (Hi-Z).
Then, when the junction temperature falls down to 150°C (Typ), the channel outputs are turn ON again. Note that even though the thermal shut down is operating, IC may be overheated and end up broken if heat is continuously applied from outside.
* REG 77h[3] TSD is set to "1" while thermal shutdown is activated, but this condition is beyond the rated temperature and all register states may be unsustainable depending on degree of temperature rise.

5. Loading Supply/Ground-Fault Protection
This is the function to prevent breakage of output POWER MOS when there exist the conditions that may break the output POWER MOS if loading output is supply/ground-faulted.
・Supply-fault occurs when SINK-side POWER MOS is ON, and the supply-fault protection is performed if output terminal voltage of (Power Supply - 1 Vf) or greater and supply-fault current are detected at the same time. Here, the output is OFF-latched. Note that 1 Vf = 0.7V (Typ).
・Ground-fault occurs when SOURCE-side POWER MOS is ON, and the ground-fault protection is performed if ground-fault current is detected. Here, the output is OFF-latched. Note that the ground-fault detection current is dependent on the output voltage. See Figure 24.
* REG 77h[4] SHORT_LD is set to "1" if the loading supply/ground-fault protection is activated.
* You can reset the protection mode by resetting REG 75h[2] SHORT_RESET if the protection mode is activated and the output is OFF-latched.
* High frequency noise suppression filter is built in the supply/ground-fault protection circuit, but the supply/ground-fault protection may be activated against the noise of 10 μs (Typ) or greater.

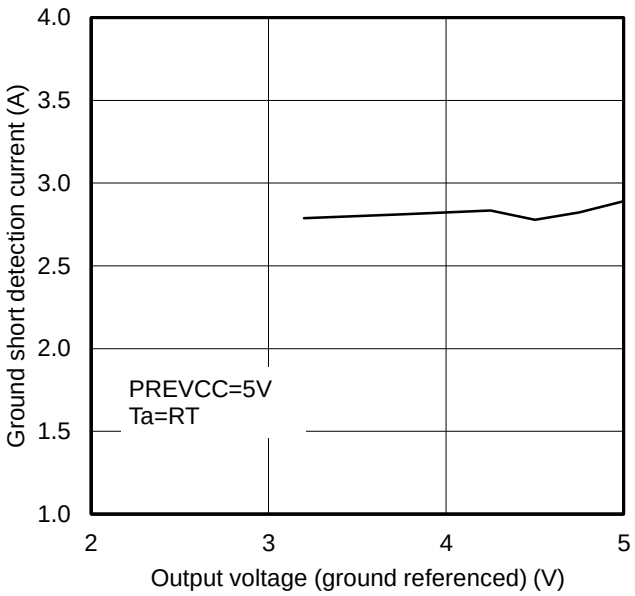

Figure 24. Output voltage vs Ground short detection current

© 2013 ROHM Co., Ltd. All rights reserved.

6. Packet Bit Counts Error

Serial input signal of this IC consists of 16 bits in one packet. If counts of the SCLK rising during the period between falling and rising of SLV are anything but 16 times, it is determined as a erroneous packet and REG 77h[2] PKT_ERR is set to "1". Any data determined as an erroneous packet are nullified, and the registers maintain the state immediately before the error. Note that PKT_ERR remains at "1" even though the next 1 packet is sent and counts of the clock rising during the period between falling and rising of SLV are 16 times. But this error will not open (i.e. turn off) the output circuit.

7. Packet Watchdog Timer

If REG 76h[5,4] PKTSTOP_TIME is preset to anything but "00" and there is no valid packet (16 bits) rising of SLV within this preset time period, REG 77h[1] PKT_STOP will be set to "1" and all outputs will be OFF-latched (Hi-Z).

* You can reset the protection mode by resetting REG 75h[4] RST_PKTSTOP if the protection mode is activated and the output is OFF-latched.

8. ERROUT Terminal

If either the packet bit counts error or the packet watchdog timer is activated, this terminal switches to High as an error flag.

9. VREG Terminal

VREG terminal is the regurator output for internal blocks. A 0.01μF compensating capacitor shall be connected across the VREG terminal. Any value less than 0.01μF, or no compensating capacitor will result in system instablity.

© 2013 ROHM Co., Ltd. All rights reserved.

Noise Suppression

The following are possible causes of noise of the PWM driver.

A. Noise from power line or ground

B. Radiated noise

- Countermeasures against A -

(1) Reduce impedance in wiring for the driver's 5 V power supply (SPRNF, SLRNF1, SLRNF2, PREVCC, AVM) and power GND (SPGND, SLGND, ACTGND) lines where high current flows. Make sure that they be separated from power supply lines of other devices at the root so that they do not have common impedance. (Figure 25.)

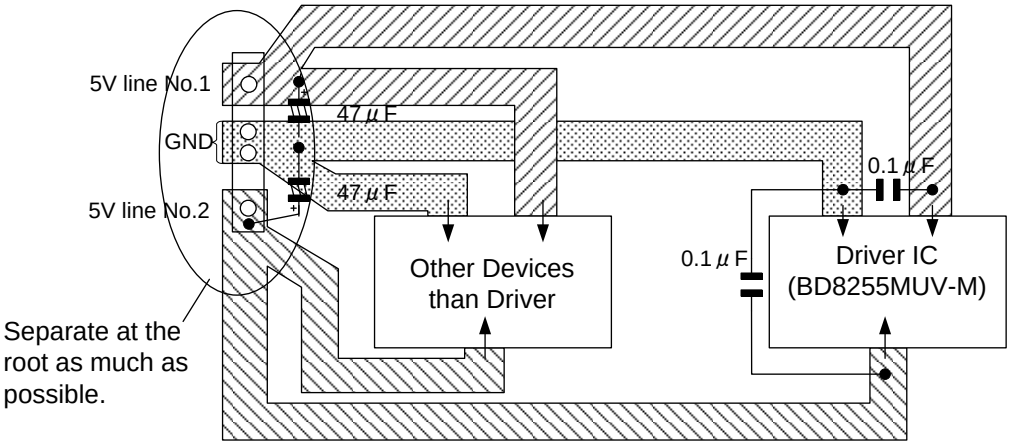

Figure 25. Pattern Example

(2) Provide a low ESR electrolytic capacitor between the power terminal and the ground terminal of the driver to achieve strong stabilization. Provide a ceramic capacitor with good high frequency property next to the IC.
Also provide a ceramic capacitor with good high frequency property between RNF and GND. (Figure 26.)
Then power supply ripple due to PWM switching and spindle motor rotation can be reduced.

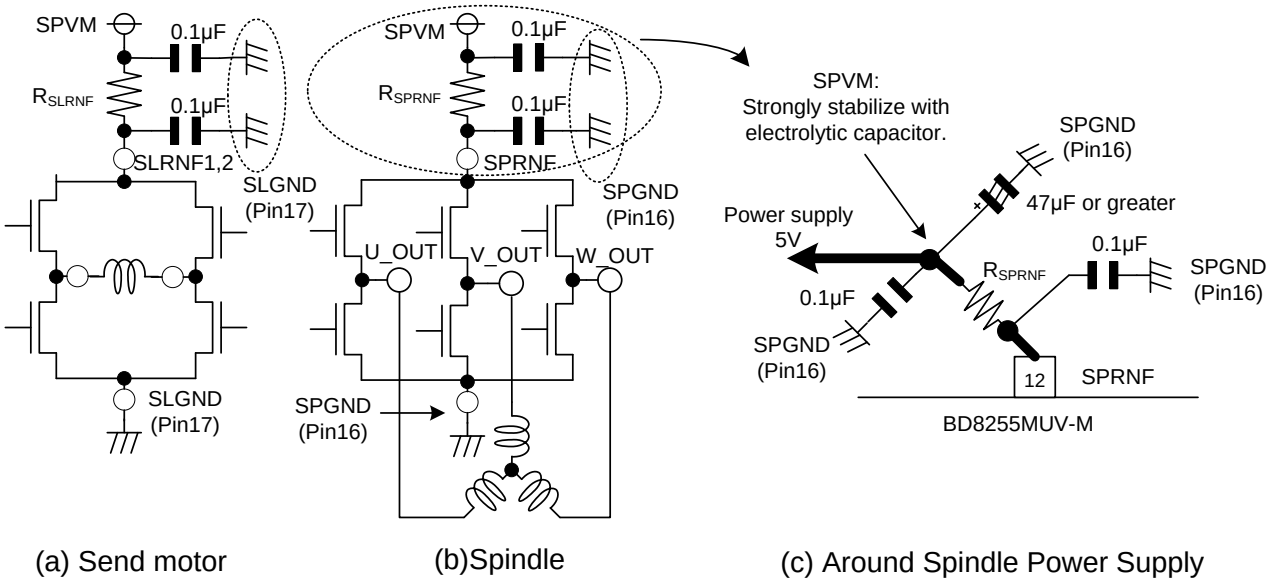

Figure 26. Position of Ceramic Capacitors

© 2013 ROHM Co., Ltd. All rights reserved.

(3) If you could not improve the situation by (1) and (2), another way is to insert a LC filter in the power line or the ground line.

Example:

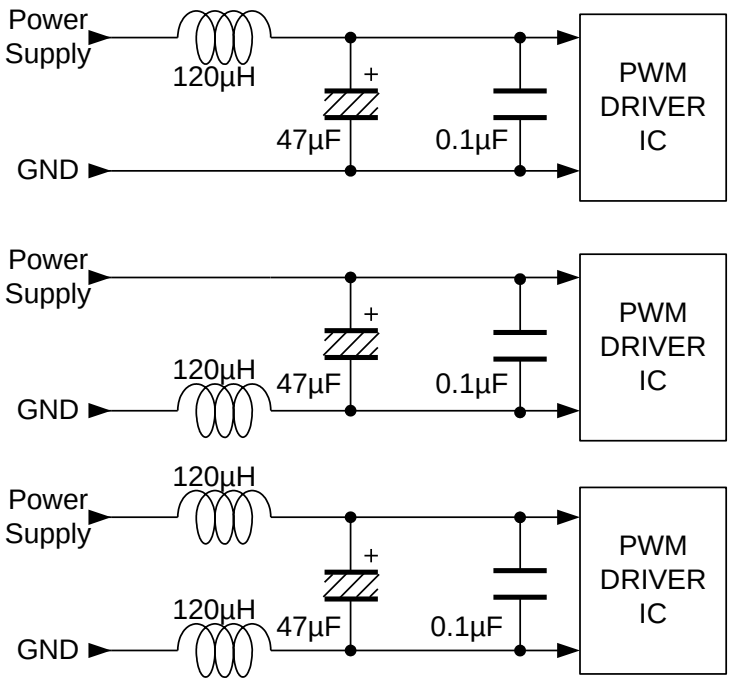

Figure 27. LC Filter Diagram

(4) Or you can also add a capacitor of around 2200 pF between each output and the ground. In this case, ensure that the GND wiring should not have any common impedance with other signals.

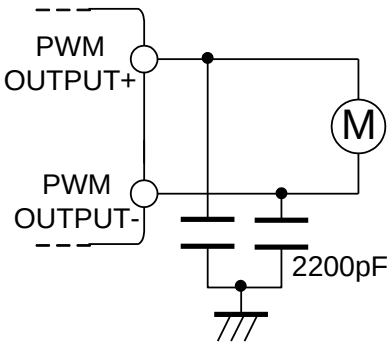

Figure 28. Snubber Circuit

© 2013 ROHM Co., Ltd. All rights reserved.

- Countermeasures against B - See Figure 29. -

(1) Ensure certain distance between RF signal line and PWM-driven output line. If they must be located inevitably too close, shield the RF signal line with GND except the stable GND.
(2) Like in (1), flexible cable to the pickup should be shielded with GND in order to separate noise between the signal line and the actuator drive output line.
(3) Connect the motor system and the actuator system to separate flexible cables.
(4) As FG pulse is generated from hall signal, provide a shield with stable GND or other wire with low impedance between the PWM output and the hall signal so that noise is not radiated from the flexible cable and the board pattern.

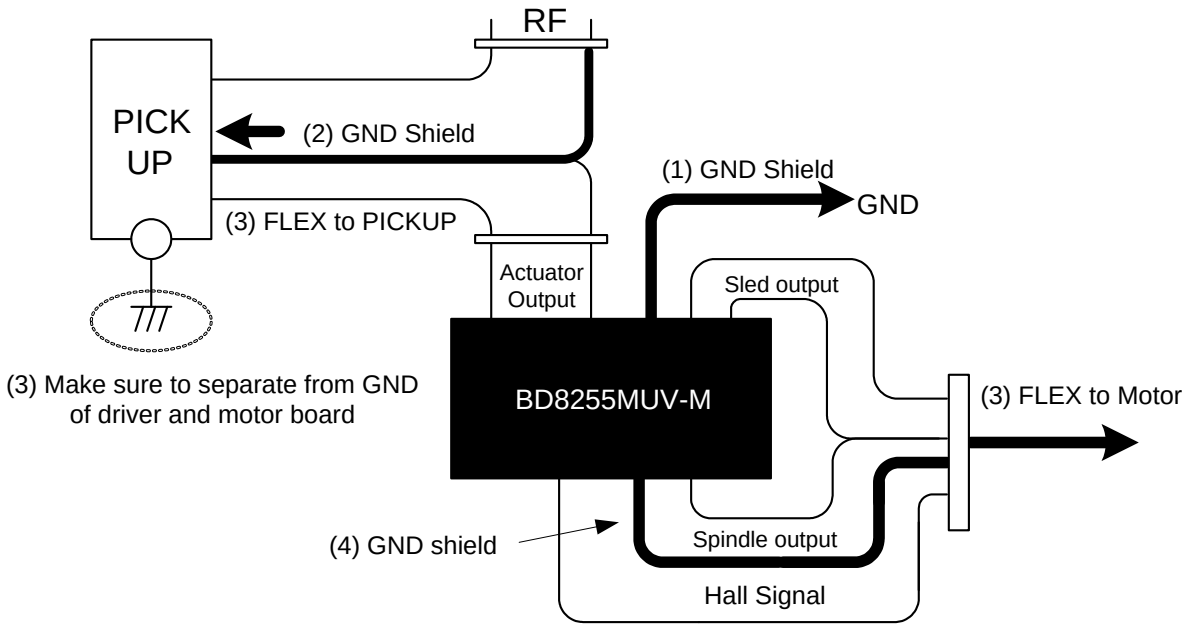

Figure 29. RF Noise Suppression

© 2013 ROHM Co., Ltd. All rights reserved.

Power Supply and Ground *(○) is pin.

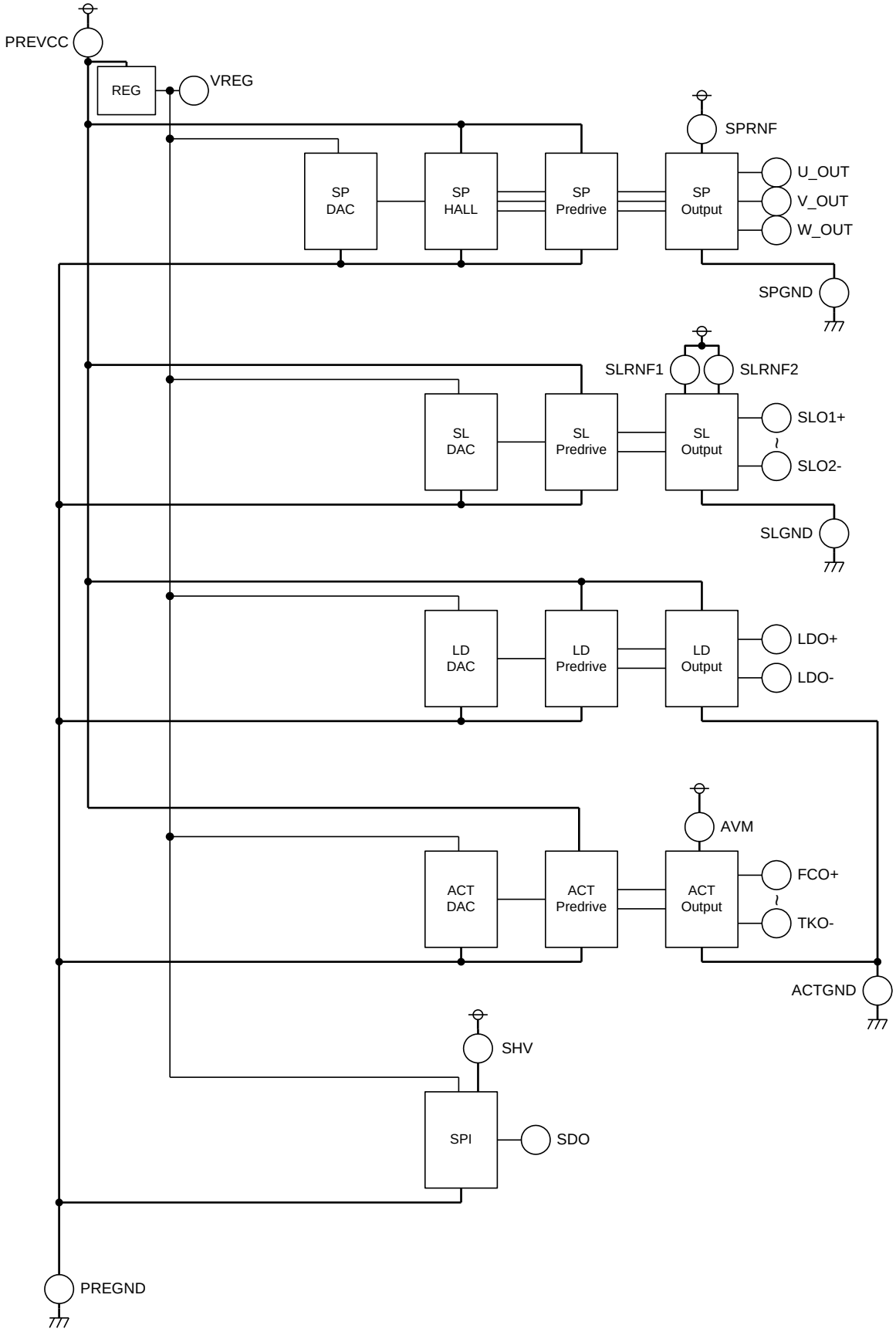

Figure 30. Power Supply and Ground

© 2013 ROHM Co., Ltd. All rights reserved.

Application Example

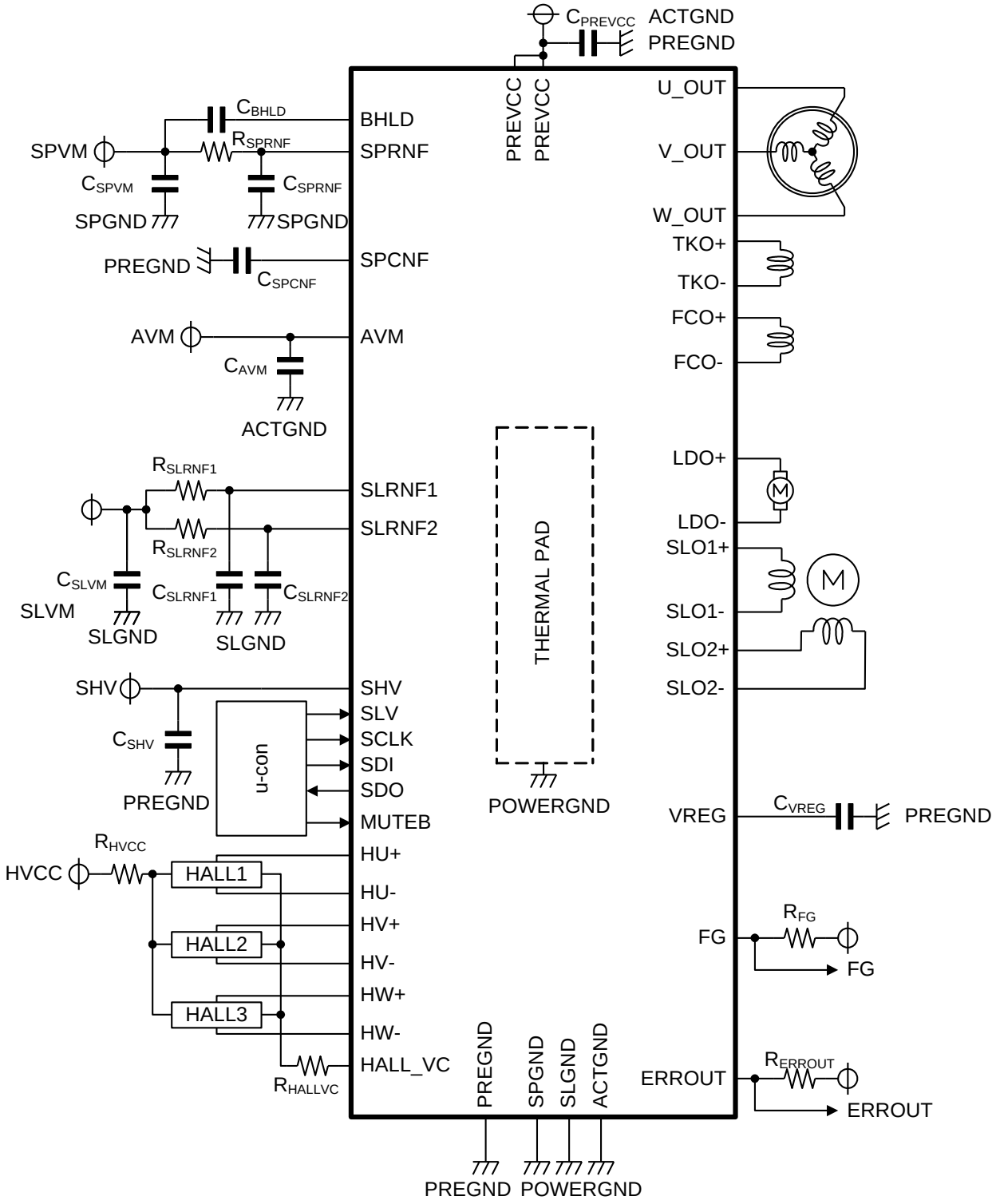

Figure 31. Application Example

© 2013 ROHM Co., Ltd. All rights reserved.

▼Recommended values

Component name	Component value	Product name	Manufacturer
C_{PREVCC}	0.1μF	GCM188R11H Series	murata
	47μF	UCD1E470MCL	Nichicon
C_{BHLD}	470pF	GCM188R11H Series	murata
C_{SPVM}	0.1μF	GCM188R11H Series	murata
	47μF	UCD1E470MCL	Nichicon
R_{SPRNF}	0.33Ω	MCR100 Series	Rohm
C_{SPRNF}	0.1μF	GCM188R11H Series	murata
C_{SPCNF}	0.01μF	GCM188R11H Series	murata
C_{AVM}	0.1μF	GCM188R11H Series	murata
	47μF	UCD1E470MCL	Nichicon
C_{SLVM}	0.1μF	GCM188R11H Series	murata
	47μF	UCD1E470MCL	Nichicon
R_{SLRNF1}	0.56Ω	MCR100 Series	Rohm
R_{SLRNF2}	0.56Ω	MCR100 Series	Rohm
C_{SLRNF1}	0.1μF	GCM188R11H Series	murata
C_{SLRNF2}	0.1μF	GCM188R11H Series	murata
C_{SHV}	0.1μF	GCM188R11H Series	murata
R_{HVCC}	100Ω	MCR03 Series	Rohm
R_{HALLVC}	100Ω	MCR03 Series	Rohm
C_{VREG}	0.01μF	GCM188R11H Series	murata
R_{FG}	10kΩ	MCR03 Series	Rohm
R_{ERROUT}	33kΩ	MCR03 Series	Rohm

© 2013 ROHM Co., Ltd. All rights reserved.

Power Dissipation

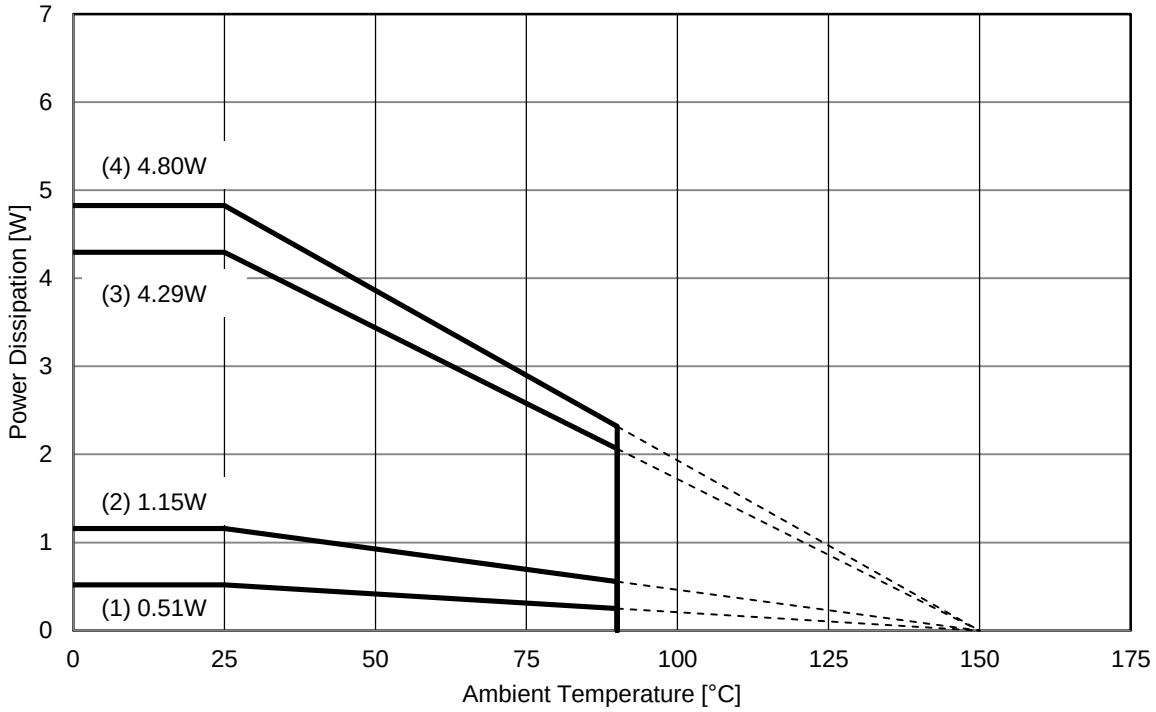

Figure 32. Power dissipation

<Condition>

・Power dissipation calculated when mounted on 74.2mm X 74.2mm X 1.6mm glass epoxy substrate 1-layer platform. (Power dissipation changes with the copper foil density of the board.)

・The board and the back exposure heat radiation board are connected through solder.

Board(1) : no board
Board(2) : 1-layer board (Board copper foil area is 34.09mm^2)
Board(3) : 4-layer board (Board copper foil area of 1st & 4th layer is 34.09mm^2, 2nd & 3rd layer is 5505mm^2)
Board(4) : 4-layer board (Board copper foil area of each layer is 5505mm^2)

Board(1) : θja = 240.4 °C/W
Board(2) : θja = 107.8 °C/W
Board(3) : θja = 29.1 °C/W
Board(4) : θja = 25.9 °C/W

© 2013 ROHM Co., Ltd. All rights reserved.

Operational Notes

1. **Reverse Connection of Power Supply**
   Connecting the power supply in reverse polarity can damage the IC. Take precautions against reverse polarity when connecting the power supply, such as mounting an external diode between the power supply and the IC's power supply pins.

2. **Power Supply Lines**
   Design the PCB layout pattern to provide low impedance supply lines. Separate the ground and supply lines of the digital and analog blocks to prevent noise in the ground and supply lines of the digital block from affecting the analog block. Furthermore, connect a capacitor to ground at all power supply pins. Consider the effect of temperature and aging on the capacitance value when using electrolytic capacitors.

3. **Ground Voltage**
   Ensure that no pins are at a voltage below that of the ground pin at any time, even during transient condition. However, pins that drive inductive loads (e.g. motor driver outputs, DC-DC converter outputs) may inevitably go below ground due to back EMF or electromotive force. In such cases, the user should make sure that such voltages going below ground will not cause the IC and the system to malfunction by examining carefully all relevant factors and conditions such as motor characteristics, supply voltage, operating frequency and PCB wiring to name a few.

4. **Ground Wiring Pattern**
   When using both small-signal and large-current ground traces, the two ground traces should be routed separately but connected to a single ground at the reference point of the application board to avoid fluctuations in the small-signal ground caused by large currents. Also ensure that the ground traces of external components do not cause variations on the ground voltage. The ground lines must be as short and thick as possible to reduce line impedance.

5. **Thermal Consideration**
   Should by any chance the power dissipation rating be exceeded the rise in temperature of the chip may result in deterioration of the properties of the chip. The absolute maximum rating of the Pd stated in this specification is when the IC is mounted on a 74.2mm x 74.2mm x 1.6mm glass epoxy board. In case of exceeding this absolute maximum rating, increase the board size and copper area to prevent exceeding the Pd rating.

6. **Recommended Operating Conditions**
   These conditions represent a range within which the expected characteristics of the IC can be approximately obtained. The electrical characteristics are guaranteed under the conditions of each parameter.

7. **Inrush Current**
   When power is first supplied to the IC, it is possible that the internal logic may be unstable and inrush current may flow instantaneously due to the internal powering sequence and delays, especially if the IC has more than one power supply. Therefore, give special consideration to power coupling capacitance, power wiring, width of ground wiring, and routing of connections.

8. **Operation Under Strong Electromagnetic Field**
   Operating the IC in the presence of a strong electromagnetic field may cause the IC to malfunction.

9. **Testing on Application Boards**
   When testing the IC on an application board, connecting a capacitor directly to a low-impedance output pin may subject the IC to stress. Always discharge capacitors completely after each process or step. The IC's power supply should always be turned off completely before connecting or removing it from the test setup during the inspection process. To prevent damage from static discharge, ground the IC during assembly and use similar precautions during transport and storage.

10. **Inter-pin Short and Mounting Errors**
    Ensure that the direction and position are correct when mounting the IC on the PCB. Incorrect mounting may result in damaging the IC. Avoid nearby pins being shorted to each other especially to ground, power supply and output pin. Inter-pin shorts could be due to many reasons such as metal particles, water droplets (in very humid environment) and unintentional solder bridge deposited in between pins during assembly to name a few.

© 2013 ROHM Co., Ltd. All rights reserved.

Operational Notes – continued

11. Unused Input Pins

Input pins of an IC are often connected to the gate of a MOS transistor. The gate has extremely high impedance and extremely low capacitance. If left unconnected, the electric field from the outside can easily charge it. The small charge acquired in this way is enough to produce a significant effect on the conduction through the transistor and cause unexpected operation of the IC. So unless otherwise specified, unused input pins should be connected to the power supply or ground line.

12. Regarding the Input Pin of the IC

This monolithic IC contains P+ isolation and P substrate layers between adjacent elements in order to keep them isolated. P-N junctions are formed at the intersection of the P layers with the N layers of other elements, creating a parasitic diode or transistor. For example (refer to figure below):

When GND > Pin A and GND > Pin B, the P-N junction operates as a parasitic diode.
When GND > Pin B, the P-N junction operates as a parasitic transistor.

Parasitic diodes inevitably occur in the structure of the IC. The operation of parasitic diodes can result in mutual interference among circuits, operational faults, or physical damage. Therefore, conditions that cause these diodes to operate, such as applying a voltage lower than the GND voltage to an input pin (and thus to the P substrate) should be avoided.

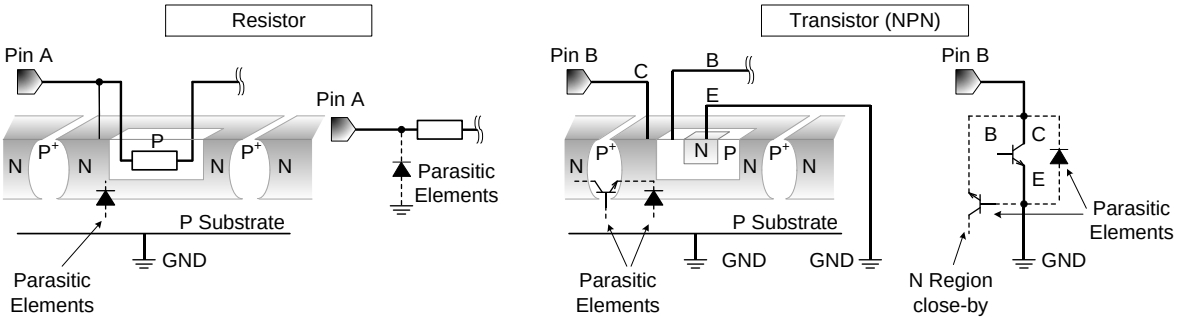

Figure 33. Example of monolithic IC structure

13. Ceramic Capacitor

When using a ceramic capacitor, determine the dielectric constant considering the change of capacitance with temperature and the decrease in nominal capacitance due to DC bias and others.

14. Area of Safe Operation (ASO)

Operate the IC such that the output voltage, output current, and power dissipation are all within the Area of Safe Operation (ASO).

15. Thermal Shutdown Circuit(TSD)

This IC has a built-in thermal shutdown circuit that prevents heat damage to the IC. Normal operation should always be within the IC's power dissipation rating. If however the rating is exceeded for a continued period, the junction temperature (Tj) will rise which will activate the TSD circuit that will turn OFF all output pins. When the Tj falls below the TSD threshold, the circuits are automatically restored to normal operation.
Note that the TSD circuit operates in a situation that exceeds the absolute maximum ratings and therefore, under no circumstances, should the TSD circuit be used in a set design or for any purpose other than protecting the IC from heat damage.

© 2013 ROHM Co., Ltd. All rights reserved.

Ordering Information

B D 8 2 5 5 M U V	-	M E 2
Part Number	Package MUV : VQFN48SV7070	Packaging and forming specification M: High reliability E2: Embossed tape and reel (VQFN48SV7070)

Marking Diagram

VQFN48SV7070 (TOP VIEW)

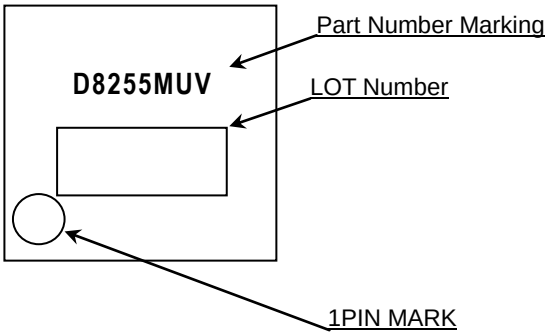

© 2013 ROHM Co., Ltd. All rights reserved.

Physical Dimension, Tape and Reel Information

Package Name	VQFN48SV7070

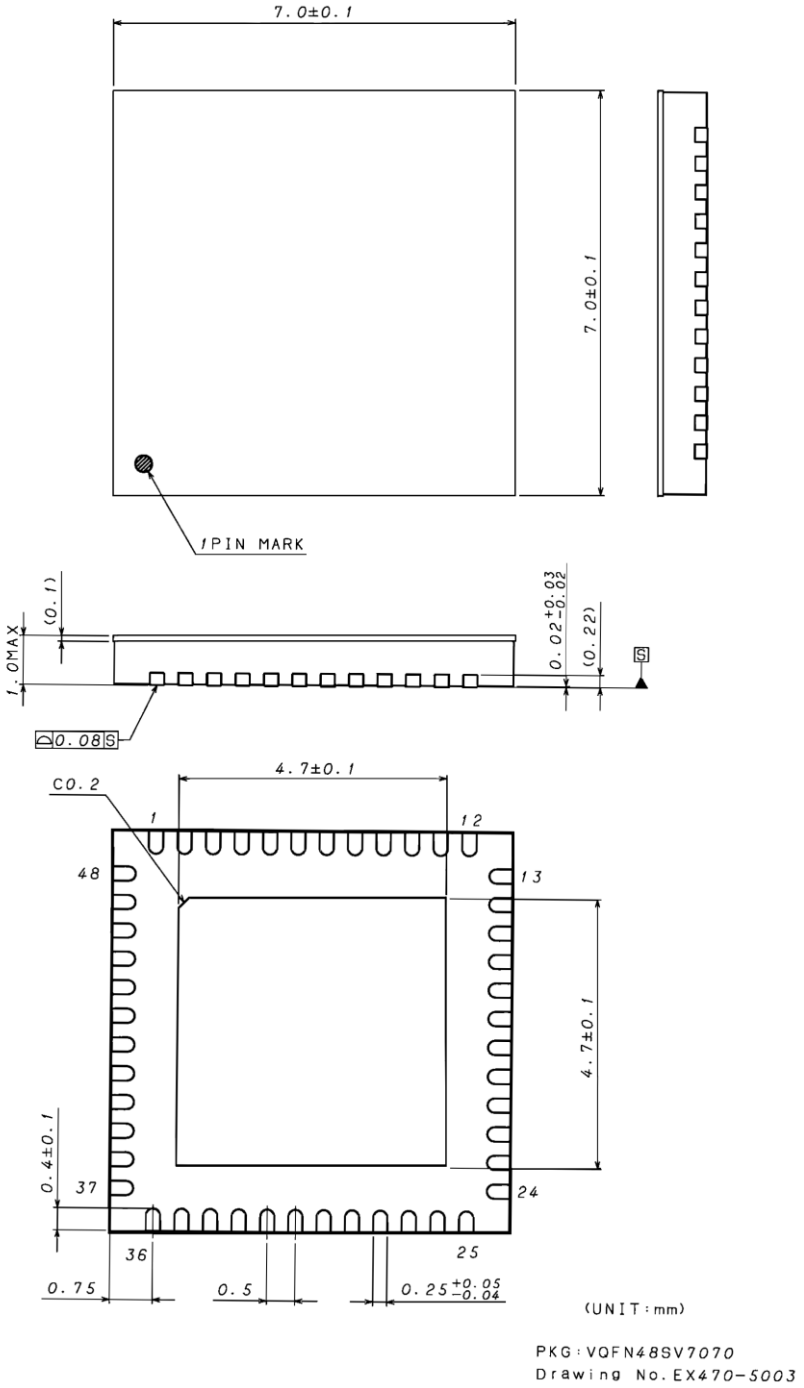

<Tape and Reel information>

Tape	Embossed carrier tape
Quantity	1500pcs
Direction of feed	E2 (The direction is the 1pin of product is at the upper left when you hold reel on the left hand and you pull out the tape on the right hand)

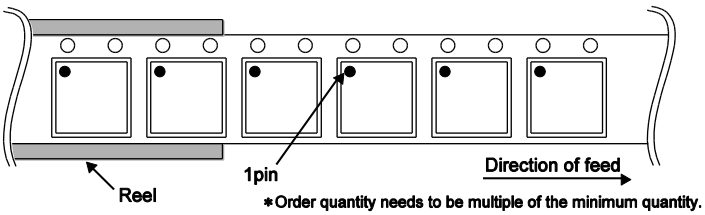

∗Order quantity needs to be multiple of the minimum quantity.

© 2013 ROHM Co., Ltd. All rights reserved.

Revision History

Date	Revision	Changes
30.Oct.2013	001	New release
5.Dec.2013	002	P.4 PREVCC Drop Mute Voltage MAX 4.0V P.5 PREVCC Drop Mute Voltage MAX 4.1V Ta=25°C→Ta=-40°C to 90°C
18.Apr.2014	003	P.1 Delete Power Supply Voltage Range from Key Specifications P.28 Add the sentence at 3.UVLO
4.Apr.2016	004	P.19 Add *Condition:R_{SLRNF}=0.56Ω P.20 Add *Condition:R_{SPRNF}=0.33Ω P.24 Change : Figure 21. C_{SPRNF}⇒C_{SPCNF} P.25 5.Update : Hall input voltage range from 1.0 ~ 3.8V to 1.5 ~ 3.8V P.38 Update : Figure about Pin28, 29, 34, 31

© 2013 ROHM Co., Ltd. All rights reserved.

Notice

Precaution on using ROHM Products

1. If you intend to use our Products in devices requiring extremely high reliability (such as medical equipment (Note 1), aircraft/spacecraft, nuclear power controllers, etc.) and whose malfunction or failure may cause loss of human life, bodily injury or serious damage to property ("Specific Applications"), please consult with the ROHM sales representative in advance. Unless otherwise agreed in writing by ROHM in advance, ROHM shall not be in any way responsible or liable for any damages, expenses or losses incurred by you or third parties arising from the use of any ROHM's Products for Specific Applications.

(Note1) Medical Equipment Classification of the Specific Applications

JAPAN	USA	EU	CHINA
CLASSⅢ	CLASSⅢ	CLASSⅡb	CLASSⅢ
CLASSⅣ		CLASSⅢ	

2. ROHM designs and manufactures its Products subject to strict quality control system. However, semiconductor products can fail or malfunction at a certain rate. Please be sure to implement, at your own responsibilities, adequate safety measures including but not limited to fail-safe design against the physical injury, damage to any property, which a failure or malfunction of our Products may cause. The following are examples of safety measures:
   [a] Installation of protection circuits or other protective devices to improve system safety
   [b] Installation of redundant circuits to reduce the impact of single or multiple circuit failure

3. Our Products are not designed under any special or extraordinary environments or conditions, as exemplified below. Accordingly, ROHM shall not be in any way responsible or liable for any damages, expenses or losses arising from the use of any ROHM's Products under any special or extraordinary environments or conditions. If you intend to use our Products under any special or extraordinary environments or conditions (as exemplified below), your independent verification and confirmation of product performance, reliability, etc, prior to use, must be necessary:
   [a] Use of our Products in any types of liquid, including water, oils, chemicals, and organic solvents
   [b] Use of our Products outdoors or in places where the Products are exposed to direct sunlight or dust
   [c] Use of our Products in places where the Products are exposed to sea wind or corrosive gases, including Cl_2, H_2S, NH_3, SO_2, and NO_2
   [d] Use of our Products in places where the Products are exposed to static electricity or electromagnetic waves
   [e] Use of our Products in proximity to heat-producing components, plastic cords, or other flammable items
   [f] Sealing or coating our Products with resin or other coating materials
   [g] Use of our Products without cleaning residue of flux (even if you use no-clean type fluxes, cleaning residue of flux is recommended); or Washing our Products by using water or water-soluble cleaning agents for cleaning residue after soldering
   [h] Use of the Products in places subject to dew condensation

4. The Products are not subject to radiation-proof design.

5. Please verify and confirm characteristics of the final or mounted products in using the Products.

6. In particular, if a transient load (a large amount of load applied in a short period of time, such as pulse. is applied, confirmation of performance characteristics after on-board mounting is strongly recommended. Avoid applying power exceeding normal rated power; exceeding the power rating under steady-state loading condition may negatively affect product performance and reliability.

7. De-rate Power Dissipation depending on ambient temperature. When used in sealed area, confirm that it is the use in the range that does not exceed the maximum junction temperature.

8. Confirm that operation temperature is within the specified range described in the product specification.

9. ROHM shall not be in any way responsible or liable for failure induced under deviant condition from what is defined in this document.

Precaution for Mounting / Circuit board design

1. When a highly active halogenous (chlorine, bromine, etc.) flux is used, the residue of flux may negatively affect product performance and reliability.

2. In principle, the reflow soldering method must be used on a surface-mount products, the flow soldering method must be used on a through hole mount products. If the flow soldering method is preferred on a surface-mount products, please consult with the ROHM representative in advance.

For details, please refer to ROHM Mounting specification

© 2015 ROHM Co., Ltd. All rights reserved.

Precautions Regarding Application Examples and External Circuits

1. If change is made to the constant of an external circuit, please allow a sufficient margin considering variations of the characteristics of the Products and external components, including transient characteristics, as well as static characteristics.

2. You agree that application notes, reference designs, and associated data and information contained in this document are presented only as guidance for Products use. Therefore, in case you use such information, you are solely responsible for it and you must exercise your own independent verification and judgment in the use of such information contained in this document. ROHM shall not be in any way responsible or liable for any damages, expenses or losses incurred by you or third parties arising from the use of such information.

Precaution for Electrostatic

This Product is electrostatic sensitive product, which may be damaged due to electrostatic discharge. Please take proper caution in your manufacturing process and storage so that voltage exceeding the Products maximum rating will not be applied to Products. Please take special care under dry condition (e.g. Grounding of human body / equipment / solder iron, isolation from charged objects, setting of Ionizer, friction prevention and temperature / humidity control).

Precaution for Storage / Transportation

1. Product performance and soldered connections may deteriorate if the Products are stored in the places where:
   [a] the Products are exposed to sea winds or corrosive gases, including Cl2, H2S, NH3, SO2, and NO2
   [b] the temperature or humidity exceeds those recommended by ROHM
   [c] the Products are exposed to direct sunshine or condensation
   [d] the Products are exposed to high Electrostatic

2. Even under ROHM recommended storage condition, solderability of products out of recommended storage time period may be degraded. It is strongly recommended to confirm solderability before using Products of which storage time is exceeding the recommended storage time period.

3. Store / transport cartons in the correct direction, which is indicated on a carton with a symbol. Otherwise bent leads may occur due to excessive stress applied when dropping of a carton.

4. Use Products within the specified time after opening a humidity barrier bag. Baking is required before using Products of which storage time is exceeding the recommended storage time period.

Precaution for Product Label

A two-dimensional barcode printed on ROHM Products label is for ROHM's internal use only.

Precaution for Disposition

When disposing Products please dispose them properly using an authorized industry waste company.

Precaution for Foreign Exchange and Foreign Trade act

Since concerned goods might be fallen under listed items of export control prescribed by Foreign exchange and Foreign trade act, please consult with ROHM in case of export.

Precaution Regarding Intellectual Property Rights

1. All information and data including but not limited to application example contained in this document is for reference only. ROHM does not warrant that foregoing information or data will not infringe any intellectual property rights or any other rights of any third party regarding such information or data.

2. ROHM shall not have any obligations where the claims, actions or demands arising from the combination of the Products with other articles such as components, circuits, systems or external equipment (including software).

3. No license, expressly or implied, is granted hereby under any intellectual property rights or other rights of ROHM or any third parties with respect to the Products or the information contained in this document. Provided, however, that ROHM will not assert its intellectual property rights or other rights against you or your customers to the extent necessary to manufacture or sell products containing the Products, subject to the terms and conditions herein.

Other Precaution

1. This document may not be reprinted or reproduced, in whole or in part, without prior written consent of ROHM.

2. The Products may not be disassembled, converted, modified, reproduced or otherwise changed without prior written consent of ROHM.

3. In no event shall you use in any way whatsoever the Products and the related technical information contained in the Products or this document for any military purposes, including but not limited to, the development of mass-destruction weapons.

4. The proper names of companies or products described in this document are trademarks or registered trademarks of ROHM, its affiliated companies or third parties.

© 2015 ROHM Co., Ltd. All rights reserved.

General Precaution

1. Before you use our Products, you are requested to carefully read this document and fully understand its contents. ROHM shall not be in any way responsible or liable for failure, malfunction or accident arising from the use of any ROHM's Products against warning, caution or note contained in this document.

2. All information contained in this document is current as of the issuing date and subject to change without any prior notice. Before purchasing or using ROHM's Products, please confirm the latest information with a ROHM sales representative.

3. The information contained in this document is provided on an "as is" basis and ROHM does not warrant that all information contained in this document is accurate and/or error-free. ROHM shall not be in any way responsible or liable for any damages, expenses or losses incurred by you or third parties resulting from inaccuracy or errors of or concerning such information.

© 2015 ROHM Co., Ltd. All rights reserved.

Компания «ЭлектроПласт» предлагает заключение долгосрочных отношений при поставках импортных электронных компонентов на взаимовыгодных условиях!

Наши преимущества:

- Оперативные поставки широкого спектра электронных компонентов отечественного и импортного производства напрямую от производителей и с крупнейших мировых складов;
- Поставка более 17-ти миллионов наименований электронных компонентов;
- Поставка сложных, дефицитных, либо снятых с производства позиций;
- Оперативные сроки поставки под заказ (от 5 рабочих дней);
- Экспресс доставка в любую точку России;
- Техническая поддержка проекта, помощь в подборе аналогов, поставка прототипов;
- Система менеджмента качества сертифицирована по Международному стандарту ISO 9001;
- Лицензия ФСБ на осуществление работ с использованием сведений, составляющих государственную тайну;
- Поставка специализированных компонентов (Xilinx, Altera, Analog Devices, Intersil, Interpoint, Microsemi, Aeroflex, Peregrine, Syfer, Eurofarad, Texas Instrument, Miteq, Cobham, E2V, MA-COM, Hittite, Mini-Circuits,General Dynamics и др.);

Помимо этого, одним из направлений компании «ЭлектроПласт» является направление «Источники питания». Мы предлагаем Вам помощь Конструкторского отдела:

- Подбор оптимального решения, техническое обоснование при выборе компонента;
- Подбор аналогов;
- Консультации по применению компонента;
- Поставка образцов и прототипов;
- Техническая поддержка проекта;
- Защита от снятия компонента с производства.

Как с нами связаться

Телефон: 8 (812) 309 58 32 (многоканальный)
Факс: 8 (812) 320-02-42
Электронная почта: org@eplast1.ru
Адрес: 198099, г. Санкт-Петербург, ул. Калинина, дом 2, корпус 4, литера А.