SmartACFL™ Modem

V.90/K56flex™/V.34/V.32bis Modem Device Sets with Microcontroller (L2702), Modem Data Pump (P9373), SmartDAA™ (20463), and Optional Voice Codec (20437) for Low Power Applications

The Conexant™ SmartACFL V.90/K56flex Modem Device Set with SmartDAA technology supports analog data up to 56 Kbps, analog fax to 14.4 Kbps, telephone answering machine (TAM), V.80 synchronous access mode, on-board DSVD, voice/speakerphone (optional), and cellular/GSM operation. Serial, parallel, or PC Card host interface operation is supported depending on the selected model (Table 1).

The modem supports ITU-T V.90/K56flex™, V.34 and V.32bis data modulations and is designed to operate with dial-up telephone lines in the U.S. and worldwide. PC Card and parallel host interface models also support analog cellular direct connect and GSM direct connect. Low profile, small TQFP packages and low voltage operation with low power consumption make this device set ideal for laptop, notebook, and palmtop applications using the parallel host or serial DTE interface with the MCU, or the PC Card interface with the MCUP.

The SmartACFL device set consists of a Microcontroller (MCU or MCUP) in a 128-pin TQFP, a Modem Data Pump (MDP) in a 100-pin TQFP, and a Line Side Device (LSD) (SmartDAA device) in a 32-pin TQFP. The optional Voice Codec (VC), in a 32-pin TQFP, supports voice/full-duplex speakerphone (FDSP) operation with interfaces to a microphone and speaker and to a telephone handset/headset. Figure 1 identifies the major hardware signal interfaces. The MCUP supports two peripheral channels, one channel for the modem and a second channel for an optional user-defined function (Function 2).

Conexant's SmartDAA technology (patent pending) eliminates the need for a costly line transformer, relays, and opto-isolators typically used in discrete DAA (Data Access Arrangement) implementations. The SmartDAA architecture also simplifies product implementation by eliminating the need for country-specific components enabling worldwide homologation of a single modem board design and a single bill of materials (BOM).

The SmartDAA system-powered DAA operates reliably without drawing power from the line, unlike line-powered DAAs that operate poorly when line current is insufficient due to long lines or poor line conditions. Enhanced features, such as monitoring of local extension status without going off-hook, are also supported.

Incorporating Conexant's proprietary Digital Isolation Barrier (DIB) design (patent pending) and other innovative DAA features, the SmartDAA architecture simplifies application design, minimizes layout area, and reduces component cost.

Features

- V.90 data/V.17 fax modem
- SmartDAA technology
  - System side powered DAA operates under poor line current supply conditions
  - Wake-on-ring
  - Ring detection
  - Line polarity reversal detection
  - Line current loss detection
  - Pulse dialing
  - Call waiting detection
  - Digital PBX line protection
  - Meets world-wide DC VI Masks requirements
  - Caller ID detection
- Data/Fax/Voice call discrimination
- Hardware-based modem controller
- Hardware-based digital signal processor (DSP)
- Voice/full-duplex speakerphone mode (S models)
- V.70 DSVD using optional RCDSVD SCP (S models)
- World-wide operation
- Industry standard communication commands
- Selectable parallel/serial interface with speeds up to 230.4 kbps
  - Parallel 16550A UART-compatible interface
  - Serial ITU-T V.24 (EIA/TIA-232-E)
- V.80 synchronous access mode
- Direct mode (serial interface)
- Synchronous data mode (serial interface)
- V.22 bis fast connect
- Analog cellular direct connect
- GSM direct connect
- Sleep mode
- Thin packages support low profile designs
- +3.3V operation with +5V tolerant digital inputs

Table 1. SmartACFL Modem Models and Functions

Model/Order/Part Numbers						Supported Functions			
Marketing Name	Device Set Order No.	MCU [128-Pin TQFP] Part No.	MDP [100-Pin TQFP] Part No.	LSD [32-Pin TQFP] Part No.	Optional Voice Codec (VC) [32-Pin TQFP] Part No.	V.90/K56flex Data	V.34 Data	V.32 bis Data, V.17 Fax, Fax Cl 1, Fax Cl 2, TAM, W-W, V.80	Voice/ FDSP
SmartACFL/56S-PCC	DS56-L492-001	L2702-12	P9373-11	20463-11	20437-11	Y	Y	Y	Y
SmartACFL/56-PCC	DS56-L492-011	L2702-12	P9373-11	20463-11	—	Y	Y	Y	—
SmartACFL/56S	DS56-L492-021	L2702-15	P9373-11	20463-11	20437-11	Y	Y	Y	Y
SmartACFL/56	DS56-L492-031	L2702-15	P9373-11	20463-11	—	Y	Y	Y	—

Notes:

1. Model options:

S	Voice and speakerphone
PCC	PC Card host interface (serial DTE/parallel host if not PCC)
56	56 kbps max. rate per V.90
33	33.6 kbps max. rate per V.34
14	14.4 kbps max. rate per V.32bis

2. Supported functions (Y = Supported; — = Not supported):

TAM	Telephone answering machine support (handset support requires S model)
Fax Cl 1 and Cl 2	Fax Class 1 and Fax Class 2 support
FDSP	Full-duplex speakerphone

Revision History

Revision	Date	Comments
A	12/21/99	Initial public release of document

Copyright © Conexant Systems, Inc., 1999. All Rights Reserved.

Information in this document is provided in connection with Conexant Systems, Inc. ("Conexant") products. These materials are provided by Conexant as a service to its customers and may be used for informational purposes only. Conexant assumes no responsibility for errors or omissions in these materials. Conexant may make changes to specifications and product descriptions at any time, without notice. Conexant makes no commitment to update the information contained herein. Conexant shall have no responsibility whatsoever for conflicts or incompatibilities arising from future changes to its specifications and product descriptions.

No license, express or implied, by estoppel or otherwise, to any intellectual property rights is granted by this document. Except as provided in Conexant's Terms and Conditions of Sale for such products, Conexant assumes no liability whatsoever.

THESE MATERIALS ARE PROVIDED "AS IS" WITHOUT WARRANTY OF ANY KIND, EITHER EXPRESS OR IMPLIED, RELATING TO SALE AND/OR USE OF CONEXANT PRODUCTS INCLUDING LIABILITY OR WARRANTIES RELATING TO FITNESS FOR A PARTICULAR PURPOSE, MERCHANTABILITY, OR INFRINGEMENT OF ANY PATENT, COPYRIGHT OR OTHER INTELLECTUAL PROPERTY RIGHT. Conexant further does not warrant the accuracy or completeness of the information, text, graphics or other items contained within these materials. Conexant shall not be liable for any special, indirect, incidental, or consequential damages, including without limitation, lost revenues or lost profits, which may result from the use of these materials.

Conexant products are not intended for use in medical, life saving or life sustaining applications. Conexant customers using or selling Conexant products for use in such applications do so at their own risk and agree to fully indemnify Conexant for any damages resulting from such improper use or sale.

The following are trademarks of Conexant Systems, Inc.: Conexant, the Conexant C symbol, "What's Next in Communications Technologies", SmartDAA, SmartHSF, and SmartACFL. Product names or services listed in this publication are for identification purposes only, and may be trademarks of third parties. Third-party brands and names are the property of their respective owners.

Reader Response: Conexant strives to produce quality documentation and welcomes your feedback. Please send comments and suggestions to conexant.tech.pubs@conexant.com. For technical questions, contact your local Conexant sales office or field applications engineer.

Introduction (continued)

The optional Voice Codec (VC) supports voice/full-duplex speakerphone (FDSP) operation with interfaces to a microphone and speaker and to a telephone handset/headset. The optional RCDSVD Speech Codec Processor (SCP) supports DSVD.

The modem operates by executing firmware from external 1 Mbit (128k X 8) RAM and 2 Mbit (256k X 8) ROM/Flash ROM. The 33S and 14S models can alternatively use external 1 Mbit or 2 Mbit ROM/Flash ROM and the MCU's internal 32K X 8 RAM. For GSM support the ROM size is doubled.

Accelerator kits and reference designs are available in electronic form to minimize application design time and costs. The design package includes schematics, bill of materials (BOM), board layout files in Gerber format, and complete documentation. The design is pretested to pass FCC Part 15, Part 68, and CTR 21 for immediate manufacturing.

Applications

- PC Cards
- Embedded systems
- Serial box modems
- Set top boxes
- Point of sales terminals
- Remote monitoring and data collection systems

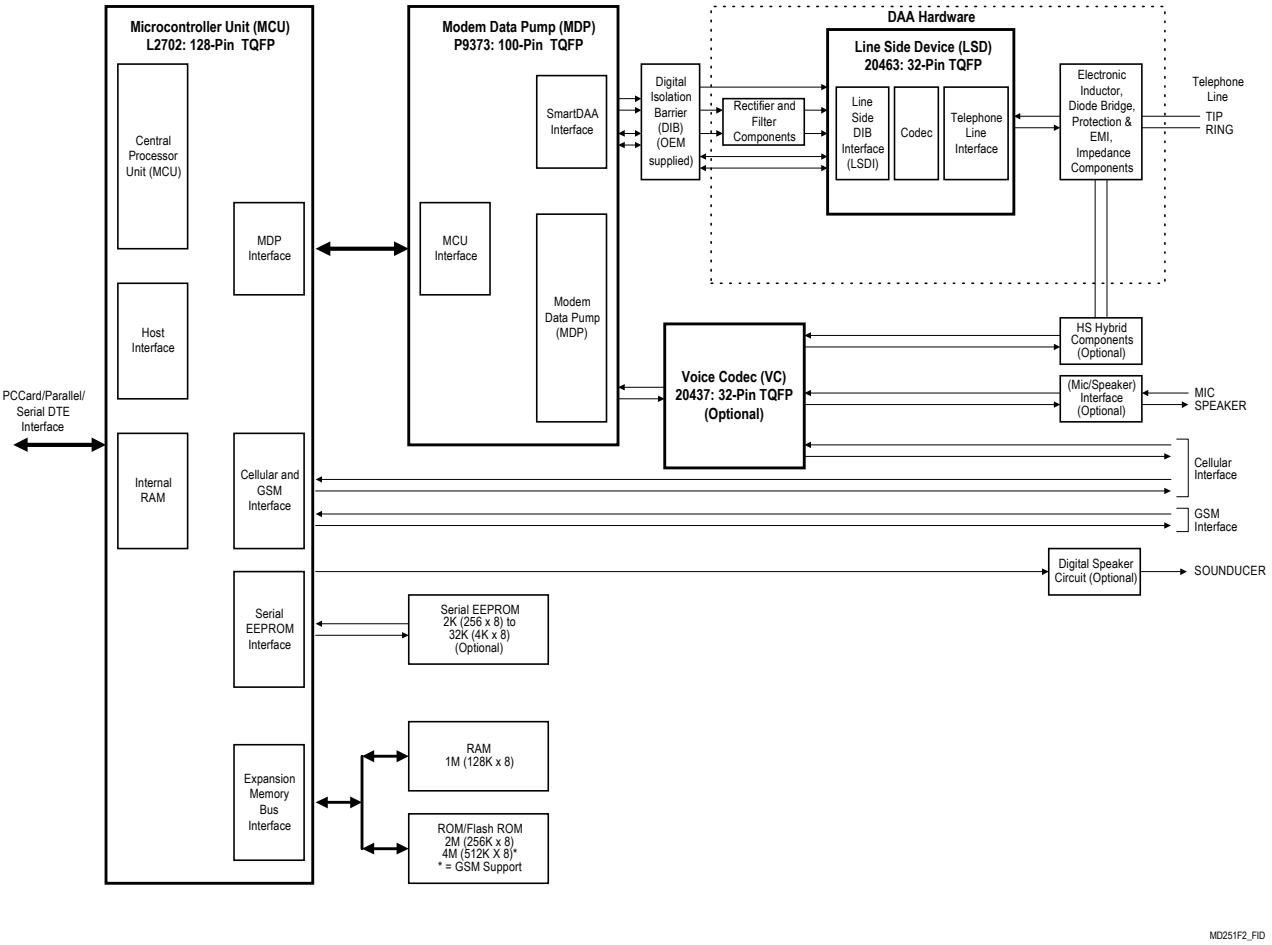

Figure 1. SmartACFL Modem Major Interfaces

Detailed Features

General Modem Features

- Downloadable Architecture
  - Downloadable MCU firmware from the host/DTE
  - Downloadable MDP code modules from the MCU, transparent to the host
- V.90 data modem with receive rates up to 56k bps and send rates up to V.34 rates
  - ITU-T V.90, K56flex, V.34 (33.6 kbps), V.32 bis, V.32, V.22 bis, V.22, V.23, and V.21; Bell 212A and 103
  - V.42 LAPM and MNP 2-4 error correction
  - V.42 bis and MNP 5 data compression
  - MNP 10EC™ enhanced cellular performance
  - V.250 (ex V.25 ter) and V.251 (ex V.25 ter Annex A) commands
- V.22 bis fast connect
- Analog cellular direct connect
- GSM direct connect
- V.17 fax modem with send and receive rates up to 14.4 kbps
  - ITU-T V.17, V.29, V.27 ter, and V.21 ch. 2
  - EIA/TIA 578 Class 1 and T.30 Class 1.0 commands
- V.80 synchronous access mode supports host-controlled communication protocols with H.324 interface support
- Data/Fax/Voice call discrimination
- Hardware-based modem controller
- Worldwide operation
  - US/Japan/Canada/TBR21 and other countries
  - Caller ID and distinctive ring detection
  - Call progress, blacklisting
- Telephony/TAM
  - V.253 commands
  - 8-bit μ-Law/A-Law coding (G.711)
  - 8-bit/16-bit linear coding
  - 8 kHz sample rate
  - Concurrent DTMF, ring, and Caller ID detection
- Full-duplex speakerphone mode (S models)
  - Microphone and speaker interface
  - Telephone handset or headset interface
  - Acoustic and line echo cancellation
  - Microphone gain and muting
  - Speaker volume control and muting
- PC Card interface (MCUP only) supports two functions with programmable I/O and window size
- JTAG Boundary Scan support
- Built-in host/DTE interface with speeds up to 230.4 kbps
  - Parallel 16550A UART-compatible interface (MCU)
  - Serial ITU-T V.24 (EIA/TIA-232-E) (MCU)
  - PC Card (MCUP)
- Flow control and speed buffering
- Automatic format/speed sensing
- Serial sync/async data; parallel async data
- Sleep mode
- Thin packages support low profile designs (1.6 mm max. height)
- MCU (L2702): 128-pin TQFP
- MDP (P9373): 100-pin TQFP
- LSD (20463): 32-pin TQFP
- VC (20437): 32-pin TQFP

Description

General

The SmartACFL device set, comprised of separate microcontroller (MCU), modem data pump (MDP), and line side device (LSD) devices, provides the processing core for a complete modem design. The optional Voice Codec (VC) supports voice/full-duplex speakerphone (FDSP) operation with interfaces to a microphone and speaker and to a telephone handset/headset (S models). The S model can also be ordered with an RCDSVD Speech Codec Processor (SCP) in a 100-pin PQFP to support DSVD.

Modem operation, including dialing, call progress, telephone line interface, telephone handset interface, voice/speakerphone interface, and host interface functions are supported and controlled through the V.250, V.251, and V.253-compatible command set.

The modem hardware connects to the host via a parallel, serial, or PC Card interface. The OEM adds discrete components as required by the modem model and the application to complete the system (Table 1). These components may include a crystal circuit, EEPROM, DIB components, telephone line interface, optional voice/speakerphone interface, and optional cellular/GSM interface.

Parallel interface operation, including cellular and GSM support, is selected by PARIF input high. Serial interface operation is selected by PARIF input low. Cellular operation is selected by LINE/CELL input low. GSM operation is selected by LINE/GSM input low.

Data/Fax Modes

In V.90/K56flex data modem mode, the modem can receive data from a digitally connected central site modem (CSM) at line speeds up to 56 kbps. Asymmetrical data transmission supports sending data up to V.34 rates; this mode can fallback to full-duplex V.34 mode, and to lower rates as dictated by line conditions.

In V.34 data mode, the modem operates at line speeds up to 33.6 kbps. Error correction (V.42/MNP 2-4) and data compression (V.42 bis/MNP 5) maximize data transfer integrity and boost average data throughput up to 230.4 kbps. Non-error-correcting mode is also supported.

Data modem modes perform complete handshake and data rate negotiations. Using V.34 modulation to optimize modem configuration for line conditions, the modem can connect at the highest data rate that the channel can support from 33600 bps down to 2400 bps with automatic fallback. Automode operation in V.34 is provided in accordance with PN3320 and in V.32 bis in accordance with PN2330. All tone and pattern detection functions required by the applicable ITU or Bell standard are supported.

In V.32 bis mode, the modem operates at line speeds up to 14.4 kbps.

In V.22 bis fast connect mode, the modem can connect at 2400 bps with a very short training time, which is very efficient for small data transfers.

In fax modem mode, the modem can operate in 2-wire, half-duplex, synchronous mode and can support Group 3 facsimile send and receive speeds of 14400, 12000, 9600, 7200, 4800, and 2400 bps. Fax data transmission and reception performed by the modem are controlled and monitored through the EIA/TIA-578 Fax Class 1, T.30 Fax Class 1.0, or Fax Class 2 command interface. Full HDLC formatting, zero insertion/deletion, and CRC generation/checking are provided. Both transmit and receive fax data are buffered within the modem. Data transfer to and from DTE is flow controlled by XON/XOFF and RTS/CTS.

Synchronous Access Mode (SAM) - Video Conferencing

V.80 Synchronous Access Mode between the modem and the host/DTE is provided for host-controlled communication protocols, e.g., H.324 video conferencing applications.

Voice-call-first (VCF) before switching to a videophone call is also supported.

Worldwide Operation

The modem operates in US/Japan/Canada/TBR21 and other countries. Country dependent parameters for functions such as dialing, carrier transmit level, calling tone, call progress tone detection, answer tone detection, blacklisting, and relay control are programmable by ConfigurACE II for Windows.

SmartDAA technology allows a single PCB design and single BOM to be homologated worldwide. Advanced features such as digital PBX protection are also supported.

TAM Mode

TAM Mode features include 8-bit μ-Law, A-Law, and linear coding at 8 kHz sample rate. Full-duplex voice supports concurrent voice receive and transmit. Tone detection and generation, call discrimination, and concurrent DTMF detection are also supported. ADPCM (4-bit IMA) coding is supported to meet Microsoft WHQL logo requirements.

TAM Mode is supported by three submodes:

1. Online Voice Command Mode supports connection to the telephone line or, for the S model, a handset.
2. Voice Receive Mode supports recording voice or audio data input from the telephone line or, for the S model, a microphone/handset.
3. Voice Transmit Mode supports playback of voice or audio data to the telephone line or, for the S model, a speaker/handset.

Voice/Speakerphone Mode (S Models)

S models include additional telephone handset, external microphone, and external speaker interfaces that support voice and full-duplex speakerphone operation.

Hands-free full-duplex telephone operation is supported in Speakerphone Mode under host control. Speakerphone Mode features an advanced proprietary speakerphone algorithm which supports full-duplex voice conversation with acoustic, line, and handset echo cancellation. Parameters are constantly adjusted to maintain stability with automatic fallback from full-duplex to pseudo-duplex operation. The speakerphone algorithm allows position independent placement of microphone and speaker. The host can separately control volume, muting, and AGC in microphone and speaker channels.

V.70 DSVD Mode using RCDSVD SCP Device (S Models)

On-board DSVD operation requires installation of the optional RCDSVD SCP (R6715-14). GSM operation is not available when the RCDSVD SCP is connected because MCU port PB5 is used for SCP chip select output (~SVDSEL) rather than address line A18 output which is needed to support the 4M ROM.

DSVD provides full-duplex digital simultaneous voice and data over a single telephone line. DSVD uses codecs in the RCDSVD SCP to code (compress) analog speech signals on the RCDSVD LINEIN pin or MICIN pin for passing to the modem controller in digitized form. DSVD also decodes (decompresses) coded speech received from the modem controller for routing to the RCDSVD LINEOUT pin or SPKP/SPKN pins in analog form.

DSVD operates in accordance with ITU-T interoperable G.729 and G.729 Annex A with interoperable G.729 Annex B. Voice activity detection supports speech coding at an average bit rate significantly lower than 8.0 kbps.

DSVD decoder timing recovery algorithm compensates for clock skew, asynchronous host-to-decoder data transfer delay, intervening variable length data block transmission delay, and loss of encoded speech data.

The voice interface can be in the form of a headset, handset or a microphone and speaker (half-duplex speakerphone). Handset echo cancellation supports handset use through a hybrid.

In Handset Mode, the RCDSVD SCP interfaces to the telephone interface circuit using the Line Input (LINEIN) and Line Out (LINEOUT) lines. In Headset or Speakerphone Mode, the RCDSVD SCP interfaces to the audio interface circuit using the Microphone Input (MICIN) and Speaker out (SPKR) lines.

GSM (Parallel Host or PC Card Interface)

GSM operation requires installation of 4M (512k x 8) ROM (56 models) or 2M ROM (33 and 14 models).

ON-board DSVD is not available when the 4 Mbit ROM is installed since the MCU port PB5 is used for address line 18 rather than RCDSVD SCP chip select output (~SVOSEL).

Features supported in GSM operation include:

- Data modem
  - V.21, V.23, V.22, V.22 bis, V.32
  - ISDN interoperability: 300 bps to 9600 bps
- Transparent asynchronous mode up to 9600 bps
- Non-transparent mode (RLP) up to 9600 bps
- Fax modem send and receive rate up to 9600 bps
- AT GSM commands (ETSI 07.07)
- GSM direct connect
- Firmware interface for OEM-provided phone driver
- Automatic GSM cable presence detection
- Built-in parallel host (16550A UART) interface

Sleep Mode

Sleep mode is supported in the modem device set and the RCDSVD SCP device.

Additional Information

Additional information is described in the SmartACFL Modem Device Family with SmartDAA Technology for Low Power Applications Designer's Guide (Doc. No. 100446) and the Command Reference Manual (Doc. No. 100500).

Hardware Description

SmartDAA™ technology (patent pending) eliminates the need for a costly analog transformer, relays, and opto-isolators that are typically used in discrete DAA implementations. The programmable SmartDAA architecture simplifies product implementation in worldwide markets by eliminating the need for country-specific components.

Microcontroller (MCU/MCUP)

The microcontroller is a Conexant 8-bit microcomputer with pins to support serial DTE/parallel host bus/PC Card, MDP, voice/TAM, speakerphone, and RCDSVD SCP interface operation. The operating voltage is +3.3V with +5V tolerant inputs.

The MCUP incorporates a built-in PC Card interface and CIS memory allowing the MCUP to directly connect to the PC Card 68-pin socket without requiring external PICA and CIS devices.

The MCU connects to the DTE/host via a V.24 (EIA/TIA-232-E) serial DTE interface or a parallel host bus depending on installed firmware, whereas the MCUP connects to a PC Card socket via built-in PC Card interface. Unless otherwise stated, references to general microcontroller functions include both the MCUP and MCU.

The MCU performs the command processing and host interface functions. The crystal frequency is 28.224 MHz. The MCU outputs a 28.224 MHz clock to the MDP eliminating need for a separate MDP crystal circuit.

The MCU connects to the MDP via dedicated lines and the external bus. The external bus also connects to OEM-supplied RAM (56 models), ROM/flash ROM, and to the optional RCDSVD SCP.

The MCU connects to a serial EEPROM over a dedicated serial interface.

Two independent functions are supported; the modem function and an optional user-defined Function 2. A Card Option Configuration Register and a Configuration and Status Register for each function allow independent configuration/control and status reporting of the respective function.

The MCUP PC Card interface features include:

- PC Card interface logic and memory
  - Internal 512-byte Card Information Structure (CIS) provides the tuple information needed to define the PC Card functionality.
  - CIS Table is configurable from ROM/flash memory (default) or from NVRAM (option)
  - Address decode logic
- Modem Function
  - Decoding for standard COM ports in Overlapping I/O Address Mode
  - Independent I/O Address Mode support
  - Power-down mode control
  - Digital speaker pass-through
  - Supports two ring handling methods
  - Ring Indicate pass-through to Status Change
  - Six 8-bit Modem Function Card Configuration Registers
    - Configuration Option Register (full support)
    - Configuration and Status Register (full support)
    - Pin Replacement Register (CREADY and RREADY)
    - Extended Status Register (RIEvt and RIEnab)
    - I/O Base Register 0
    - I/O Base Register 1
- Optional User-defined Function 2
  - Reset and chip select control
  - Power-down mode control
  - 16-bit data transfer control
  - Disable EEPROM control
  - Interrupt request pass through
  - Four 8-bit Card Configuration Registers
    - Configuration Option Register (full support)
    - Configuration and Status Register (full support)
    - I/O Base Register 0
    - I/O Base Register 1
- MCU and MCUP packaged in 128-pin TQFP

RCDSVD Speech Codec Processor (SCP) (Optional)

The RCDSVD SCP (R6715-14), required for on-board DSVD operation, is packaged in a 100-pin PQFP. The 56.448 MHz crystal frequency is supplied by the MDP XCLK output.

MCU/MCUP Firmware

MCU/MCUP firmware performs processing of general modem control, command sets, data modem, error correction and data compression (ECC), fax class 1, fax class 2, DSVD, voice/audio/TAM/speakerphone, W-class, V.80, analog cellular, GSM, and serial DTE/parallel host/PC Card interface functions according to modem models (Table 1).

Configurations of the modem firmware are provided to support parallel host bus interface (MCU), serial DTE interface (MCU) or PC Card interface (MCUP) operation.

The modem firmware is provided in object code form for the OEM to program into external ROM/flash ROM. The modem firmware may also be provided in source code form under a source code addendum license agreement.

Modem Data Pump (MDP)

The Modem Data Pump (MDP) supports data/fax modem, voice record from and playback to the telephone line, and optional voice/full-duplex speakerphone operation. The MDP communicates with the MCU via parallel bus, serial data and clock, and serial voice (optional) signals. Downloadable architecture allows upgrading of MDP code from the MCU.

The MDP, packaged in a 100-pin TQFP, includes a modem controller interface, a digital signal processor (DSP), a voice codec (VC) interface, and a SmartDAA Interface.

The MDP performs telephone line signal modulation/demodulation in a hardware DSP which reduces computational load on the host processor. Downloadable architecture allows updating of MDP executable code.

The SmartDAA Interface communicates with, and supplies power and clock to, the LSD through the DIB.

The input clock frequency is 28.224 MHz and is supplied by the MCU. The operating voltage is +3.3V with +5V tolerant inputs.

ADPCM voice processing is supported.

Downloading of MDP code from the MCU is supported.

Digital Isolation Barrier (DIB) (OEM Supplied)

The DIB electrically DC isolates the MDP from the LSD. The MDP is connected to a fixed digital ground and operates with standard CMOS logic levels. The LSD is connected to a floating ground and can tolerate high voltage input (compatible with telephone line and typical surge requirements).

A digital transformer (DXFMR) in the DIB power channel couples power and clock digital waveforms from the MDP to the LSD.

The DIB data channel supports bidirectional half-duplex serial transfer of data, control, and status information between the MDP and the LSD over two lines.

SmartDAA Line Side Device (LSD)

The LSD includes a Line Side DIB Interface (LSDI), a coder/decoder (codec), and a Telephone Line Interface (TLI).

The LSDI communicates with, and receives power and clock from, the SmartDAA interface in the MDP through the DIB.

LSD power is received from the top of the DIB DXFMR secondary winding through a half-wave rectifying diode and capacitive power filter circuit. The CLK input is also accepted from the top of the DXFMR secondary winding through a capacitor and a resistor in series.

Information is transferred between the LSD and the MDP through the DIB_P and DIB_N pins. These pins connect to the MDP DIB_DATAP and DIB_DATAN pins, respectively, through the DIB.

The TLI integrates DAA and direct telephone line interface functions and connects directly to the line TIP and RING pins, as well as to external line protection components.

Direct LSD connection to TIP and RING allows real-time measurement of telephone line parameters, such as the telephone central office (CO) battery voltage and individual telephone line (copper wire) resistance. Direct LSD connection also allows dynamic regulation of the off-hook TIP and RING voltage and total current drawn from the CO. This allows the modem to maintain compliance with U.S. and worldwide regulations and to actively control the DAA power dissipation.

Voice Codec (VC)

The optional VC, packaged in a 32-pin TQFP, supports voice/full-duplex speakerphone (FDSP) operation with interfaces to a microphone and speaker and to a telephone handset/headset.

MCU/MCUP (L2702) Pinout Diagrams

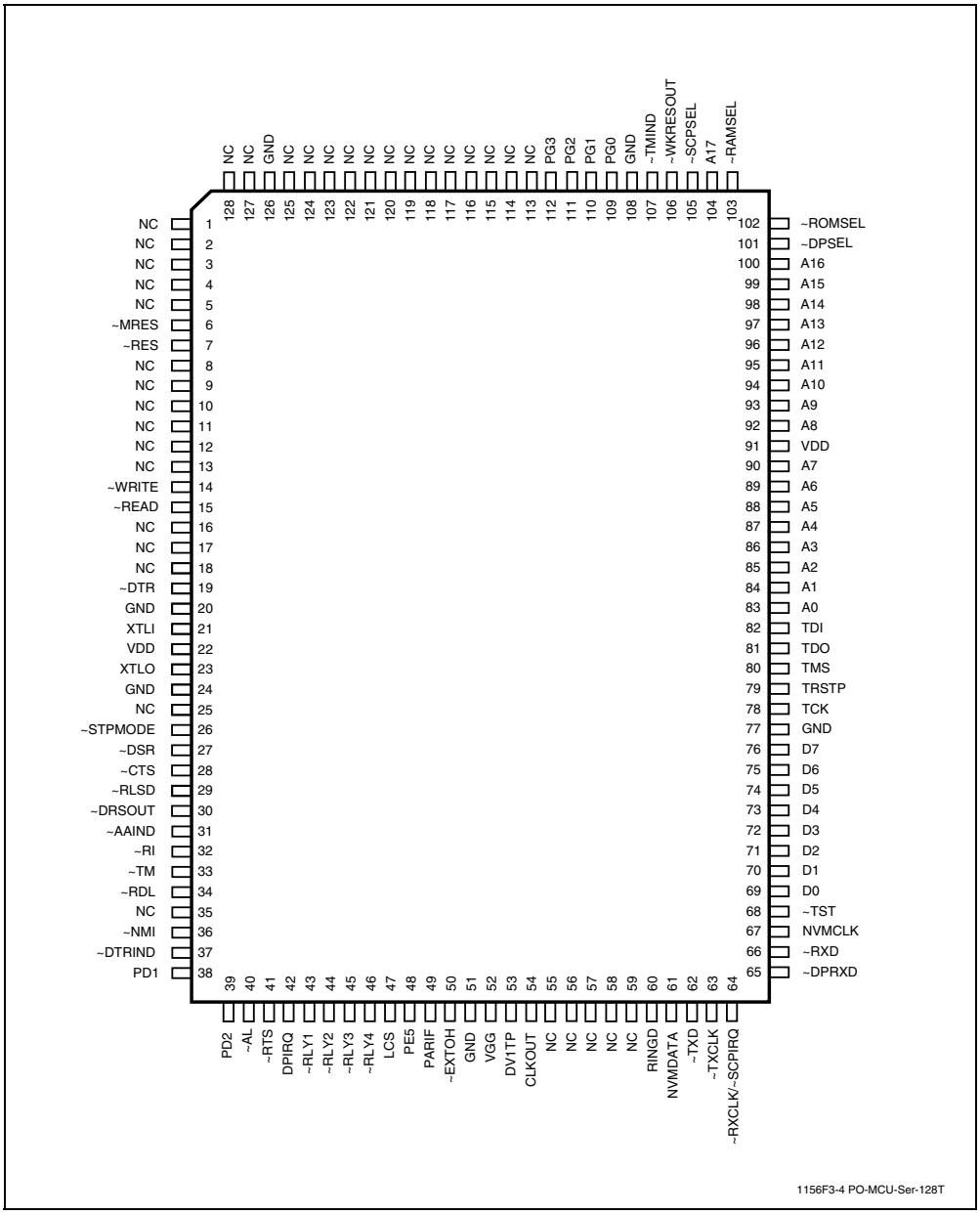

Figure 2. MCU Pin Signals - Serial DTE Interface 128-Pin TQFP

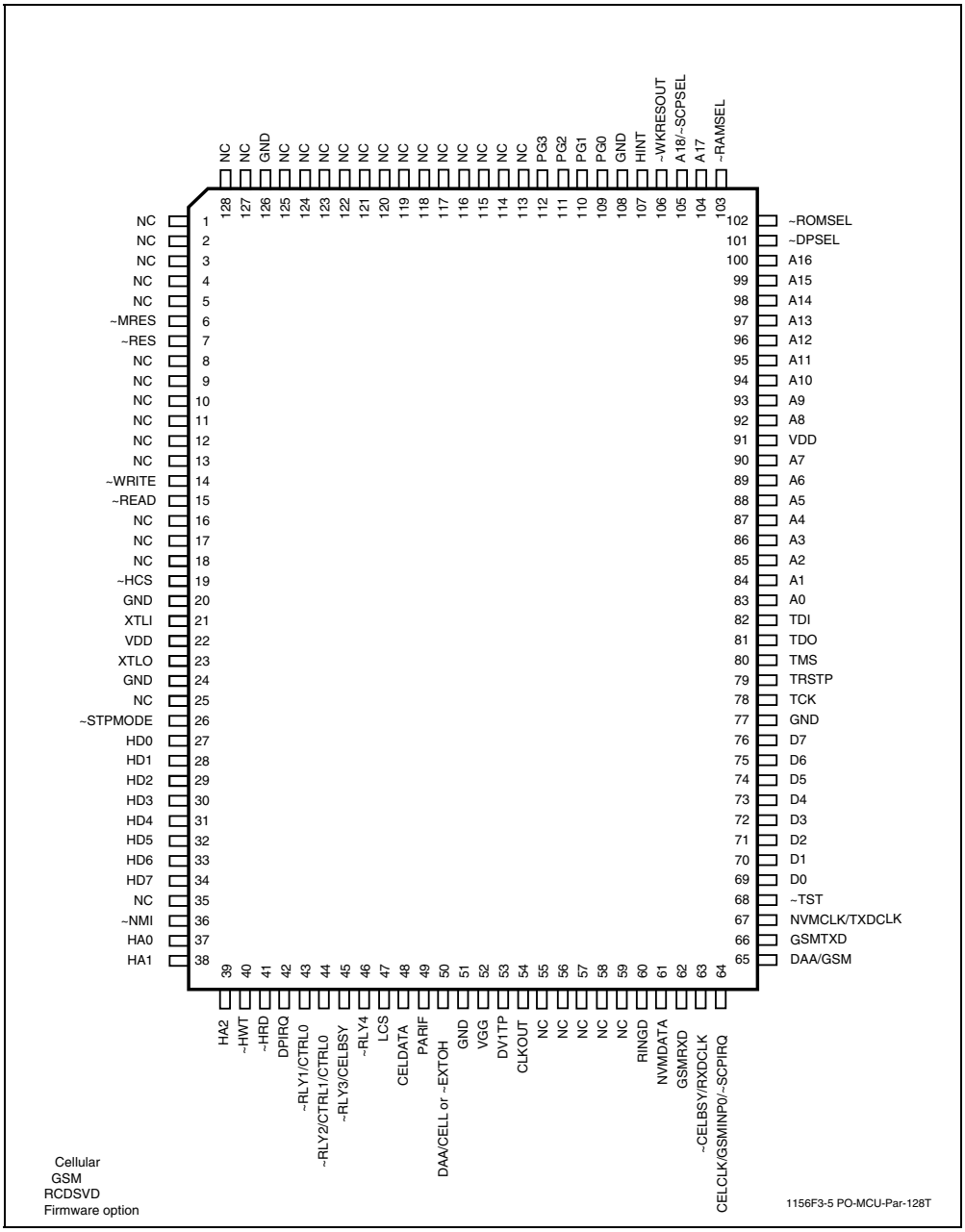

Figure 3. MCU Pin Signals - Parallel Host Interface - 128-Pin TQFP

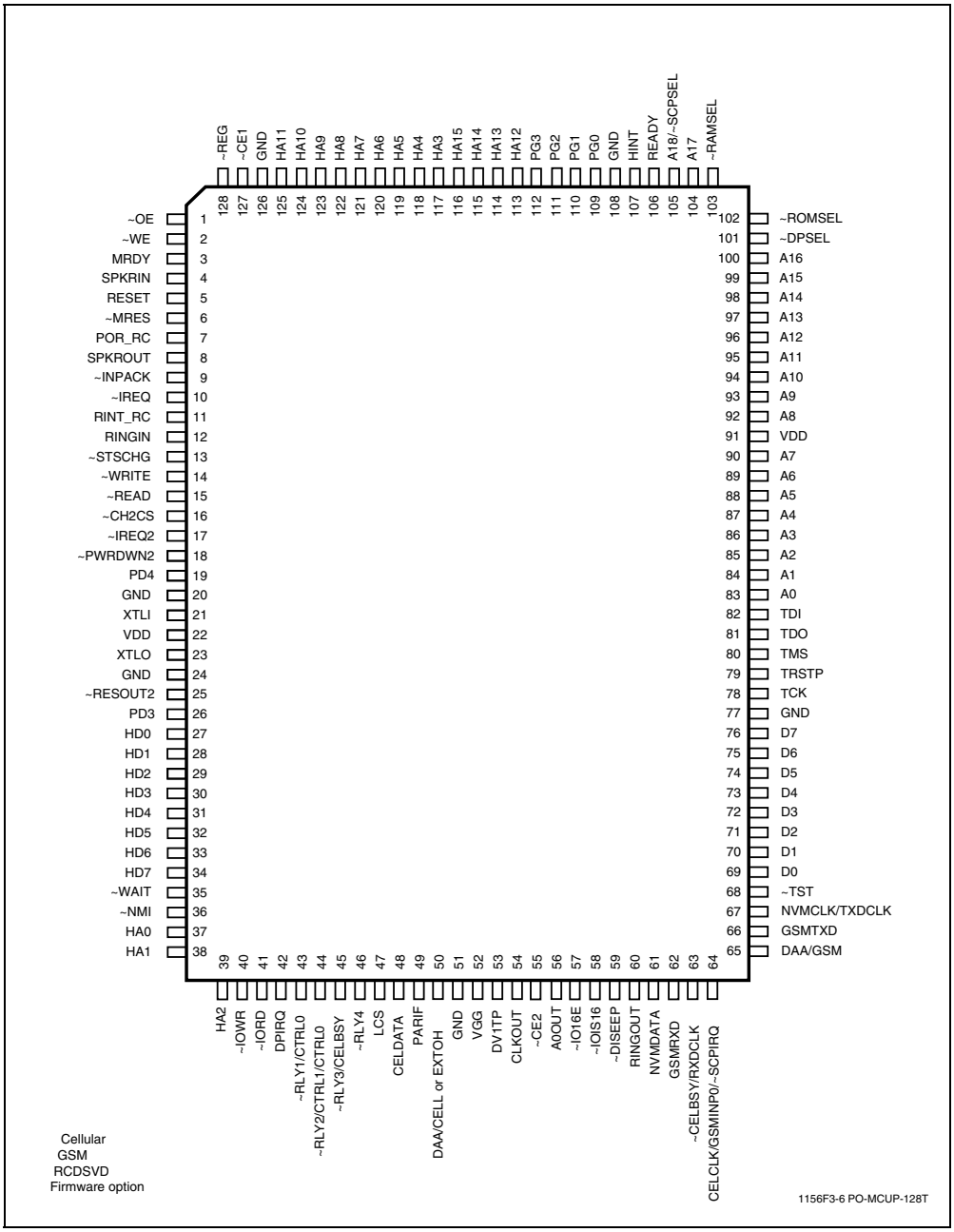

Figure 4. MCUP Pin Signals - PC Card Interface - 128-Pin TQFP

MDP (P9373) Hardware Pins and Signals

General

The major functional application signals are summarized below.

System Control and Status

The following discrete signals are used by the host to control and monitor MDP operation:

- Wakeup Reset (WKRES#); input
- Interrupt Request for MDP Interface (IRQ); output
- Raw Ring (SSD_RING#); output
- Ring Wake Reset (SSD_RINGWAKE#); output
- SmartDAA Interrupt for SmartDAA Interface (SSD_INT); output

Digital Speaker Interface

The following output is used for audible call progress or carrier monitoring in Data/Fax mode only where sound quality is not important.

- Digital Speaker Output (DSPKOUT); output

Host Parallel Bus Interface

The parallel address, data, and control signals are:

- Address Lines (A[6:0]); input
- Data Lines (D[7:0]), input/output
- Chip Select (CS#); input
- Read Enable (READ#); input
- Write Enable (WRITE#); output

Host Serial Data Interface

The serial data and clock signals are:

- Receive Data (RXD); output
- Receive Data Clock (RXCLK); output
- Transmit Data (TXD); input
- Transmit Data Clock (TXCLK); output

Host Serial Voice Interface (S models)

The serial data and clock signals are:

- Serial Data Out (SI_DD); output
- Serial Data In (SI_DU); input
- Serial Shift Clock (SI_CLK); input
- Sample Shift Clock (SI_FRAME); input

LSD Interface (Through DIB)

The DIB interface signals are:

- Clock and Power Positive (PWRCLKP); output
- Clock and Power Negative (PWRCLKN); output
- Data Positive (DIB_DATAP); input/output
- Data Negative (DIB_DATAN); input/output

VC Interface

The VC interface signals are:

- Sleep (IASLEEP); output
- Master Clock (M_CLK); output
- Voice Serial Clock (V_SCLK); output
- Voice Serial Control (V_CTRL); output
- Voice Serial Frame Sync (V_STROBE); input
- Voice Serial Transmit Data (V_TXSIN); output
- Voice Serial Receive Data (V_RXOUT); input

MDP Signal Interface and Pin Assignments

The MDP (P9373) 100-pin TQFP hardware interface signals are shown in Figure 5.

The MDP (P9373) 100-pin TQFP pin signals are shown in Figure 6.

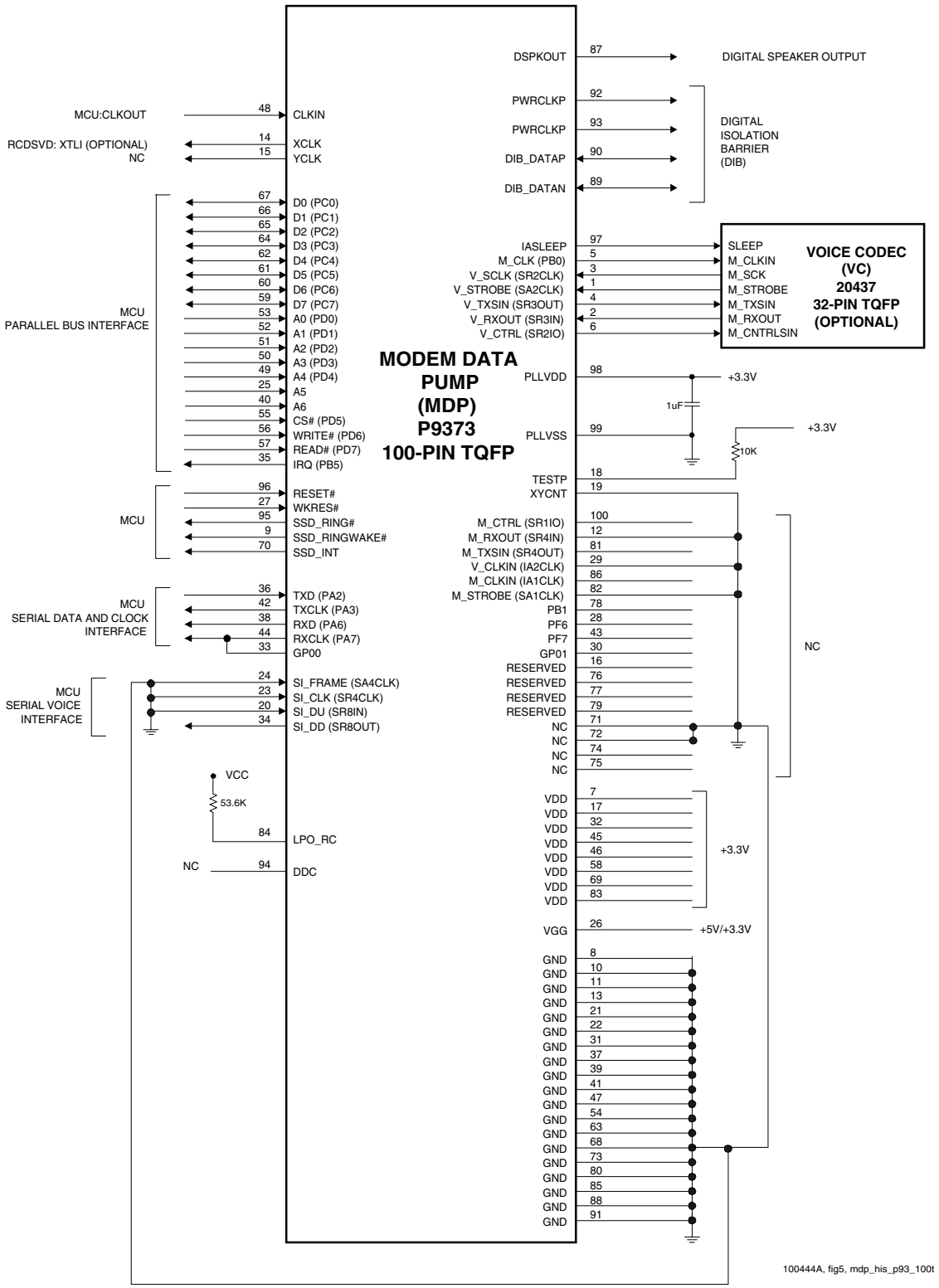

Figure 5. MDP (P9373) 100-Pin TQFP Hardware Interface Signals

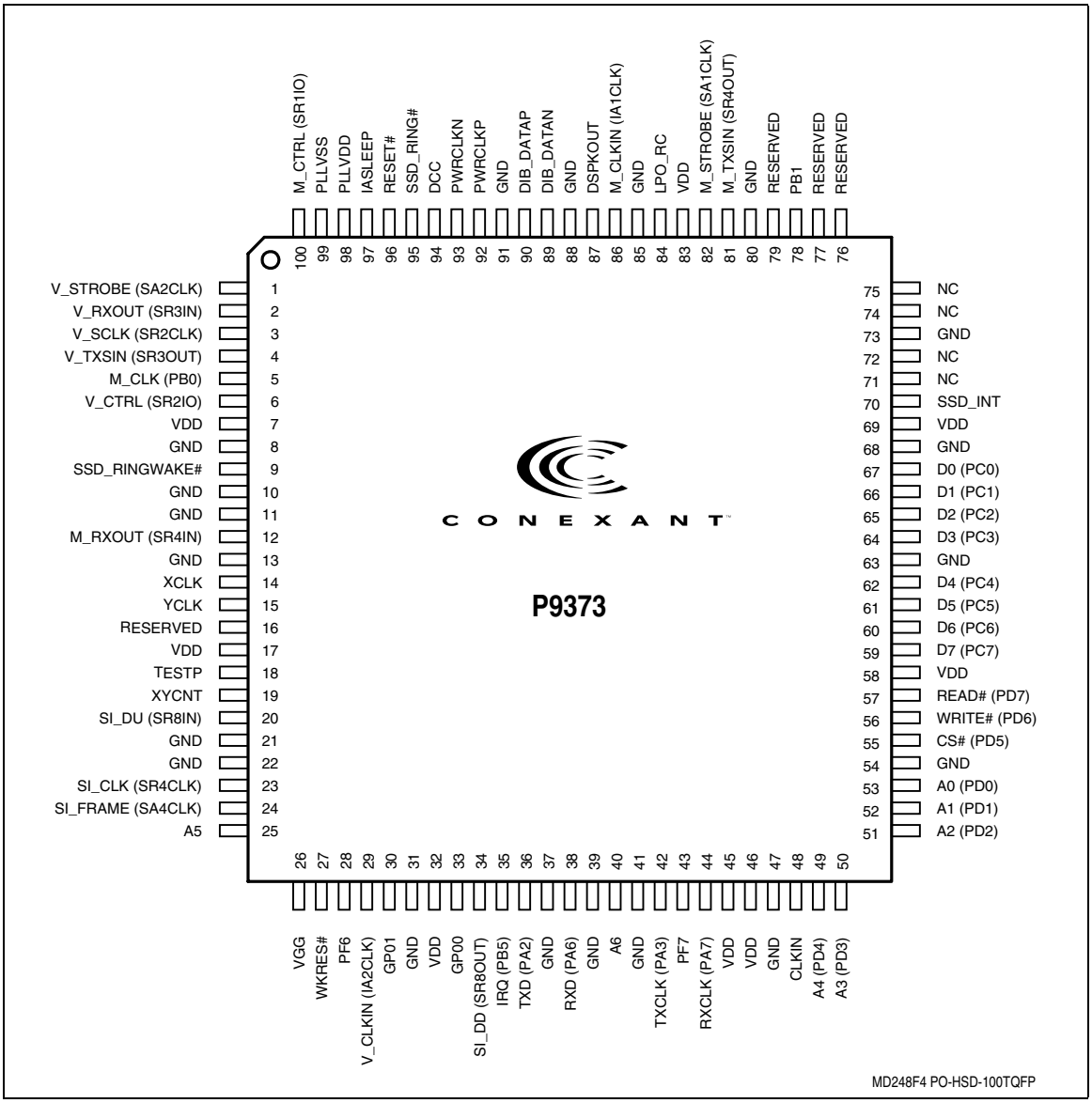

Figure 6. MDP (P9373) 100-Pin TQFP Pin Signals

LSD Hardware Pins and Signals

MDP Interface (Through DIB)

The DIB interface signals are:

- Clock (CLK); input
- Digital Power (PWR+); input power
- Digital Ground (DGND); digital ground
- Data Positive (DIB_P); input
- Data Negative (DIB_N); input

Telephone Line Interface

The telephone line interface signals are:

- RING AC Coupled (RAC1); input
- TIP AC Coupled (TAC1); input
- Electronic Inductor Resistor (EIR); output
- TIP and RING DC Measurement (TRDC); input
- DAC Output Voltage (DAC); output
- Electronic Inductor Capacitor (EIC)
- Electronic Inductor Output (EIO)
- Electronic Inductor Feedback (EIF)
- Resistive Divider Midpoint (DCF)
- Transmit Analog Output (TXA); output
- Receive Analog Input (RXI); input
- Receiver Gain (RXG); output
- MOV Enable (MOVEN); output
- World-wide Impedance 0 (ZW0); input
- US Impedance 0 (ZUS0); input
- Transmit Feedback (TXF); input
- Transmit Output (TXO); output

LSD Signal Interface and Pin Assignments

The LSD (20463) 32-pin TQFP hardware interface signals are shown by major interface in Figure 7.

The LSD (20463) 32-pin TQFP pin signals are shown in Figure 8.

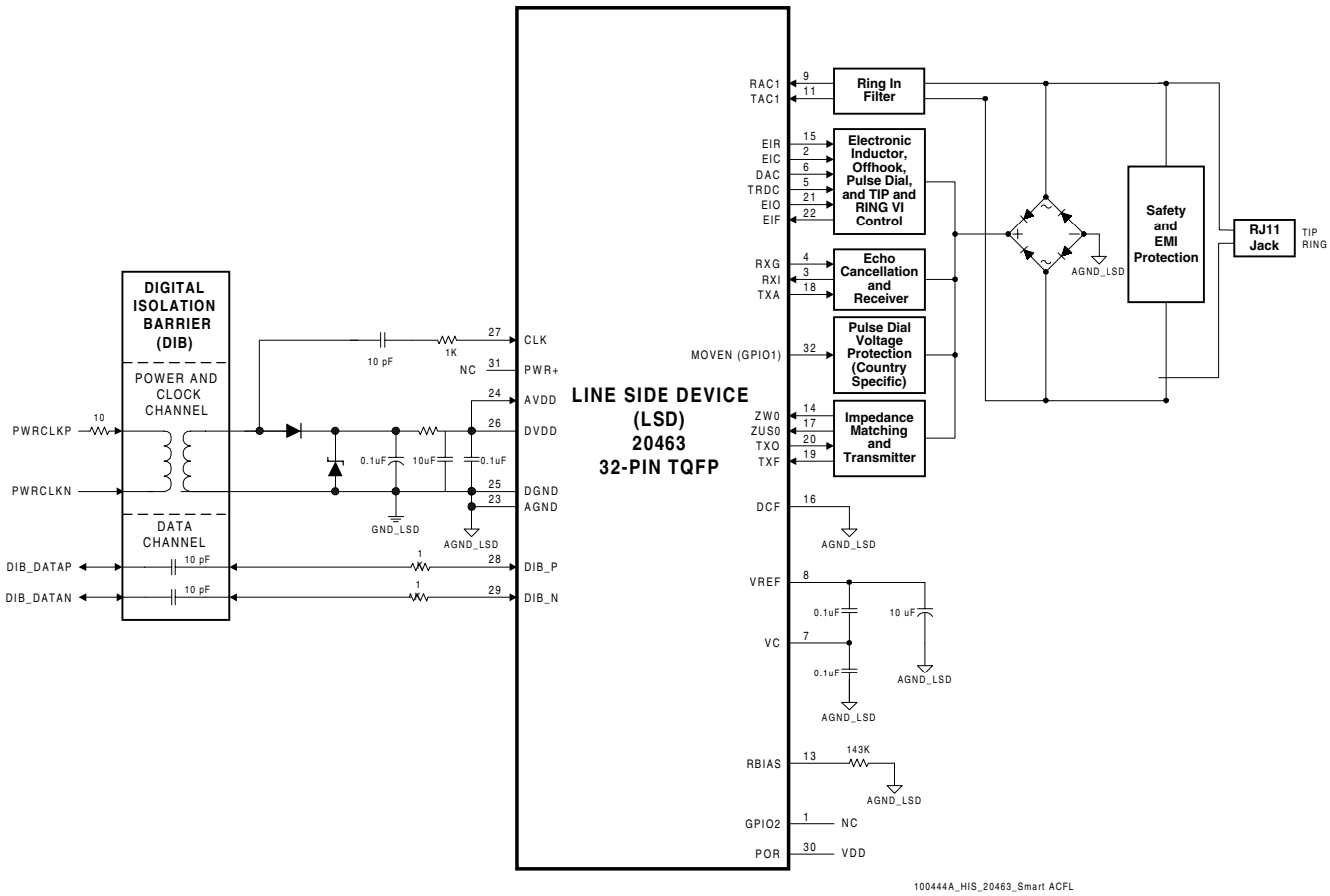

Figure 7. LSD (20463) 32-Pin TQFP Hardware Interface Signals

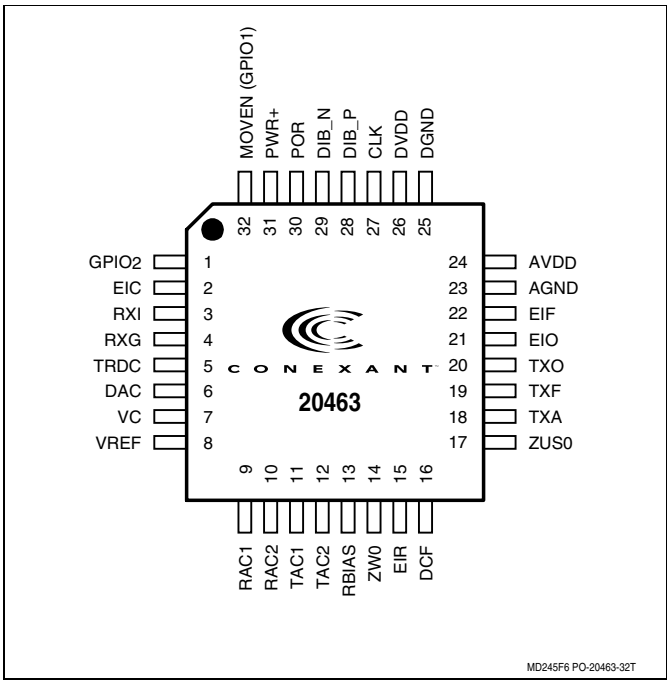

Figure 8. LSD (20463) 32-Pin TQFP Pin Signals

VC (20437) Hardware Pins and Signals (S Models)

General

Microphone and analog speaker interface signals, as well as telephone handset/head interface signals are provided to support functions such as speakerphone mode, telephone emulation, microphone voice record, speaker voice playback, and call progress monitor.

Speakerphone Interface

The following signals are supported:

- Speaker Out (M_SPKR_OUT); analog output - Should be used in speakerphone designs where sound quality is important.
- Microphone (M_MIC_IN); analog input

Telephone Handset/Headset Interface

- Telephone Input (M_LINE_IN), input (TELIN) – Optional connection to a telephone handset a telephone handset interface circuit.
- Telephone output (M_LINE_OUTP); output (TELOUT) - Optional connection to a telephone handset interface circuit.
- Center Voltage (VC_HANDSET); output reference voltage.

MDP Interface

The following interface signals are supported:

- Reset (POR); input
- Sleep (SLEEP); input
- Master Clock (M_CLKIN); input.
- Serial Clock (M_SCK); output.
- Control (M_CNTRLSIN); input
- Serial Frame Sync (M_STROBE); output.
- Serial Transmit Data (M_TXSIN); input.
- Serial Receive Data (M_RXOUT); output.

VC Interface Signals and Pin Assignments

The VC (20437) 32-pin TQFP hardware interface signals are shown by major interface in Figure 9.

The VC (20437) 32-pin TQFP pin signals are shown in Figure 10.

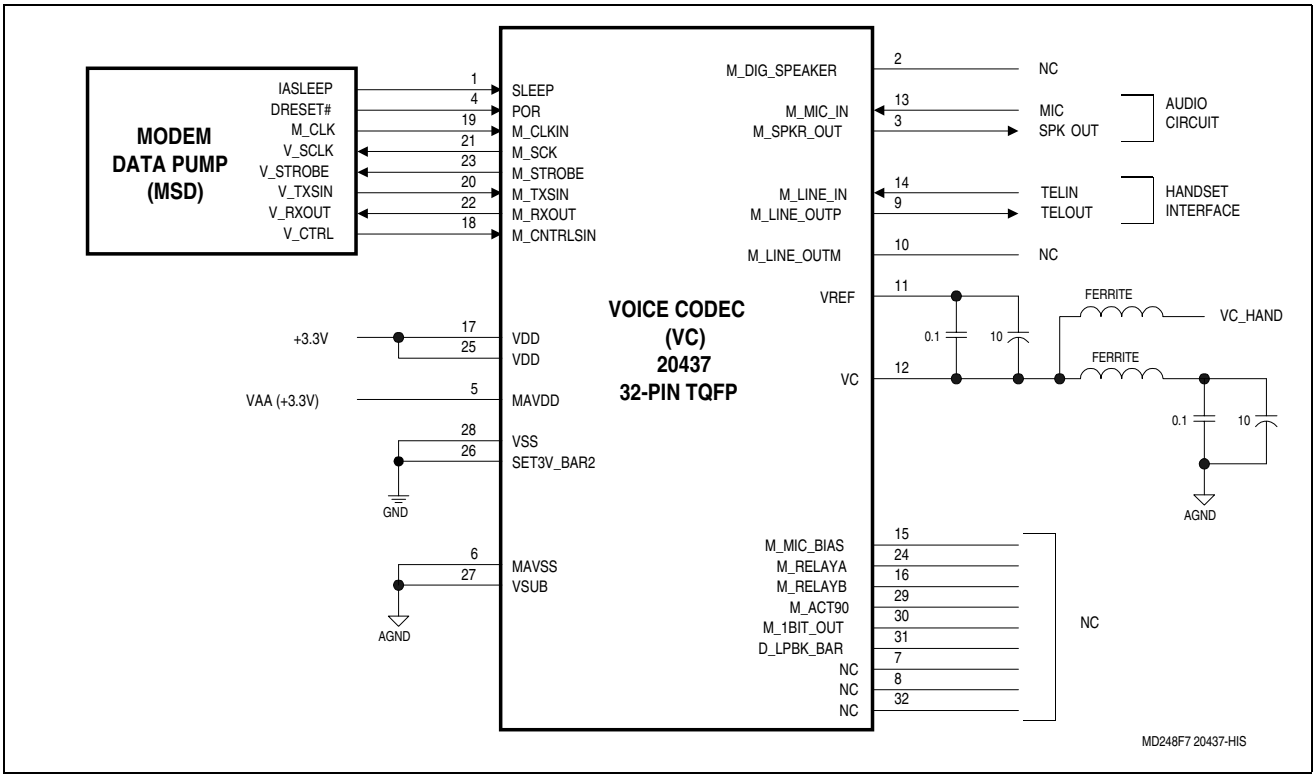

Figure 9. VC (20437) 32-Pin TQFP Hardware Interface Signals

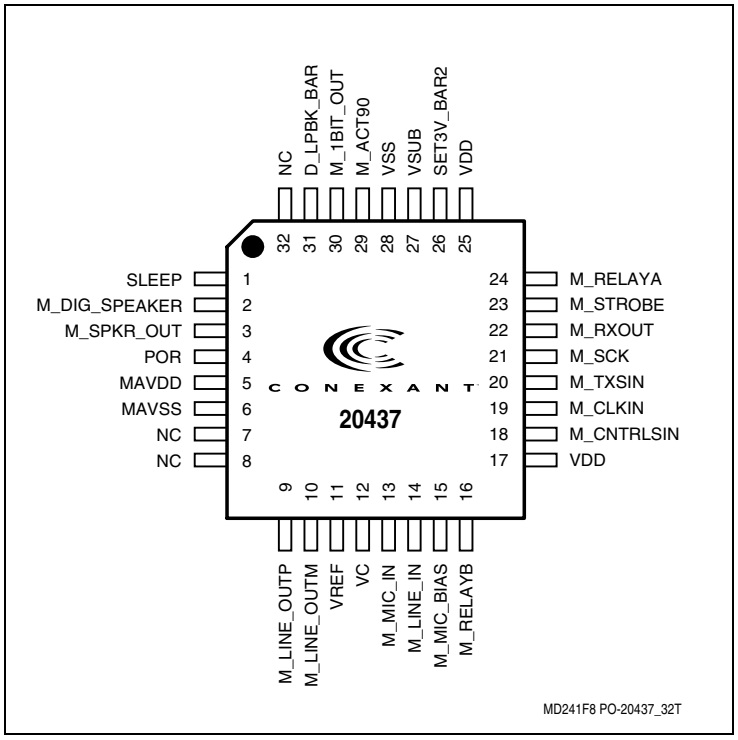

Figure 10. VC (20437) 32-Pin TQFP Pin Signals

Electrical and Environmental Specifications

Table 2. Operating Conditions

Parameter	Symbol	Limits	Units
Supply Voltage	V_{DD}	MCU, MDP, VC: +3.0 to +3.6	VDC
Operating Temperature Range	T_A	-0 to +70	°C

Table 3. Absolute Maximum Ratings

Parameter	Symbol	Limits	Units
Supply Voltage	V_{DD}	-0.5 to +4.6	VDC
Input Voltage	V_{IN}	-0.5 to (VIO +0.5)*	VDC
Storage Temperature Range	T_{STG}	-55 to +125	°C
Analog Inputs	V_{IN}	-0.3 to (VAA + 0.5)	VDC
Voltage Applied to Outputs in High Impedance (Off) State	V_{HZ}	-0.5 to (VIO +0.5)*	VDC
DC Input Clamp Current	I_{IK}	±20	mA
DC Output Clamp Current	I_{OK}	±20	mA
Static Discharge Voltage (25°C)	V_{ESD}	±2500	VDC
Latch-up Current (25°C)	I_{TRIG}	±400	mA
* VIO = +3.3V ± 0.3V or +5V ± 5%.			

Table 4. Current and Power Requirements

Mode	Typ Current (Ityp) (mA)	Max Current (Imax) (mA)	Typ Power (Ptyp) (mW)	Max Power (Pmax) (mW)	Notes
MCU (L2702-xx)					
Normal Mode	TBD	TBD	TBD	TBD	f = 28.224 MHz
Sleep Mode	TBD	TBD	TBD	TBD	f = 28.224 MHz
Stop Mode	TBD	TBD	TBD	TBD	f = 0 MHz
MDP (P9373)					
Normal Mode	TBD	TBD	TBD	TBD	f = 28.224 MHz
Sleep Mode	TBD	TBD	TBD	TBD	f = 28.224 MHz
Stop Mode	TBD	TBD	TBD	TBD	f = 0 MHz
LSD (20463)					
Normal Mode: Off-hook, normal data connection	TBD	TBD	TBD	TBD	
Normal Mode: On-hook, idle, waiting for ring	TBD	TBD	TBD	TBD	
Low Power Mode	TBD	TBD	TBD	TBD	
VC (20437)					
Normal Mode	TBD	TBD	TBD	TBD	
Sleep Mode	TBD	TBD	TBD	TBD	
Stop Mode	TBD	TBD	TBD	TBD	

1. Operating voltage: VDD = +3.3V ± 0.3V.
2. Test conditions: VDD = +3.3V for typical values; VDD = +3.6V for maximum values.
3. Input Ripple ≤ 0.1 Vpeak-peak.
4. f = Internal frequency.
5. Stop Mode is the same as Sleep Mode with clocks turned off.
6. Typical current (Ityp) estimated; Max current estimated from Ityp: Imax = Ityp * 1.1.
7. Typical power (Ptyp) computed from Ityp: Ptyp = Ityp * 3.3V; Max power (Pmax) computed from Imax: Pmax = Imax * 3.6V.

Package Dimensions

The package dimensions are shown in Figure 11 (128-pin TQFP), Figure 12 (100-pin TQFP) and Figure 13 (32-pin TQFP).

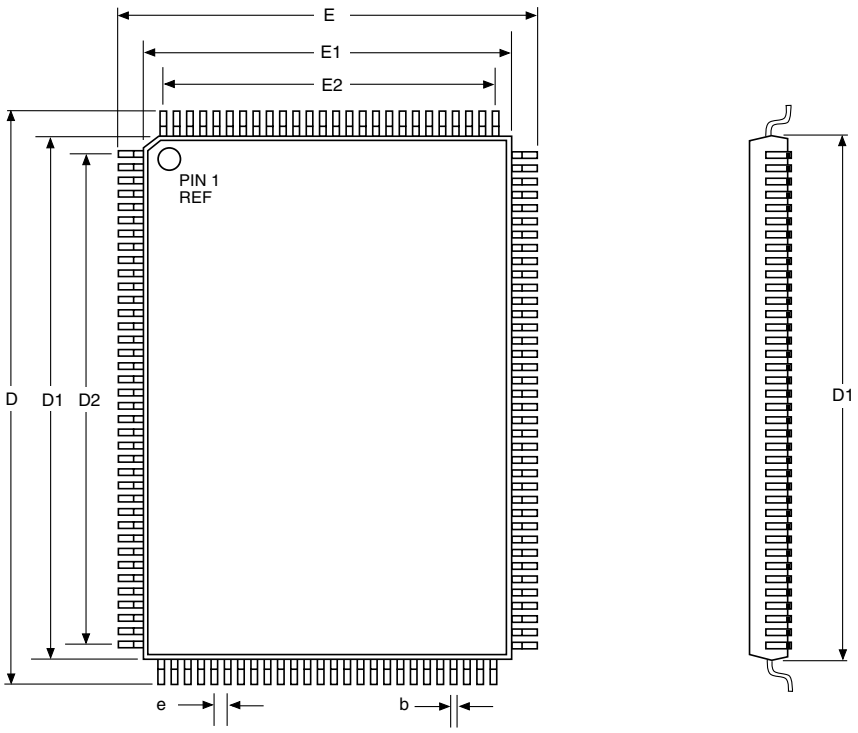

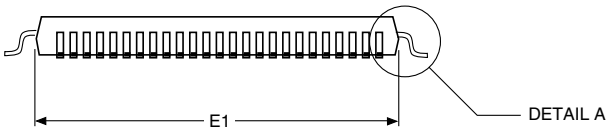

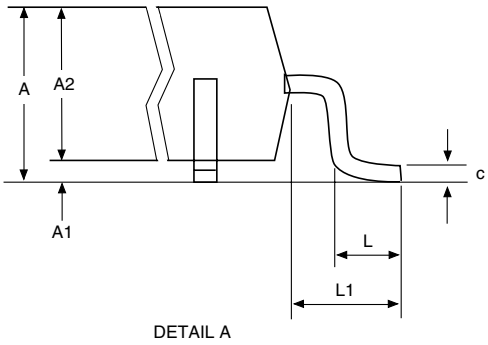

Dim.	Millimeters Min.	Millimeters Max.	Inches Min.	Inches Max.
A	1.6 MAX		0.0630 MAX	
A1	0.05	0.15	0.0020	0.0059
A2	1.4 REF		0.0551 REF	
D	21.75	22.25	0.8563	0.8760
D1	20.0 REF		0.7874 REF	
D2	18.5 REF		0.7283 REF	
E	15.75	16.25	0.6201	0.6398
E1	14.0 REF		0.5512 REF	
E2	12.5 REF		0.4921 REF	
L	0.5	0.75	0.0197	0.0295
L1	1.0 REF		0.0394 REF	
e	0.50 BSC		0.0197 BSC	
b	0.17	0.27	0.0067	0.0106
c	0.11	0.17	0.0043	0.0067
Coplanarity	0.08 MAX		0.0031 MAX	
Ref: 128-PIN TQFP (GP00-D264)				

* Metric values (millimeters) should be used for PCB layout. English values (inches) are converted from metric values and may include round-off errors.

PD-TQFP-128 (040395)

Figure 11. Package Dimensions - 128-Pin TQFP

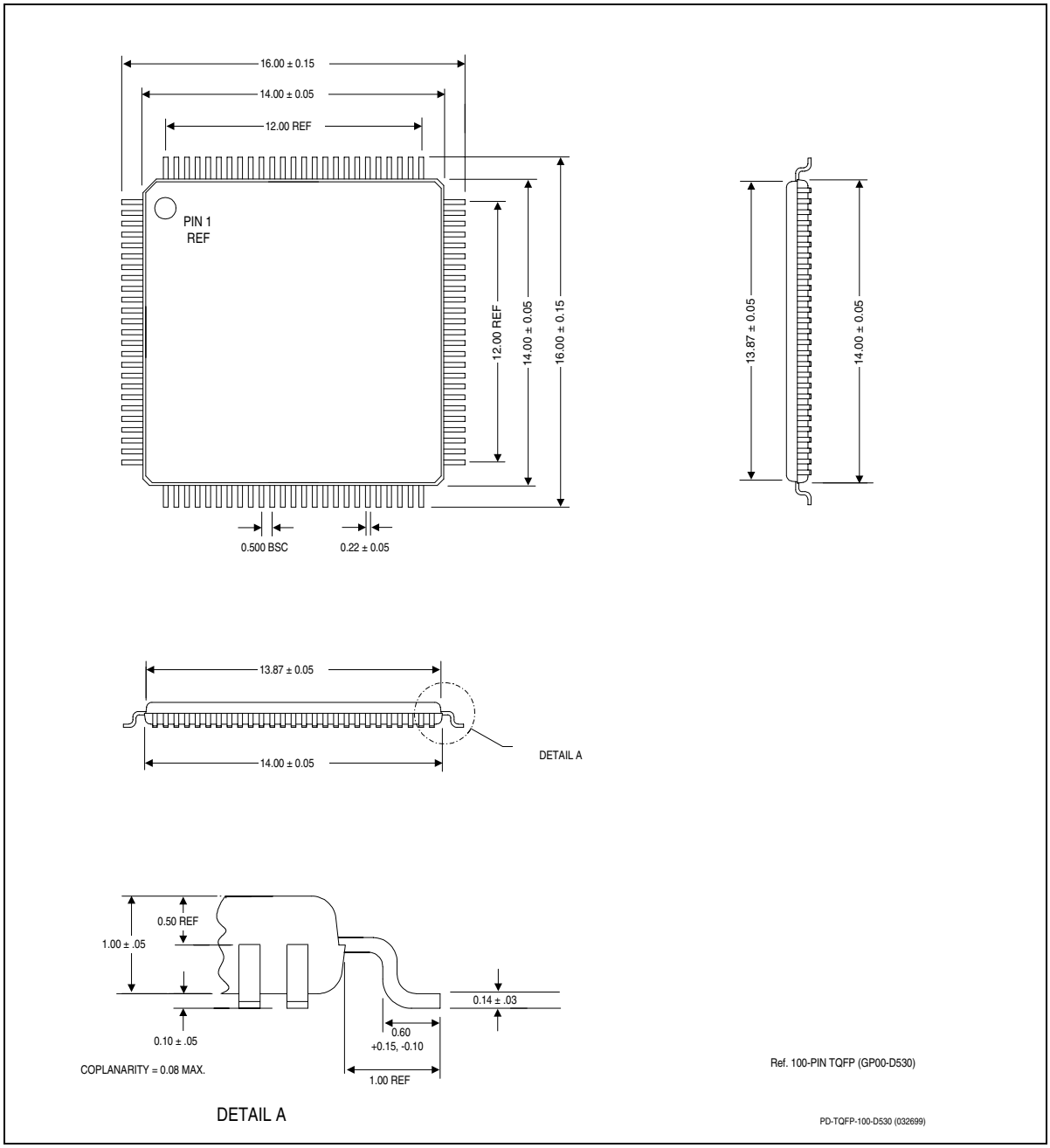

Figure 12. Package Dimensions - 100-Pin TQFP

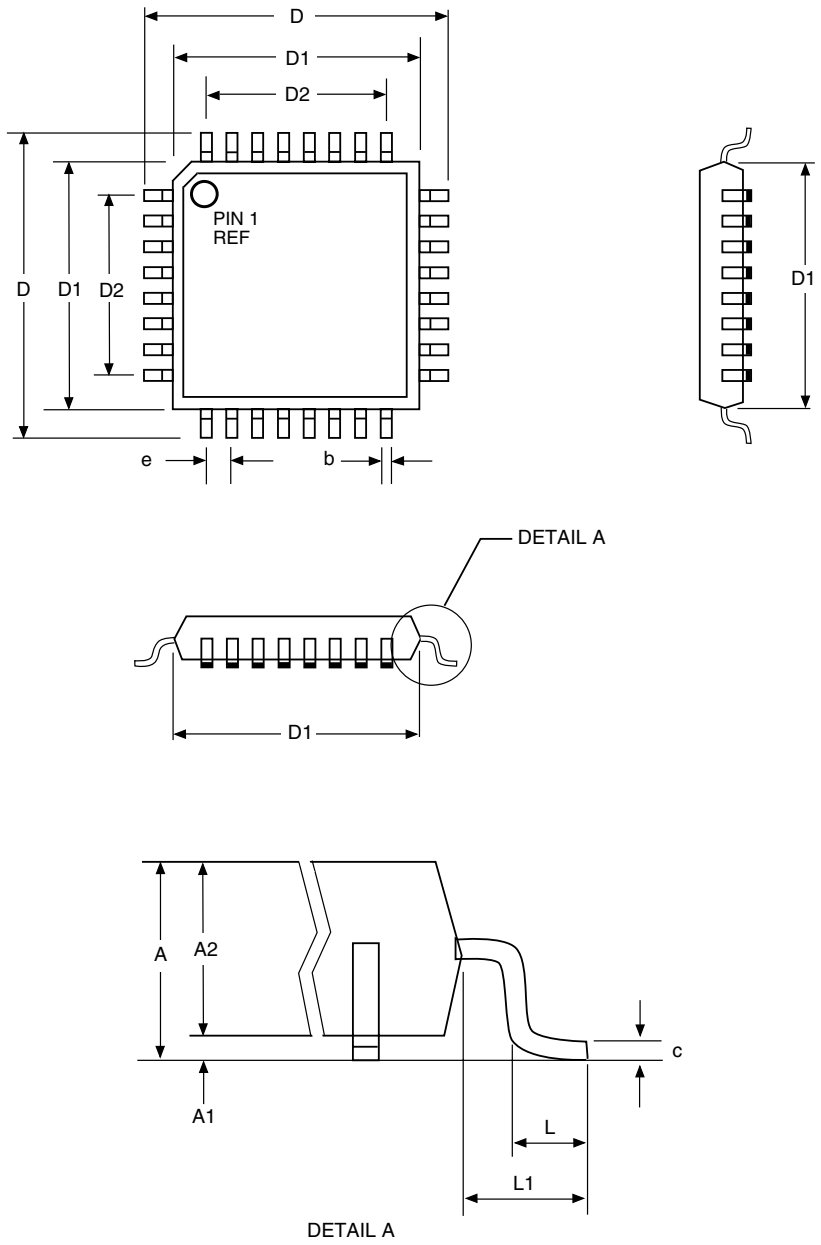

Dim.	Millimeters Min.	Millimeters Max.	Inches Min.	Inches Max.
A	1.6 MAX		0.0630 MAX	
A1	0.05	0.15	0.0020	0.0059
A2	1.4 REF		0.0551 REF	
D	8.75	9.25	0.3445	0.3642
D1	7.0 REF		0.2756 REF	
D2	5.6 REF		0.2205 REF	
L	0.5	0.75	0.0197	0.0295
L1	1.0 REF		0.0394 REF	
e	0.80 BSC		0.0315 BSC	
b	0.30	0.40	0.0118	0.0157
c	0.13	0.19	0.0051	0.0075
Coplanarity	0.10 MAX		0.004 MAX	
Ref: 32-PIN TQFP (GP00-D262)				

* Metric values (millimeters) should be used for PCB layout. English values (inches) are converted from metric values and may include round-off errors.

PD-TQFP-32 (040395)

Figure 13. Package Dimensions - 32-Pin TQFP

CONEXANT™
What's next in communications technologies™

Further Information:
literature@conexant.com
1-800-854-8099 (North America)
33-14-906-3980 (International)

Web Site
www.conexant.com

World Headquarters
Conexant Systems, Inc.
4311 Jamboree Road,
P.O. Box C
Newport Beach, CA 92658-8902
Phone: (949) 483-4600
Fax: (949) 483-6375

U.S. Florida/South America
Phone: (727) 799-8406
Fax: (727) 799-8306

U.S. Los Angeles
Phone: (805) 376-0559
Fax: (805) 376-8180

U.S. Mid-Atlantic
Phone: (215) 244-6784
Fax: (215) 244-9292

U.S. North Central
Phone: (630) 773-3454
Fax: (630) 773-3907

U.S. Northeast
Phone: (978) 692-7660
Fax: (978) 692-8185

U.S. Northwest/Pacific West
Phone: (408) 249-9696
Fax: (408) 249-7113

U.S. South Central
Phone: (972) 733-0723
Fax: (972) 407-0639

U.S. Southeast
Phone: (919) 858-9110
Fax: (919) 858-8669

U.S. Southwest
Phone: (949) 483-9119
Fax: (949) 483-9090

APAC Headquarters
Conexant Systems Singapore,
Pte. Ltd.
1 Kim Seng Promenade
Great World City
#09-01 East Tower
Singapore 237994
Phone: (65) 737 7355
Fax: (65) 737 9077

Australia
Phone: (61 2) 9869 4088
Fax: (61 2) 9869 4077

China
Phone: (86 2) 6361 2515
Fax: (86 2) 6361 2516

Hong Kong
Phone: (852) 2 827 0181
Fax: (852) 2 827 6488

India
Phone: (91 11) 692 4780
Fax: (91 11) 692 4712

Korea - Seoul Office
Phone: (82 2) 565 2880
Fax: (82 2) 565 1440

Korea - Taegu Office
Phone: (82 53) 745-2880
Fax: (82 53) 745-1440

Europe Headquarters
Conexant Systems France
Les Taissounieres B1
1681 Route des Dolines
BP 283
06905 Sophia Antipolis Cedex
France
Phone: (33 1) 41 44 36 50
Fax: (33 1) 93 00 33 03

Europe Central
Phone: (49 89) 829 1320
Fax: (49 89) 834 2734

Europe Mediterranean
Phone: (39 02) 9317 9911
Fax (39 02) 9317 9913

Europe North
Phone: (44 1344) 486 444
Fax: (44 1344) 486 555

Europe South
Phone: (33 1) 41 44 36 50
Fax: (33 1) 41 44 36 90

Middle East Headquarters
Conexant Systems Commercial
(Israel) Ltd.
P.O. Box 12660
Herzlia 46733
Israel
Phone: (972 9) 952 4064
Fax: (972 9) 951 3924

Japan Headquarters
Conexant Systems Japan Co., Ltd.
Shimomoto Building
1-46-3 Hatsudai,
Shibuya-ku
Tokyo, 151-0061
Japan
Phone: (81 3) 5371 1567
Fax: (81 3) 5371 1501

Taiwan Headquarters
Conexant Systems, Taiwan Co., Ltd.
Room 2808
International Trade Building
333 Keelung Road, Section 1
Taipei 110
Taiwan, ROC
Phone: (886 2) 2720 0282
Fax: (886 2) 2757 6760

Компания «ЭлектроПласт» предлагает заключение долгосрочных отношений при поставках импортных электронных компонентов на взаимовыгодных условиях!

Наши преимущества:

- Оперативные поставки широкого спектра электронных компонентов отечественного и импортного производства напрямую от производителей и с крупнейших мировых складов;
- Поставка более 17-ти миллионов наименований электронных компонентов;
- Поставка сложных, дефицитных, либо снятых с производства позиций;
- Оперативные сроки поставки под заказ (от 5 рабочих дней);
- Экспресс доставка в любую точку России;
- Техническая поддержка проекта, помощь в подборе аналогов, поставка прототипов;
- Система менеджмента качества сертифицирована по Международному стандарту ISO 9001;
- Лицензия ФСБ на осуществление работ с использованием сведений, составляющих государственную тайну;
- Поставка специализированных компонентов (Xilinx, Altera, Analog Devices, Intersil, Interpoint, Microsemi, Aeroflex, Peregrine, Syfer, Eurofarad, Texas Instrument, Miteq, Cobham, E2V, MA-COM, Hittite, Mini-Circuits,General Dynamics и др.);

Помимо этого, одним из направлений компании «ЭлектроПласт» является направление «Источники питания». Мы предлагаем Вам помощь Конструкторского отдела:

- Подбор оптимального решения, техническое обоснование при выборе компонента;
- Подбор аналогов;
- Консультации по применению компонента;
- Поставка образцов и прототипов;
- Техническая поддержка проекта;
- Защита от снятия компонента с производства.

Как с нами связаться

Телефон: 8 (812) 309 58 32 (многоканальный)
Факс: 8 (812) 320-02-42
Электронная почта: org@eplast1.ru
Адрес: 198099, г. Санкт-Петербург, ул. Калинина, дом 2, корпус 4, литера А.