# 3M™ Color Coded Flat Cable

.050" 28 AWG Stranded, PVC

3302 Series

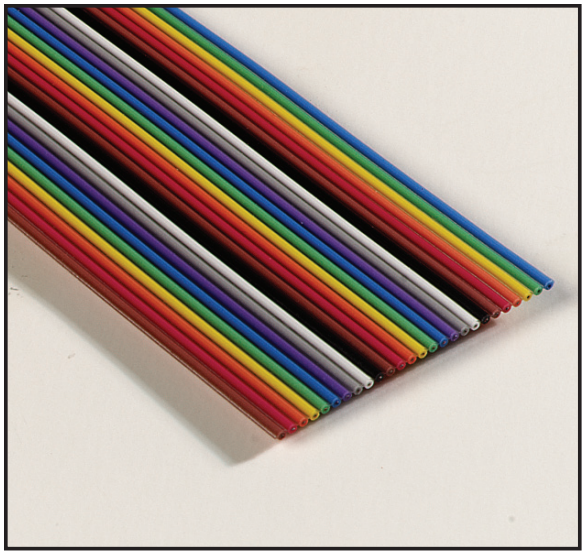

- 28 AWG wire on .050 inch centers permits mass termination to a broad line of IDC connectors
- Stranded wire provides flexibility and extended product life
- Zippable for branching or discrete termination
- Color coded for wire identification
- RoHS Compliant. See the Regulatory Information Appendix (RIA) in the "RoHS compliance" section of www.3Mconnectors.com for compliance information (RIA E1 & C1 apply)

Date Modified: May 1, 2012

TS-0123-C
Sheet 1 of 2

## Physical

**Insulation:**

Material: Polyvinyl Chloride (PVC)

Color: 10 Color Repeat, Clear Carrier

**Marking:**

Standard: None

Canadian Option: AWM 20462 105C 300V VW1 3M NU C AWM IA 80C 150V FT1 EU <50V

**Conductors:** 28 AWG, 7 × 36 AWG [ 7 × Ø 0.127 ] Tinned Stranded Copper

## Electrical

**Voltage Rating:** USA: 300V Canada: 150V EU: <50V

**Insulation Resistance:** > $1 \times 10^9$ Ω/10 ft. [ 3 m ]

**Characteristic Impedance:** **Unbalanced**
105 Ω

**Capacitance:** 14.1 pF/ft [ 46.3 pF/m ]

**Inductance:** 0.15 µH/ft [ 0.49 µH/m ]

**Propagation Delay:** 1.47 ns/ft [ 4.82 ns/m ]

**Velocity of Propagation:** 69%

Note: Unbalanced is measured between ground-signal-ground conductors.

## Environmental

**Temperature Rating:** USA: -20°C to +105°C Canada: -20°C to +80°C

**Flammability Rating:** USA: VW-1 Canada: FT1

UL File No.: E42769, Style No: 20462



3M is a trademark of 3M Company.

# 3M™ Color Coded Flat Cable

.050" 28 AWG Stranded, PVC

3302 Series

(OPTIONAL)

| Number of Conductors | 3M Part Number | Dimension A | Dimension B |
|---|---|---|---|
| 09 | 3302/09 | 0.450 ± .015 [ 11.43 ] | 0.400 ± .010 [ 10.18 ] |
| 10 | 3302/10 | 0.500 ± .015 [ 12.70 ] | 0.450 ± .010 [ 11.43 ] |
| 14 | 3302/14 | 0.700 ± .015 [ 17.78 ] | 0.650 ± .010 [ 16.51 ] |
| 15 | 3302/15 | 0.750 ± .015 [ 19.05 ] | 0.700 ± .010 [ 17.78 ] |
| 16 | 3302/16 | 0.800 ± .020 [ 20.32 ] | 0.750 ± .015 [ 19.05 ] |
| 18 | 3302/18 | 0.900 ± .020 [ 22.86 ] | 0.850 ± .015 [ 21.59 ] |
| 20 | 3302/20 | 1.000 ± .020 [ 25.40 ] | 0.950 ± .015 [ 24.13 ] |
| 24 | 3302/24 | 1.200 ± .020 [ 30.48 ] | 1.150 ± .015 [ 29.21 ] |
| 25 | 3302/25 | 1.250 ± .020 [ 31.75 ] | 1.200 ± .015 [ 30.48 ] |
| 26 | 3302/26 | 1.300 ± .020 [ 33.02 ] | 1.250 ± .015 [ 31.75 ] |
| 30 | 3302/30 | 1.500 ± .025 [ 38.10 ] | 1.450 ± .020 [ 36.83 ] |
| 34 | 3302/34 | 1.700 ± .025 [ 43.18 ] | 1.650 ± .020 [ 41.91 ] |
| 36 | 3302/36 | 1.800 ± .025 [ 45.72 ] | 1.750 ± .020 [ 44.45 ] |
| 37 | 3302/37 | 1.850 ± .025 [ 46.99 ] | 1.800 ± .020 [ 45.72 ] |
| 40 | 3302/40 | 2.000 ± .025 [ 50.80 ] | 1.950 ± .020 [ 49.53 ] |
| 50 | 3302/50 | 2.500 ± .025 [ 63.50 ] | 2.450 ± .020 [ 62.23 ] |
| 60 | 3302/60 | 3.000 ± .025 [ 76.20 ] | 2.950 ± .020 [ 74.93 ] |
| 64 | 3302/64 | 3.200 ± .025 [ 81.28 ] | 3.150 ± .020 [ 80.01 ] |

Inch
[mm]

| Tolerance Unless Noted | | | |
|---|---|---|---|
| | .0 | .00 | .000 |
| Inch | ±.1 | ±.01 | ±.005 |

[ ] Dimensions for Reference Only

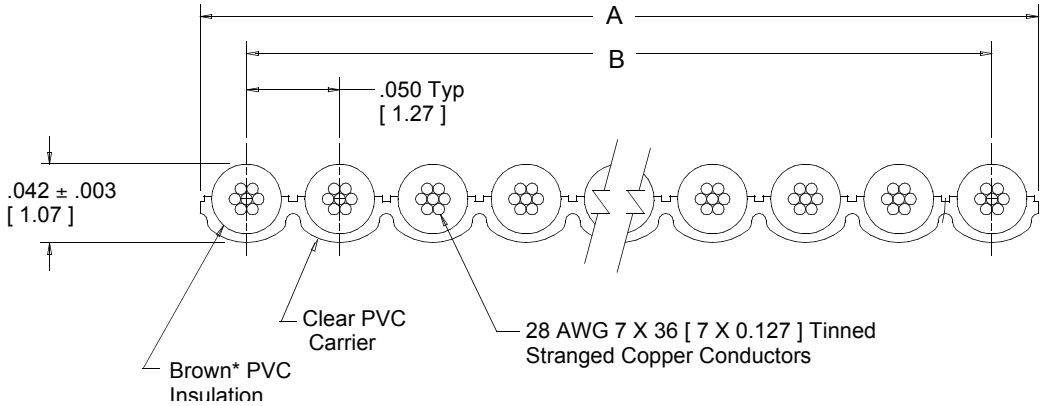


* 10 Color Repeat
Brown
Red
Orange
Yellow
Green
Blue
Violet
Gray
White
Black

## Ordering Information

**3302/XX XXC**

Blank = Standard
C = Canadian Certified Version

Number of Conductors
(See Table)

Blank = Standard
SF = Splice Free

Note:
Available in standard lengths of 100 feet or 300 feet per roll, please specify when ordering..

TS-0123-C
Sheet 2 of 2

**Important Notice**

All statements, technical information, and recommendations related to 3M's products are based on information believed to be reliable, but the accuracy or completeness is not guaranteed. Before using this product, you must evaluate it and determine if it is suitable for your intended application. You assume all risks and liability associated with such use. Any statements related to the product which are not contained in 3M's current publications, or any contrary statements contained on your purchase order shall have no force or effect unless expressly agreed upon, in writing, by an authorized officer of 3M.

**Warranty; Limited Remedy; Limited Liability.**

This product will be free from defects in material and manufacture for a period of one (1) year from the time of purchase. **3M MAKES NO OTHER WARRANTIES INCLUDING, BUT NOT LIMITED TO, ANY IMPLIED WARRANTY OF MERCHANTABILITY OR FITNESS FOR A PARTICULAR PURPOSE.** If this product is defective within the warranty period stated above, your exclusive remedy shall be, at 3M's option, to replace or repair the 3M product or refund the purchase price of the 3M product. **Except where prohibited by law, 3M will not be liable for any indirect, special, incidental or consequential loss or damage arising from this 3M product, regardless of the legal theory asserted.**

**3M Electronics Solutions Division**
6801 River Place Blvd.
Austin, TX 78726-9000
U.S.A.
1-800-225-5373
www.3Mconnectors.com

3M is a trademark of 3M Company.

Please recycle. Printed in USA.
© 3M 2012. All rights reserved.
RIA-2217B-E

Компания «ЭлектроПласт» предлагает заключение долгосрочных отношений при поставках импортных электронных компонентов на взаимовыгодных условиях!

Наши преимущества:

- Оперативные поставки широкого спектра электронных компонентов отечественного и импортного производства напрямую от производителей и с крупнейших мировых складов;
- Поставка более 17-ти миллионов наименований электронных компонентов;
- Поставка сложных, дефицитных, либо снятых с производства позиций;
- Оперативные сроки поставки под заказ (от 5 рабочих дней);
- Экспресс доставка в любую точку России;
- Техническая поддержка проекта, помощь в подборе аналогов, поставка прототипов;
- Система менеджмента качества сертифицирована по Международному стандарту ISO 9001;
- Лицензия ФСБ на осуществление работ с использованием сведений, составляющих государственную тайну;
- Поставка специализированных компонентов (Xilinx, Altera, Analog Devices, Intersil, Interpoint, Microsemi, Aeroflex, Peregrine, Syfer, Eurofarad, Texas Instrument, Miteq, Cobham, E2V, MA-COM, Hittite, Mini-Circuits,General Dynamics и др.);

Помимо этого, одним из направлений компании «ЭлектроПласт» является направление «Источники питания». Мы предлагаем Вам помощь Конструкторского отдела:

- Подбор оптимального решения, техническое обоснование при выборе компонента;
- Подбор аналогов;
- Консультации по применению компонента;
- Поставка образцов и прототипов;
- Техническая поддержка проекта;
- Защита от снятия компонента с производства.

**Как с нами связаться**

**Телефон:** 8 (812) 309 58 32 (многоканальный)
**Факс:** 8 (812) 320-02-42
**Электронная почта:** org@eplast1.ru
**Адрес:** 198099, г. Санкт-Петербург, ул. Калинина, дом 2, корпус 4, литера А.