# Resistors

## Low Resistance Metal Alloy Resistor

### LRMA Series

- Resistance range 0.5mΩ to 500mΩ
- High temperature operation to 170°C
- Low thermal EMF version
- High power version
- Current sensing for power electronics
- RoHS compliant & halogen free
- AEC-Q200 qualified

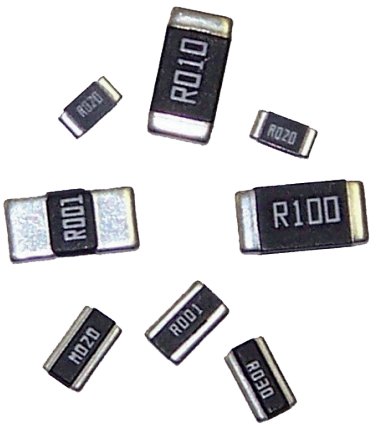


All parts are Pb-free and comply with EU Directive 2011/65/EU amended by (EU) 2015/863 (RoHS3)

## Electrical Data

| LRMA Version | | T (Standard) | | P (Power) |
|---|---|---|---|---|
| Size | | 2010 | 2512 | 2512 |
| Power rating @70°C | W | 1.5 | ≤R01: 2, >R01: 1 | ≤R10: 3, >R10: 2 |
| Overload rating (5s) | W | 7.5 | ≤R01: 10, >R01: 5 | ≤R10: 15, >R10: 10 |
| Resistance range | mΩ | 5 to 100 | 1 to 100 | 0.5 to 500 |
| Standard values [1] | mΩ | 5, 6, 10, 15, 20, 50, 100 | 1, 1.5, 2, 3, 3.5, 4, 5, 6, 7, 8, 10, 11, 12, 15, 18, 20, 25, 30, 33, 35, 40, 50, 100 | 0.5, 0.75, 1, 1.1, 1.5, 2, 2.5, 3, 4, 5, 6, 6.8, 7, 8, 9, 10, 11, 12, 15, 18, 20, 22, 25, 27, 30, 33, 39, 40, 45, 47, 50, 57, 60, 68, 70, 75, 80, 85, 90,100, 120, 130, 140, 150, 180, 200, 220, 240, 250, 270, 280, 300, 330, 390, 400, 500 |
| Resistance tolerance[1] | % | 1, 5 | | |
| TCR (25 to 125°C) | ppm/°C | ≥R01: ±75 | >R001 & <R01: ±100, ≤R001: ±275 | <R001: ±200 ≥R001: ±50 |
| Ambient temperature | °C | -55 to 170 | | |
| Insulation resistance | MΩ | >100 | | |
| Element alloy | | Cu-Ni | | Cu-Ni / Mn-Cu |

| LRMA Version | | M (Low thermal EMF) | | | N (Inverse) | | |
|---|---|---|---|---|---|---|---|
| Size | | 0805 | 1206 | 2512 | 0612 | 0815 | 1225 |
| Power rating @70°C | W | 0.5 | 1 | ≤R01: 2, >R01: 1 | 1 [2] | | 3 |
| Overload rating (5s) | W | 2.5 | 5 | ≤R01: 10, >R01: 5 | 5 | | 15 |
| Resistance range | mΩ | 2 to 25 | 1 to 50 | 0.5 to 60 | 1 to 3 | 3 to 30 | 2 to 40 |
| Standard values [1] | mΩ | 1, 2, 3, 5, 6, 8, 9,10, 20, 25 | 1, 1.2, 2, 3, 4, 5, 6, 7, 8, 9, 10, 12, 14, 15, 18, 20, 22, 25, 30, 39, 40, 50 | 0.5, 0.75, 1, 1.5, 2, 3.5, 5, 10, 20, 25, 30, 40, 50, 60 | 1, 3 | 3, 4, 5, 10, 15, 20, 25, 30 | 2,3,4,5,10,15, 20,25,30,40 |
| Resistance tolerance[1] | % | 1, 5 | | | | | |
| TCR (25 to 125°C) | ppm/°C | ±100 | ±50 | ≥R01: ±75, >R001 & <R01: ±100 ≤R001: ±275 | ±100 | | |
| Ambient temperature | | -55 to 170°C | | | | | |
| Insulation resistance | MΩ | >100 | | | | | |
| Element alloy | | Mn-Cu | | | Mn-Cu / Cu-Ni | | |

Notes: 1. Non-standard values and tighter tolerances may be available for high volume requirements. 2. Requires 300mm$^2$ copper pad & trace area

## Physical Data (All dimensions in mm and nominal weight in mg)

| Size | L | W | C | t | Wt |
|---|---|---|---|---|---|
| **0805** | 2.0 ±0.1 | 1.25 ±0.1 | 0.4 ±0.2 | 0.6 ±0.2 | 5.5 |
| **0805** ≤R002 | | | 0.6 ±0.2 | | |
| **1206** <R002 | 3.2 ±0.2 | 1.6 ±0.2 | 1.1 ±0.3 | 0.75 ±0.2 | 18.3 |
| **1206** ≥R002 | | | 0.5 ±0.3 | 0.6 ±0.2 | |
| **0612** | 1.7±0.2 | 3.2±0.2 | 0.4±0.2 | 0.6 ±0.2 | 12.9 |
| **0815** | 2.1 ±0.25 | 3.75 ±0.3 | 0.5 ±0.2 | 0.7 ±0.2 | 14.1 |
| **2010** | 5.0 ±0.2 | 2.5 ±0.2 | 0.6 ±0.3 | 0.6 ±0.2 | 35.6 |
| **2512** <R001 | 6.4 ±0.2 | 3.2 ±0.2 | 2.6 ±0.2 | 0.65 ±0.25 | 57 to 63 |
| **2512** ≥R001 & ≤R003[1] | | | 2.0 ±0.2 | | |
| **2512** >R003[1] | | | 0.9 ±0.2 | | |
| **1225** | 3.2 ±0.3 | 6.4 ±0.3 | 0.5 ±0.2 | 0.9 ±0.2 | 70 |

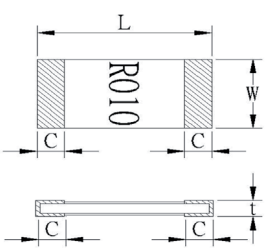


Note 1 - This applies to LRMAT2512 and LRMAM2512. For LRMAP2512 this threshold is R004

**General Note**

TT Electronics reserves the right to make changes in product specification without notice or liability.
All information is subject to TT Electronics' own data and is considered accurate at time of going to print.

BI Technologies IRC Welwyn

www.ttelectronics.com/resistors

© TT Electronics plc

## Construction

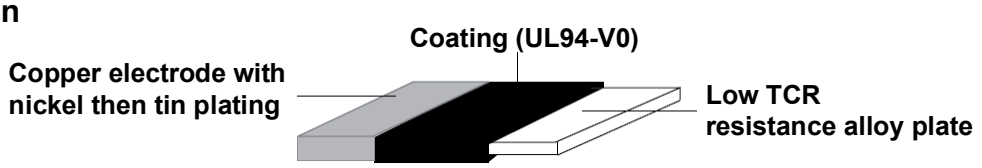


## Marking

The components are marked with ohmic value, e.g. “R002” = 2mΩ, “R010” = 10 mΩ.
Due to space restrictions, for LRMAM1206-R001, "01" = 1mΩ is used, and for LRMAM0805, “2” = 2mΩ, “010” = 10 mΩ are used.

## Solvent Resistance

The component is resistant to all normal industrial cleaning solvents suitable for printed circuits.

# Performance Data

| | | Maximum (%) | Typical (%) |
|---|---|---|---|
| Load at rated power (cyclic load, 1000 hours at 70°C) | ±ΔR | 0805: 1.5 Others 1 | 0.3 |
| Short term overload (5 x rated power for 5s) | ±ΔR | 0.5 | 0.15 |
| Humidity (1000 hours, 85°C, 85%RH) | ±ΔR | 0805: 1 Others 0.5 | 0.15 |
| Temperature cycle (-40 to +125°C, 1000 cycles, 15 minute dwell) | ±ΔR | 0805: 1 Others 0.5 | 0.15 |
| Resistance to solder heat (260°C ±5°C for 20s ±1s) | ±ΔR | 0.5 | 0.3 |
| Solderability (245°C ±5°C for 2s ±0.5s) | | >95% coverage | |
| Dry heat (1000 hours at 170°C) | ±ΔR | 0805: 1.5 Others 0.5 | 0.3 |
| Low temperature storage (1000 hours at -55°C) | ±ΔR | 0.5 | 0.15 |
| Substrate bending (board 1.6mm, fulcrum spacing 90mm, deflection 2mm) | ±ΔR | 0805: 1 Others 0.5 | 0.3 |
| Insulation resistance (1 minute @ 100Vdc) | | >100M | |

## Thermal Performance & Mounting

**Temperature Derating**

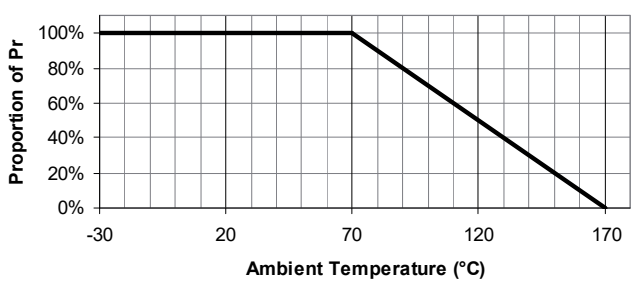


**Typical Temperature Rise**

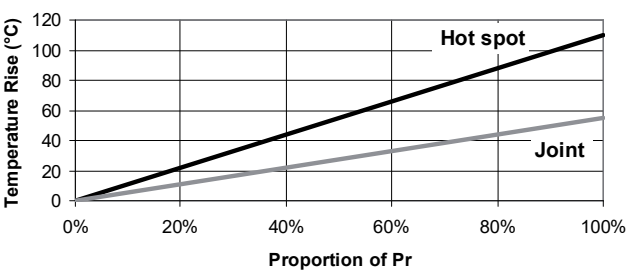


**Reference Pad Dimensions (mm)**

| Size | a | b | L |
|---|---|---|---|
| **0612** | 3.8 | 0.7 | 0.7 |
| **0805** | 1.4 | 1.15 | 1.2 |
| **1206** <R002 | 1.8 | 2.3 | 1.0 |
| **1206** ≥R002 | 1.8 | 1.7 | 1.6 |
| **0815** | 7.9 | 1.5 | 0.9 |
| **2010** | 3.4 | 1.5 | 3.5 |
| **2512** ≤R003[1] | 4.0 | 3.1 | 1.3 |
| **2512** >R003[1] | 4.0 | 2.1 | 4.1 |
| **1225** | 7.0 | 1.0 | 2.3 |

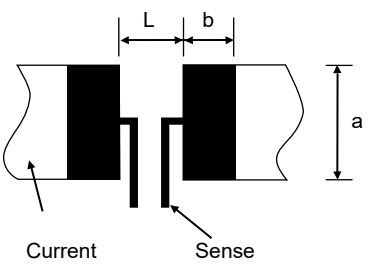


The temperature rise shown is highly dependent on mounting conditions. Reference conditions assume 20µ copper with thermal vias to multiple layers.
The self-heating in the current tracks should be kept negligible, or allowed for by temperature derating.

Note 1 - This applies to LRMAT2512 and LRMAM2512. For LRMAP2512 this threshold is R004

Standard 4-terminal probe pitches for measuring unmounted parts are 2.8 x 1.7mm (0612), 0.4 x 1.83mm (0805), 0.4 x 2.8mm (1206), 1.2 x 4.5mm (2010), 1.5 x 5.8mm (2512), and 5.4 x 3.4mm (1225). All probe location tolerances ±0.02mm.

**General Note**
TT Electronics reserves the right to make changes in product specification without notice or liability.
All information is subject to TT Electronics’ own data and is considered accurate at time of going to print.



© TT Electronics plc

## Packaging

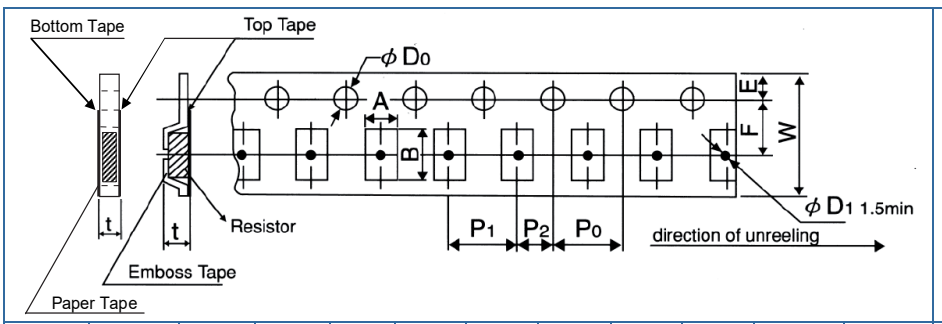


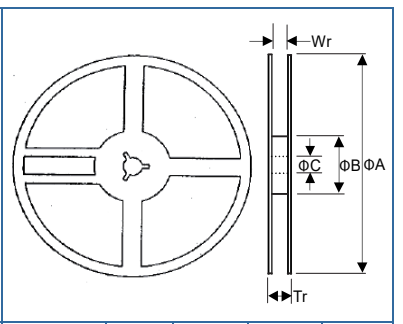


| Size | Tape | A | B | W | F | E | $P_1$ | $P_2$ | $P_0$ | Φ$D_0$ | t | ΦA | ΦB | ΦC | Wr | Tr |
|---|---|---|---|---|---|---|---|---|---|---|---|---|---|---|---|---|
| **0805** | Paper | 1.6 ±0.15 | 2.4 ±0.2 | 8.0 ±0.2 | 3.5 ±0.05 | 1.75 ±0.1 | 4.0 ±0.1 | 2.0 ±0.1 | 4.0 ±0.1 | 1.5 +0.1/-0 | 0.84 ±0.1 | 178 ± 2 | 60 ±1 | 13 ±1 | 9 ±1 | 11.4 ±1 |
| **0612, 1206** | Paper | 2.0 ±0.15 | 3.6 ±0.2 | 8.0 ±0.2 | 3.5 ±0.05 | 1.75 ±0.1 | 4.0 ±0.1 | 2.0 ±0.05 | 4.0 ±0.1 | 1.5 +0.1/-0 | 0.84 ±0.1 | 178 ± 2 | 60 ±1 | 13 ±1 | 9 ±1 | 11.5 ±1 |
| **0815** | Emboss | 2.6 ±0.2 | 4.5 ±0.2 | 12 ±0.2 | 5.5 ±0.1 | 1.75 ±0.1 | 4.0 +-0.1 | 2.0 ±0.2 | 4.0 ±0.1 | 1.55 ±0.05 | 1.1 ±0.1 | 178 ± 2 | 60 ±1 | 13 ±1 | 13 ±1 | 15.4 ±2 |
| **2010** | Emboss | 2.8 ±0.2 | 5.3 ±0.2 | 12 ±0.05 | 5.5 ±0.05 | 1.75 ±0.1 | 4.0 ±0.1 | 2.0 ±0.05 | 4.0 ±0.05 | 1.5 +0.1/-0 | 0.85 ±0.15 | 178 ± 2 | 60 ±1 | 13 ±1 | 13 ±1 | 15.4 ±2 |
| **2512 1225** | Emboss | 3.6 ±0.2 | 6.9 ±0.2 | 12 ±0.2 | 5.5 ±0.05 | 1.75 ±0.1 | 4.0 ±0.1 | 2.0 ±0.05 | 4.0 ±0.05 | 1.5 +0.1/-0 | 0.85 ±0.15 | 178 ± 2 | 60 ±1 | 13 ±1 | 13 ±1 | 15.4 ±2 |

## Storage

**Conditions:** 5°C to 35°C and 40% to 75%RH
**Shelf life:** 2 years from manufacture

## Processing

LRMA series resistors are suitable for both wave and IR reflow soldering. The recommended reflow profile for Pb-free SAC305 alloy (Sn 96.5%, Ag 3%, Cu 0.5%) soldering is as follows:

**Pre-heat:** 60s to 120s at 150°C to 180°C
**Soldering:** 20s to 40s at ≥230°C
**Peak:** 5s at 255°C to 260°C

# Ordering Procedure

**Example: LRMAM2512-R01FT4** (LRMA2512, low thermal EMF, 10 milliohms ±1%, Pb-free)

| L | R | M | A | M | 2 | 5 | 1 | 2 | -[1] | R | 0 | 1 | | | | F | T | 4 |
|---|---|---|---|---|---|---|---|---|---|---|---|---|---|---|---|---|---|---|
| 1 | | | | 2 | 3 | | | | | 4 | | | | | | 5 | 6 | |

| 1 Type | 2 Version | | 3 Size | 4 Value | 5 Tolerance | 6 Packing | | |
|---|---|---|---|---|---|---|---|---|
| LRMA | T | Standard | 0612 | 3 to 6 characters | F = ±1% | Tape & reel | | |
| | P | Power | 0805 | | J = ±5% | T5 | 0612, 0805, 1206 | 5000/reel |
| | M | Low thermal EMF | 1206 | R = ohms | | T4 | 0815, 2010, 2512, 1225 | 4000/reel |
| | N | Inverse | 0815 | | | | | |
| | | | 2010 | | | | | |
| | | | 2512 | | | | | |
| | | | 1225 | | | | | |

Note 1: For values which require all 6 characters, e.g. R00075, the hyphen is omitted.

**General Note**
TT Electronics reserves the right to make changes in product specification without notice or liability.
All information is subject to TT Electronics' own data and is considered accurate at time of going to print.



© TT Electronics plc

Компания «ЭлектроПласт» предлагает заключение долгосрочных отношений при поставках импортных электронных компонентов на взаимовыгодных условиях!

Наши преимущества:

- Оперативные поставки широкого спектра электронных компонентов отечественного и импортного производства напрямую от производителей и с крупнейших мировых складов;
- Поставка более 17-ти миллионов наименований электронных компонентов;
- Поставка сложных, дефицитных, либо снятых с производства позиций;
- Оперативные сроки поставки под заказ (от 5 рабочих дней);
- Экспресс доставка в любую точку России;
- Техническая поддержка проекта, помощь в подборе аналогов, поставка прототипов;
- Система менеджмента качества сертифицирована по Международному стандарту ISO 9001;
- Лицензия ФСБ на осуществление работ с использованием сведений, составляющих государственную тайну;
- Поставка специализированных компонентов (Xilinx, Altera, Analog Devices, Intersil, Interpoint, Microsemi, Aeroflex, Peregrine, Syfer, Eurofarad, Texas Instrument, Miteq, Cobham, E2V, MA-COM, Hittite, Mini-Circuits,General Dynamics и др.);

Помимо этого, одним из направлений компании «ЭлектроПласт» является направление «Источники питания». Мы предлагаем Вам помощь Конструкторского отдела:

- Подбор оптимального решения, техническое обоснование при выборе компонента;
- Подбор аналогов;
- Консультации по применению компонента;
- Поставка образцов и прототипов;
- Техническая поддержка проекта;
- Защита от снятия компонента с производства.

**Как с нами связаться**

**Телефон:** 8 (812) 309 58 32 (многоканальный)
**Факс:** 8 (812) 320-02-42
**Электронная почта:** org@eplast1.ru
**Адрес:** 198099, г. Санкт-Петербург, ул. Калинина, дом 2, корпус 4, литера А.