Introduction

Designed in accordance with EIA standard RS-310, Vector subracks and modules offer versatility within a 19" rackmount format. All racks are adjustable in both height and depth, offering standard product solutions for standard and custom requirements.

All Subrack sizes are compatible with Vector prototyping boards (see Vectorbord section), and can accommodate other sizes as well. Several card guide types (metal or plastic, snap-in, rivet, or screw-down) are available.

Cages

VectorPak® Subrack and Module Subrack Types by Part Number Stem:

CCK - Card Cage frame kit. Kits with no card guides use 'F' in number (e.g., CCK13F/90). Other kits have 21 pair of guides included: 'S'= plastic snap-in type e.g., CCK13S/90; 'M' or 'P'= metal or plastic, fastened with hardware. Guide spacing is .25".

CCA - Same as CCK version, but all are ***assembled with guides***.

CMA - Assembled **Module Subrack** for EFP modules. Modules available separately.

CCM - Assembled rack for **Card Mount Modules** (CM type). Modules available separately.

For Rack Accessories see page 41A
For Desktop outer enclosure, see page 42

New Item: CCK19F/90 (For max 11.5" x 13.5" cards)

Subrack Kits (CCK)

Assembled Subracks with Continuous Guide Plate

Assembled Module Subracks (CMA)

Assembled Subracks with Card Guides (CCA)

Assembled Card Mount Subracks (CCM)

CCK - 13 - S - /90

Model Type
CCK - Kit only with snap-in card guides
CCA - Factory assembled version of CCK with snap-in card guides
CCM - Factory assembled card mount cage with snap-in card guides
CMA - Assembled module cage with module guides

Series Number (Max. Card Size)
12 - 3U (5.25") X 19" x 9" (4.5" x 4.5") 21 pair Card Guides included
13 - 3U (5.25") X 19" X 9" (4.5" x 6.5") 21 pair Card Guides included
14 - 3U (5.25") X 19" X 12" (4.5" x 9.6")
16 - 3U (5.25") X 19" X 15.75" (4.5" x 13.5")
15 - 4U (7.00") X 19" X 12" (6.25" x 9.6")
20 - 4U (7.00") X 19" X 15.75" (6.25" x 13.5")
17 - 5U (8.75") X 19" X 12" (8.00" x 11.0")
18 - 6U (10.50") X 19" X 15.75" (9.75" x 13.5")
19 - 7U (12.25") X 19" X 15.75" (11.5" x 13.5")
100 -7U (12.25") X 19" X 9.00" (11.5" x 7")

Note: /90 denotes side walls with .200" slot width
On CCA, K frames only also denotes snap-in version

CCK Type
F - Frame only, snap-in plastic, metal or plastic screw-down card guides available separately
C - Continuous guide plate, assembled cage only
S - Sanp-in guides included
M - Screw-in Aluminum card guides
P - Screw-in plastic card guides

CMA 13 or 14 - XX/90
16 - Designed for 1.6" wide EFP modules
20 - Designed for 2.0" wide EFP modules
30 - Designed for 3.0" wide EFP modules

For Front Door Panels and Covers see page 41A

Cardmount Subracks

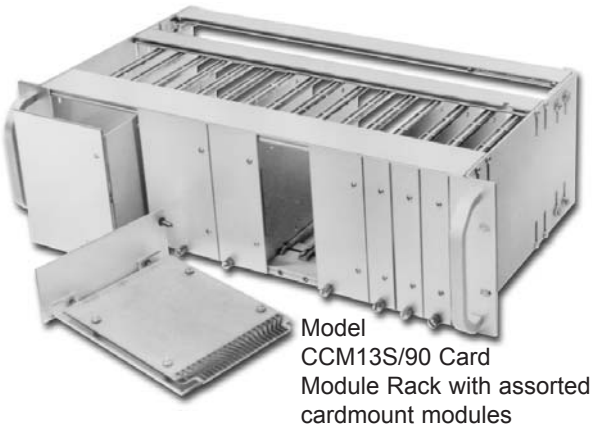

Model CCM13S/90 Card Module Rack with assorted cardmount modules

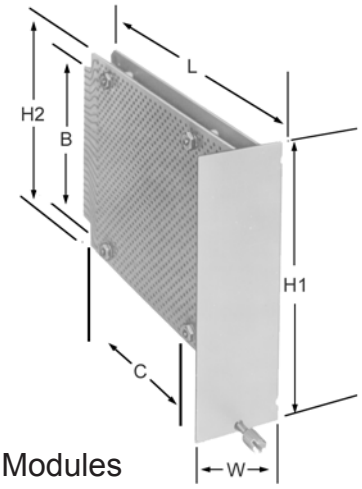

- Accepts CM45A65 Card Mount Modules
- Card guide positions are variable at .25” increments
- Assembled module rack - plastic snap-in install on 1” centers
- Different width modules may be inserted interchangeable without guide changes
- Card mount modules (CM Series) with 1” to 4” widths
- For 3U and 4U applications
- Adjustable rear struts for connection of backplanes (struts available separately)
- .062” thick aluminum plates are inserted into guide; PC Card is attached firmly to plate
- Front panels on card mount may be removed for custom punching, plating and printing
- Modules may be secured by thumb screws (SC10-3A, 10-32 included)
- For Desktop outer enclosure, see page 42

Card Mount Modules

Part No.	Height		Width	Length			Module	Card
	H1	H2	W	L	B	C	Rack	Guide
CM45A65-1	5.25”	4.5”	1.0”	6.57”	3.8”	3.6”	CCM13S	CG2-65
CM45A65-2	5.25”	4.5”	2.0”	6.57”	3.8”	3.6”	CCM13S	CG2-65
CM45A65-4	5.25”	4.5”	4.0”	6.57”	3.8”	3.6”	CCM13S	CG2-65
CM45B95-1	5.25”	4.5”	1.0”	9.57”	3.8”	6.6”	CCM14S	CG2-95
CM45B95-2	5.25”	4.5”	2.0”	9.57”	3.8”	6.6”	CCM14S	CG2-95
CM45B95-4	5.25”	4.5”	4.0”	9.57”	3.8”	3.6”	CCM14S	CG2-95
CM62F95-1	7.0”	6.25”	1.0”	9.57”	5.5”	6.6”	CCM15S	CG2-95
CM62F95-2	7.0”	6.25”	2.0”	9.57”	5.5”	6.6”	CCM15S	CG2-95
CM62F95-4	7.0”	6.25”	4.0”	9.57”	5.5”	6.6”	CCM15S	CG2-95
CM90F95-1	10.5”	9.00”	1.0”	9.57”	7.6”	6.6”	CCM18S	CG2-95
CM90F95-2	10.5”	9.00”	2.0”	9.57”	7.6”	6.6”	CCM18S	CG2-95
CM90F95-4	10.5”	9.00”	4.0”	9.57”	7.6”	6.6”	CCM18S	CG2-95

Card Guides

Free Standing Connector Mounted Card Guides

Secure connection, rugged support of 0.062” thick, free standing circuit boards. For applications in which space is at a premium. Several sizes and styles available. Aluminum alloy construction. Mounting hardware included (HD55 Hardware Kit)

Part No.	Use With Connector	A	B	C	D	For Use With
BR27D	R644	.60”	2.96”	.47”	.25”	4.5” wide Plugbords with centered contacts, such as Vector 3677, 3682 and 3662 series

Typical BR27 mounting

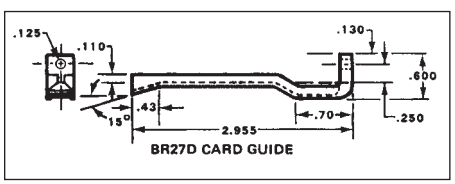

BR27D CARD GUIDE

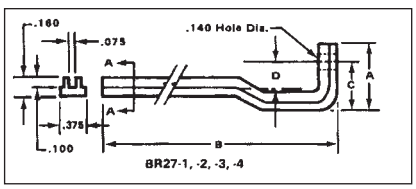

BR27-1, -2, -3, -4

(Ordering Table see page 37)

Module Subracks

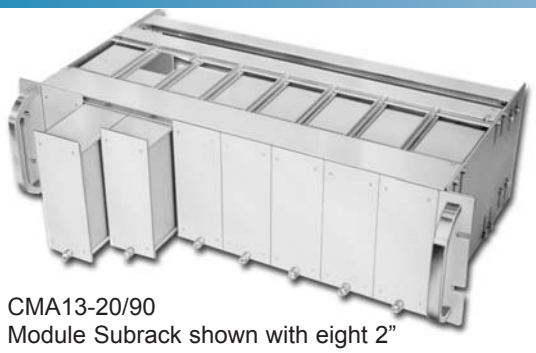

CMA13-20/90
Module Subrack shown with eight 2" wide EFP Modules (sold separately)

- 1.6", 2.0" and 3.0" evenly spaced modules are accepted
- Side Panels -double screw attachment to wide TSW \ (1.75") metal strut
- Rear Struts-adjustable in width and height-BR16-1 bracket
- Special aluminum extruded case guides and spacers provide secure mounting for modules
- Standard 19" width. Other widths available by special order.
- Filler panels available where mixing widths creates gaps
- Aluminum construction
- Paint or color anodize options available

CMA Module Racks

These cages provide attractive, sturdy, and mechanically excellent housing to enclose electronic assemblies.

These units have the benefits and features of custom enclosures without the expense.

EFP modules feature aluminum extruded sides to accept PC cards. Extended front panels on modules allow thumb screw locking of module to subrack for easy insertion and extraction. The extended front panel also provides an attractive appearance.

Side panels fasten to sturdy Vector TSW model (1.75" wide) Struts with two screws. Subrack models accept widths of 1.6", 2.0", and 3.0" EFP modules; 4.5" module optional. Rear struts are adjustable in width and height.

(Ordering Table see page 37)

EFP Modules

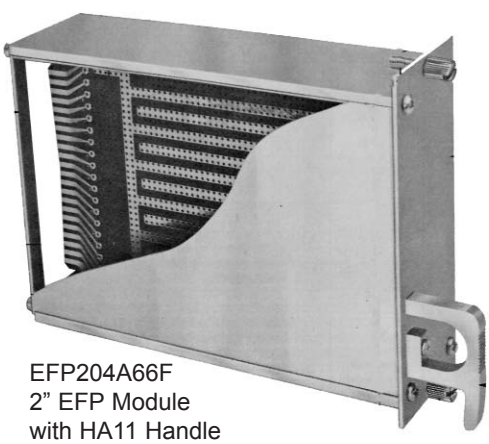

EFP204A66F
2" EFP Module
with HA11 Handle

- Extended front panels provide thumb screw mounting & flush fit from module to module & with strut line.
- Modules provide shielding; H.F. shielding optional
- Front panels may be customized -cutouts, printing & color.
- All covers have locking detent; slides out of groove when released
- Supplied in Kit form
- Modules with 6.5" depth accept 4.5" x 6.5" cards
- Modules with 9.7" depth accept 4.5" x 9.6" cards

For Side Panels & Mounting Hardware see page 41B

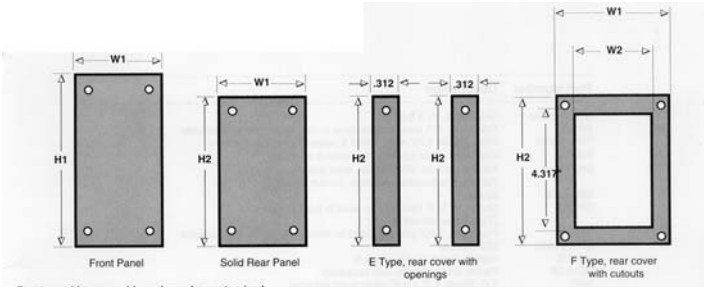

Part No.	Kit Type F	L	W1	W2	H1	H2	Full Rear Panel Piece Parts: Front Panel#	Rear Cover	F Cutouts
EFP164A66	EFP164A66F	6.5"	1.65"	1.31"	5.22"	4.62	FP16-52	BP13-4	BP13-4F
EFP164A97	EFP164A97F	9.6"	1.65"	1.31"	5.22"	4.62"	FP16-52	BP13-4	BP13-4F
EFP204A66	EFP204A66F	6.5"	2.05"	1.71"	5.22"	4.62"	FP2A52	BP17-4	BP17-4F
EFP204A97	EFP204A97F	9.6"	2.05"	1.71"	5.22"	4.62"	FP2A52	BP17-4	BP17-4F
EFP304A66	EFP304A66F	6.5"	3.05"	2.71"	5.22"	4.62"	FP3A52	BP27-4	BP27-4F
EFP304A97	EFP304A97F	9.6"	3.05"	2.71"	5.22"	4.62"	FP3A52	BP27-4	BP27-4F
EFP454A66	EFP454A66F	6.5"	4.55"	4.21"	5.22"	4.62"	FP3A52	BP27-4	BP27-4F
EFP454A97	EFP454A97F	9.6"	4.55"	4.21"	5.22"	4.62"	FP45A52	BP42-4	BP42-4F

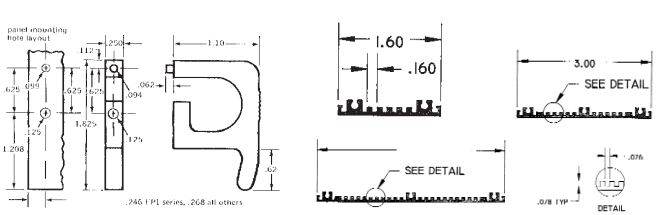

P/N HA11/2 Handle Pkg 2

11115 Vanowen St., North Hollywood, CA 91605 Phone (818) 985-8208
Toll-Free (800) 423-5659
Web site: http://www.vectorelect.com
VECTOR ELECTRONICS & TECHNOLOGY, INC.
A Fine Technology Group

Card Guides

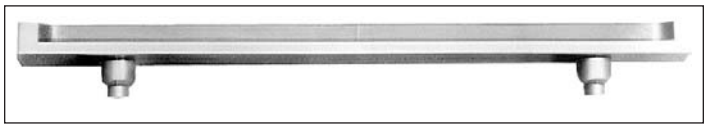

Tapered slot, snap-in card guides provide easy installation/removal

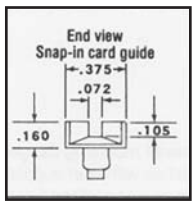

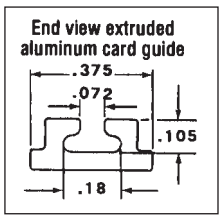

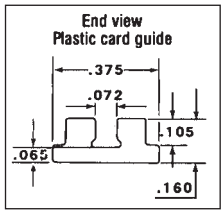

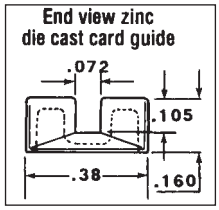

High quality card guides feature tapered slots for easy insertion. Snap-in nylon models provide easy installation and removal without tools, and can be positioned at 0.25" increments when used with Vector-Pak T-struts (TS169-6/90). Screw-mounted models (installation hardware included) are available in metal or plastic and provide variable positioning along entire length of strut. Holes for mounting guides to struts are based on center-to-center multiples of 0.75". All materials are flame retardant.

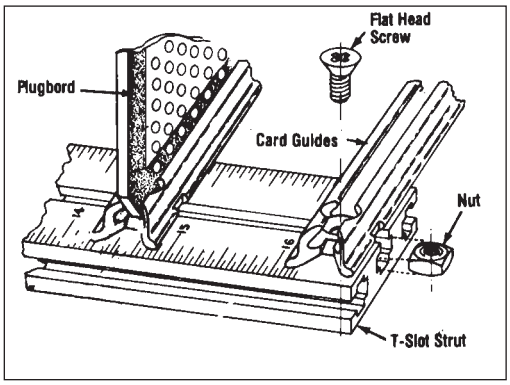

Metal or plastic screw down card guides attach with SC4-27/25 flat head screw and NT4-7PA square nut

Card Guide Ordering Table

Part No.	Type	Length	Centers	Card Length	Application
CG2-45P	Plastic, Screw	2.89"	2.25"	4.50"	Subrack series 12, 13, 14, 17, 18 & 100 and Vector P series sidewalls
CG2-45S	Nylon, Snap-in	3.17"	2.25"	4.50"	
CG2-50P	Plastic, Screw	4.36"	3.75"	5.00	
CG2-65M	Metal, Screw	5.42"	4.50"	6.50"	
CG2-65P	Plastic, Screw	5.42"	4.50"	6.50"	
CG2-65S	Nylon, Snap-in	5.42"	4.50"	6.50"	
CG2-80M	Metal, Screw	6.64"	6.00"	8.00"	
CG2-80P	Plastic, Screw	6.64"	6.00"	8.00"	Subrack series 14, 15, 17, 18 and 100 and Vector P series sidewalls ending in 119 or 156 CCA19
CG2-80S	Nylon, Snap-in	6.93"	6.00"	8.00"	
CG2-95M	Metal, Screw	8.14"	7.50"	9.50"	
CG2-95P	Plastic, Screw	8.14"	7.50"	9.50"	
CG2-95S	Nylon, Snap-in	8.43"	7.50"	9.50"	
CG2-135M	Metal, Screw	13.19"	12.55"	13.50"	

Packages of 12 ea. Screw-down types include installation hardware and are available in custom lengths on request.

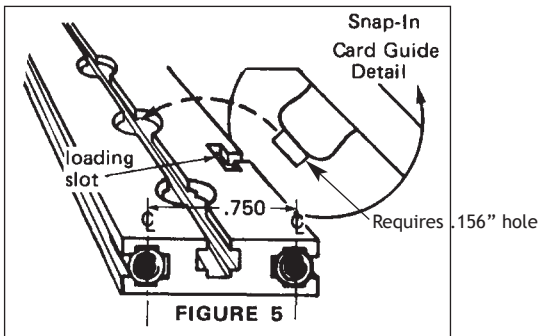

Snap-in Guide and TS169-6/90 Strut

Компания «ЭлектроПласт» предлагает заключение долгосрочных отношений при поставках импортных электронных компонентов на взаимовыгодных условиях!

Наши преимущества:

- Оперативные поставки широкого спектра электронных компонентов отечественного и импортного производства напрямую от производителей и с крупнейших мировых складов;
- Поставка более 17-ти миллионов наименований электронных компонентов;
- Поставка сложных, дефицитных, либо снятых с производства позиций;
- Оперативные сроки поставки под заказ (от 5 рабочих дней);
- Экспресс доставка в любую точку России;
- Техническая поддержка проекта, помощь в подборе аналогов, поставка прототипов;
- Система менеджмента качества сертифицирована по Международному стандарту ISO 9001;
- Лицензия ФСБ на осуществление работ с использованием сведений, составляющих государственную тайну;
- Поставка специализированных компонентов (Xilinx, Altera, Analog Devices, Intersil, Interpoint, Microsemi, Aeroflex, Peregrine, Syfer, Eurofarad, Texas Instrument, Miteq, Cobham, E2V, MA-COM, Hittite, Mini-Circuits,General Dynamics и др.);

Помимо этого, одним из направлений компании «ЭлектроПласт» является направление «Источники питания». Мы предлагаем Вам помощь Конструкторского отдела:

- Подбор оптимального решения, техническое обоснование при выборе компонента;
- Подбор аналогов;
- Консультации по применению компонента;
- Поставка образцов и прототипов;
- Техническая поддержка проекта;
- Защита от снятия компонента с производства.

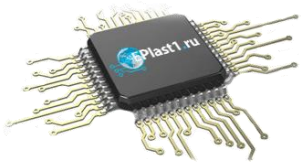

Как с нами связаться

Телефон: 8 (812) 309 58 32 (многоканальный)
Факс: 8 (812) 320-02-42
Электронная почта: org@eplast1.ru
Адрес: 198099, г. Санкт-Петербург, ул. Калинина, дом 2, корпус 4, литера А.