IXYS
INTEGRATED CIRCUITS DIVISION

M-980-02
3V/5V General Purpose Call Progress Tone Detector

Features

- Covers the 315Hz to 640Hz Range (Common Call Progress)
- Sensitivity to -38dBm
- Dynamic Range Over 38 dB
- 40ms Minimum Detect
- 8-Pin DIP or 16-Pin SOIC
- Single Supply CMOS (Low Power)
- Supply Range 2.8VDC to 5.5VDC
- Inexpensive 3.58MHz Time Base
- Low Power Consumption (≤15mW at 3V)

Applications

- Automatic Dialers
- Dialing Modems
- Traffic Measurement Equipment
- Test Equipment
- Service Evaluation
- Billing Systems

Pin Configuration

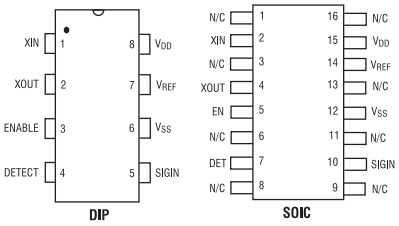

Description

The M-980-02 is an integrated circuit tone detector for general purpose use in automatic following of switched telephone calls. The circuit uses low-power CMOS techniques to provide the complete filtering and control required for this function. The basic timing of the M-980-02 is designed to permit operation with almost any progress tone system.

The use of integrated circuit techniques allows the M-980-02 to pack the complete frequency and amplitude portion of call progress following into a single 8- pin DIP or 16-pin SOIC. A 3.58 MHz crystal-controlled time base guarantees accuracy and repeatability. 3V/5V operation increases customer flexibility, improves reliability, and minimizes power consumption.

Ordering Information

Part	Description
M-980-02P	8-pin plastic DIP
M-980-02S	16-pin SOIC
M-980-02T	16-pin SOIC, Tape and Reel

Block Diagram

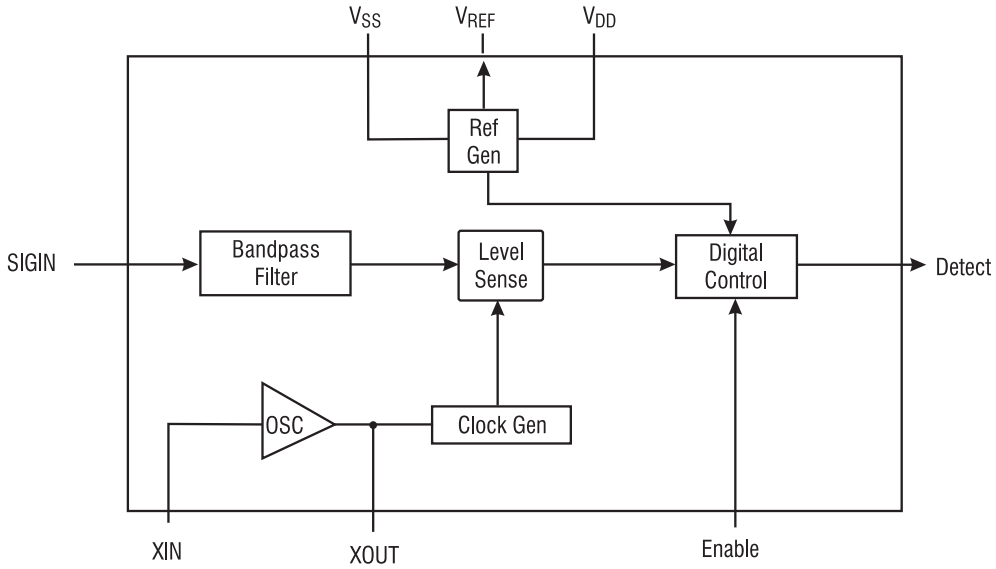

1 Specifications

1.1 Absolute Maximum Ratings

Symbol	Ratings	Units
DC Supply Voltage (V_{DD}-V_{SS})	6	V
Voltage on SIGIN	V_{DD}+0.5 to V_{SS}-12V	V
Voltage on any Pin Except SIGIN	V_{DD}+0.5 to V_{SS}-0.5V	V
Operating Temperature	- 40 to +85	°C
Storage Temperature Range	- 65 to +150	°C

Absolute maximum ratings are stress ratings. Stresses in excess of these ratings can cause permanent damage to the device. Functional operation of the device at conditions beyond those indicated in the operational sections of this data sheet is not implied.

1.2 Electrical Characteristics

Parameter			Minimum	Maximum	Units	Notes
Supply Current			-	5	mA	10-
Signal Detection	Level (5V)		- 38	0	dBm	1, 2
	Level (3V)		- 40	0	dBm	-
	Duration		40	-	ms	-
Signal Rejection	Level	Inband (5V)	-	- 50	dBm	1, 2
		Inband (3V)	-	- 55	dBm	-
		Outband	-	0	dBm	1, 3
Quiet Interval Detect	Duration		40	-	ms	8
			85	-	ms	9
"Detect" Output Pin	Logic "0"		-	0.5	V	4
	Logic "1"		V_{DD}-0.5	-		4
"Enable," "XIN," Input Pin	Logic "0"		V_{SS}	V_{SS}+0.2	V	5
	Logic "1"		V_{DD}-0.2	V_{DD}		5
"XIN" Duty Cycle			40	60	%	6
"XOUT" Loading			-	10	pF	-
"VREF" Output Pin	Deviation		- 2	+2	%	7
	Resistance		3.25	6.75	kΩ	-
"SIGIN" Input Pin	AC + DC Level		V_{SS}-5V	V_{DD}	V	-
	Impedance (500Hz)		80	-	kΩ	-
Power Consumption	3V Operation		-	15	mW	-
	5V Operation		-	25		-

Unless otherwise noted, V_{DD} - V_{SS} = 2.8V to 5.5V and T_A = 25°C
Notes:
1. 0 dBm = 0.775 V_{rms}.
2. f = 315Hz to 640Hz.
3. f > 1025Hz, < 190Hz.
4. Output current = 1mA, V_{SS} - V_{DD} - 3V.
5. Input current -10mA max.
6. External clock.
7. Nominal = (V_{DD} +V_{SS})/2.
8. Signal dropping from -38dBm to -65dBm.
9. Signal dropping from -10dBm to -65dBm.

2 Pin Descriptions

Pin	Description
SIGIN	Signal input AC or DC coupled (see level limitations elsewhere).
DETECT	Active output indicating signal detection. Activated by ENABLE.
ENABLE	Enables DETECT output. Used to mask signal activity.
V_{DD}	Most positive power supply pin.
V_{REF}	Internally generated reference voltage. $(V_{SS} + V_{DD})$ /2 volts.
V_{SS}	Most negative power supply pin.
XIN, XOUT	Crystal attachment pins. XIN may be used as the input for an external 3.58 MHz clock.

Signal Timing

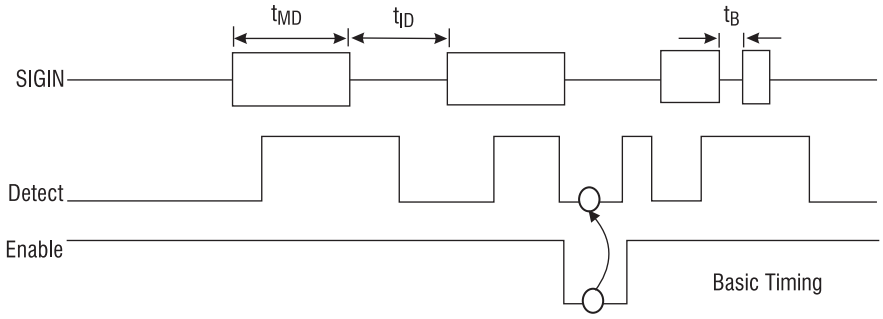

3 Call Progress Tone Detection

Call progress tones are audible tones sent from switching systems to calling parties to show the status of calls. Calling parties can identify the success of a call placed by what is heard after dialing. The type of tone used and its timing vary from system to system, and though intended for human ears these signals can provide valuable information for automated calling systems.

The M-980-02 is a signal detector sensitive to the frequencies most often used for these progress tones. Electronic equipment monitoring the DETECT output of the M-980-02 can determine the nature of signals present by measuring their duty cycle. See “Telephone Line Circuit Application” for a diagram of a circuit that could be used to permit a microcomputer to directly monitor tones on the telephone line. Much of the character of the progress tones is in their duty cycle or cadence (sometimes referred to as interruption rate). This information, coupled with level and frequency indication from the M-980-02, can be used to decide what progress tones have been encountered.

See table “Call Progress Tones” for some call progress tones with on/off times; 0.25/0.25 being 250 ms on, 250 ms off on a repeating basis. For example, dial tones as shown in the table are usually “on” continuously and last until the first dial digit is received by the switching system. Line Busy, on the other hand, is turned off and on at a rate of 1 Hz with a 50% duty cycle, or an interruption rate of 60 times per minute (60 IPM). The tones can be distinguished in this way.

It should be noted that while such techniques will usually be effective, there are some circumstances in which the M-980-02 cannot be accurately used. Examples include situations where ringback tone may be short or not even encountered. Ringback may be provided at ringing voltage frequency (20 or 30 Hz) with some harmonics and may not fall in the detect range, and speech or other strong noise may obscure tones making cadence measurement difficult.

Detection of “answer” is most difficult for many reasons. One way to determine if a called party has answered is by looking for a short burst of DETECT indications without a cadence match (produced by a

click and “hello” at the far end). Some applications will require special methods like speech detection, but most can be reliably handled with the M-980-02 and simple cadence measurement.

As can be seen, the tones used for the same purposes in different systems may not be the same. Standards do exist and should be consulted for your particular application. In North America, AT&T’s “Notes on the Network” or EIA’s RS-464 PBX standard, should be reviewed. In Europe, tone plans may vary with locale, in which case the CEPT administration in each country must be consulted. Outside these areas, national PTT organizations can provide information on the systems within their borders.

Device Timing

Time	Value	Significance
t_{MD}	40ms	A valid tone will always be detected if it is at least 40ms long.
t_{ID}	40ms @ -38dBm	Inter-tone gaps must be detected if greater than this duration.
	85ms @ -10dBm	
t_B	18ms	Drop-outs of valid tone of up to 18ms will be ignored.

Note: Application or removal of high level signals outside the must-detect range may cause momentary detection, which may be filtered by time guarding the output.

Call Progress Tones

Frequency 1	Frequency 2	On / Off	Use
350	+440	Continuous	Dial Tones
425	-	-	-
600	X 120	-	-
400	-	-	-
480	+620	0.5 / 0.5s	Line Busy Tones
600	X 120	-	-
480	+620	0.25 / 0.25s	Reorder Tones
600	X 120	-	-
440	+480	2.0 / 4.0s	Audible Ringing
500	X 40	-	-
440	-	0.5s burst	Various

Telephone Line Circuit Application

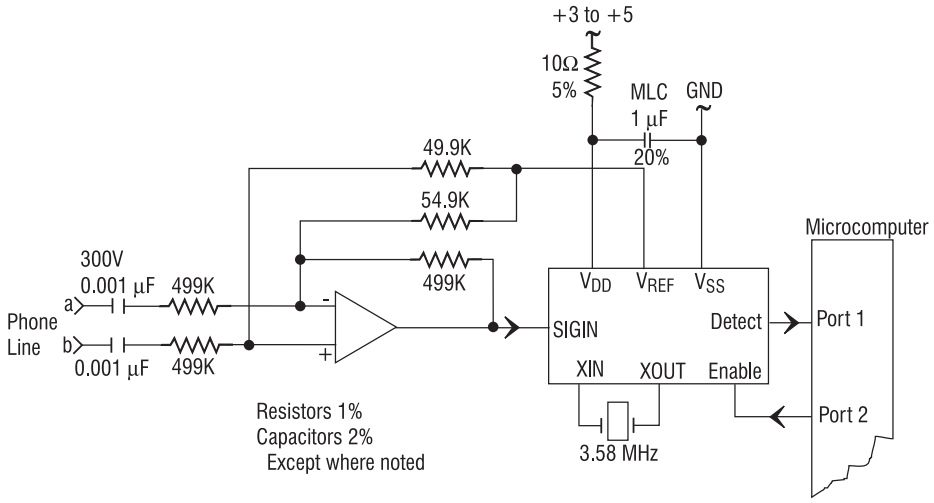

Detect Range

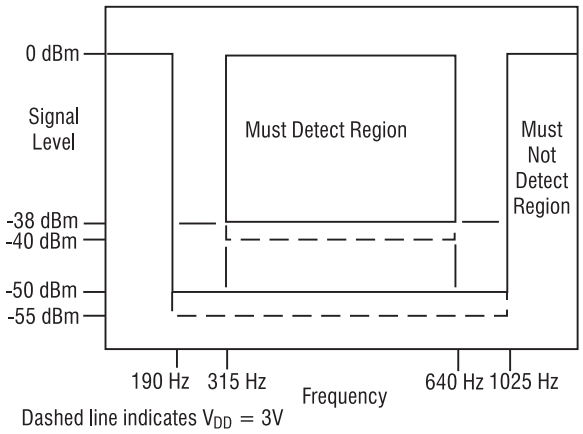

Input Signal Configuration

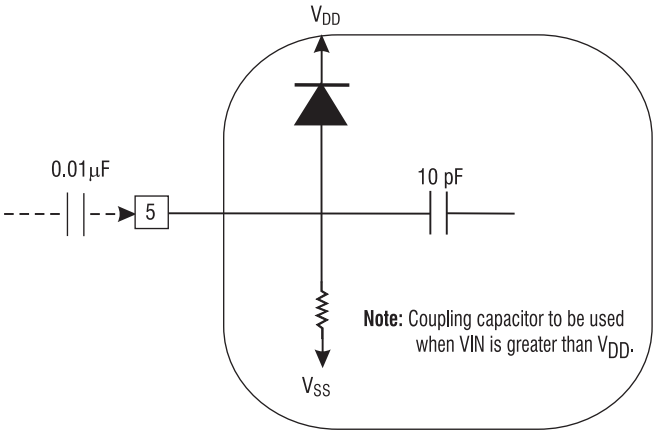

4 Manufacturing Information

4.1 ESD Sensitivity

This product is **ESD Sensitive**, and should be handled according to the industry standard **JESD-625**.

4.2 Reflow Profile

This product has a maximum body temperature and time rating as shown below. All other guidelines of **J-STD-020** must be observed.

Device	Maximum Temperature x Time
M-980-02P / M-980-02S	250°C for 30 seconds

4.3 Board Wash

IXYS Integrated Circuits Division recommends the use of no-clean flux formulations. However, board washing to remove flux residue is acceptable, and the use of a short drying bake may be necessary. Chlorine-based or Fluorine-based solvents or fluxes should not be used. Cleaning methods that employ ultrasonic energy should not be used.

4.4 Mechanical Dimensions

4.4.1 M-980-02P 8-Pin DIP Package

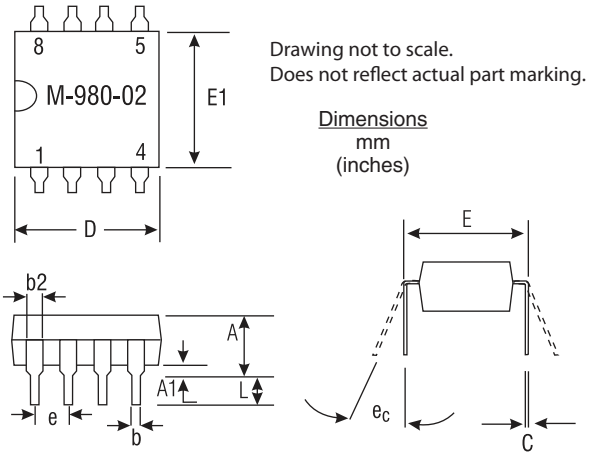

Drawing not to scale.
Does not reflect actual part marking.

Dimensions
mm
(inches)

Tolerances				
	Inches		Metric (mm)	
	Min	Max	Min	Max
A	-	.210	-	5.33
A1	.015	-	.38	-
b	.014	.022	.36	.56
b2	.045	.070	1.1	1.8
C	.008	.014	.20	.36
D	.355	.400	9.02	10.16
E	.300	.325	7.6	8.3
E1	.240	.280	6.1	7.1
e	.100 BSC		2.54 BSC	
ec	0°	15°	0°	15°
L	.115	.150	2.9	4.1

4.4.2 M-980-02S 16-Pin SOIC Package

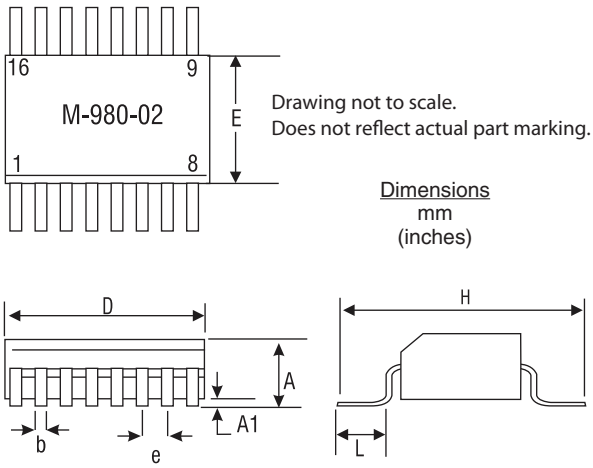

Drawing not to scale.
Does not reflect actual part marking.

Dimensions
mm
(inches)

Tolerances				
	Inches		Metric (mm)	
	Min	Max	Min	Max
A	.0926	.1043	2.35	2.65
A1	.0040	.0118	.10	.30
b	.013	.020	.33	.51
D	.3977	.4133	10.10	10.50
E	.2914	.2992	7.4	7.6
e	.050 BSC		1.27 BSC	
H	.394	.419	10.00	10.65
L	.016	.050	.40	1.27

For additional information please visit our website at: www.ixysic.com

IXYS Integrated Circuits Division makes no representations or warranties with respect to the accuracy or completeness of the contents of this publication and reserves the right to make changes to specifications and product descriptions at any time without notice. Neither circuit patent licenses nor indemnity are expressed or implied. Except as set forth in IXYS Integrated Circuits Division's Standard Terms and Conditions of Sale, IXYS Integrated Circuits Division assumes no liability whatsoever, and disclaims any express or implied warranty, relating to its products including, but not limited to, the implied warranty of merchantability, fitness for a particular purpose, or infringement of any intellectual property right.

The products described in this document are not designed, intended, authorized or warranted for use as components in systems intended for surgical implant into the body, or in other applications intended to support or sustain life, or where malfunction of IXYS Integrated Circuits Division's product may result in direct physical harm, injury, or death to a person or severe property or environmental damage. IXYS Integrated Circuits Division reserves the right to discontinue or make changes to its products at any time without notice.

Specification: DS-M-980-02-R04
©Copyright 2012, IXYS Integrated Circuits Division
All rights reserved. Printed in USA.
12/22/2012

Компания «ЭлектроПласт» предлагает заключение долгосрочных отношений при поставках импортных электронных компонентов на взаимовыгодных условиях!

Наши преимущества:

- Оперативные поставки широкого спектра электронных компонентов отечественного и импортного производства напрямую от производителей и с крупнейших мировых складов;
- Поставка более 17-ти миллионов наименований электронных компонентов;
- Поставка сложных, дефицитных, либо снятых с производства позиций;
- Оперативные сроки поставки под заказ (от 5 рабочих дней);
- Экспресс доставка в любую точку России;
- Техническая поддержка проекта, помощь в подборе аналогов, поставка прототипов;
- Система менеджмента качества сертифицирована по Международному стандарту ISO 9001;
- Лицензия ФСБ на осуществление работ с использованием сведений, составляющих государственную тайну;
- Поставка специализированных компонентов (Xilinx, Altera, Analog Devices, Intersil, Interpoint, Microsemi, Aeroflex, Peregrine, Syfer, Eurofarad, Texas Instrument, Miteq, Cobham, E2V, MA-COM, Hittite, Mini-Circuits,General Dynamics и др.);

Помимо этого, одним из направлений компании «ЭлектроПласт» является направление «Источники питания». Мы предлагаем Вам помощь Конструкторского отдела:

- Подбор оптимального решения, техническое обоснование при выборе компонента;
- Подбор аналогов;
- Консультации по применению компонента;
- Поставка образцов и прототипов;
- Техническая поддержка проекта;
- Защита от снятия компонента с производства.

Как с нами связаться

Телефон: 8 (812) 309 58 32 (многоканальный)
Факс: 8 (812) 320-02-42
Электронная почта: org@eplast1.ru
Адрес: 198099, г. Санкт-Петербург, ул. Калинина, дом 2, корпус 4, литера А.