Cree® Screen Master® 5-mm Oval LED C566D-RFF/GFF/BFF/AFF C566D-RFE/GFE/BFE/AFE

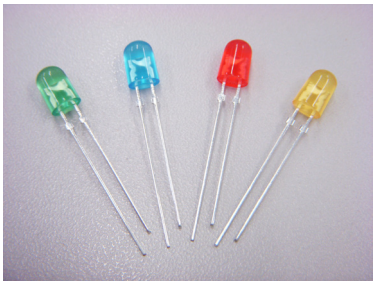

PRODUCT DESCRIPTION

The oval LED is specifically designed for variable-message signs and passenger-information signs.The oval-shaped radiation pattern and high luminous intensity ensure that these devices are excellent for wide-field-of -view outdoor applications where a wide viewing angle and readability in sunlight are essential.

These lamps are tinted and diffused. The encapsulation resin contains anti-UV material in order to reduce the effects of long-term exposure to direct sunlight.

FEATURES

- Size (mm): 5
- Color and Typical Dominant Wavelength:
  Red (621nm)
  Green(527nm)
  Blue(470nm)
  Amber(591nm)
- Luminous Intensity (mcd)
  C566D-RFF/RFE:(2130-5860)
  C566D-GFF/GFE:(5860-12000)
  C566D-BFF/BFE:(1520-3000)
  C566D-AFF/AFE:(2130-5860)
- Lead - Free
- RoHS Compliant

APPLICATIONS

- Electronic Signs & Signals (ESS)
- Full Color video screen
- Motorway Signs
- Variable Message Sign (VMS)
- Advertising signs
- Petrol Signs

Copyright © 2017 Cree, Inc. All rights reserved. The information in this document is subject to change without notice. Cree and the Cree logo are registered trademarks of Cree, Inc.

Cree, Inc.
4600 Silicon Drive
Durham, NC 27703
USA Tel: +1.919.313.5300

ABSOLUTE MAXIMUM RATINGS (T_A = 25°C)

Items	Symbol	Absolute Maximum Rating		Unit
		Red and Amber	Blue and Green	
Forward Current	I_F	50 Note1	35	mA
Peak Forward Current Note2	I_{FP}	200	100	mA
Reverse Voltage	V_R	5	5	V
Power Dissipation	P_D	130	140	mW
Operation Temperature	T_{opr}	-40 ~ +95		°C
Storage Temperature	T_{stg}	-40 ~ +100		°C
Lead Soldering Temperature	T_{sol}	Max. 260°C for 3 sec. max. (3 mm from the base of the epoxy bulb)		
Electrostatic Discharge Classification (MIL-STD-883E)	ESD	Class 2		

Note:
1. For long term performance the drive currents between 10mA and 30mA are recommended. Please contact CREE sales representative for more information on recommended drive conditions.
2. Pulse width ≤0.1 msec, duty ≤1/10.

TYPICAL ELECTRICAL & OPTICAL CHARACTERISTICS (T_A = 25°C)

Characteristics	Color	Symbol	Condition	Unit	Minimum	Typical	Maximum
Forward Voltage	Red/Amber	V_F	I_F = 20 mA	V		2.1	2.6
	Blue/Green	V_F	I_F = 20 mA	V		3.4	4.0
Reverse Current	Red/Amber	I_R	V_R = 5 V	μA			100
	Blue/Green	I_R	V_R = 5 V	μA			100
Dominant Wavelength	Red	λ_D	I_F = 20 mA	nm	619	621	624
	Green	λ_D	I_F = 20 mA	nm	520	527	535
	Blue	λ_D	I_F = 20 mA	nm	460	470	475
	Amber	λ_D	I_F = 20 mA	nm	584	591	596
Luminous Intensity	Red	I_V	I_F = 20 mA	mcd	2130	3000	
	Green	I_V	I_F = 20 mA	mcd	5860	8200	
	Blue	I_V	I_F = 20 mA	mcd	1520	2000	
	Amber	I_V	I_F = 20 mA	mcd	2130	3000	

Copyright © 2017 Cree, Inc. All rights reserved. The information in this document is subject to change without notice. Cree and the Cree logo are registered trademarks of Cree, Inc.

INTENSITY BIN LIMIT (I_F = 20 mA)

Red

Bin Code	Sub-bin	Min. (mcd)	Max. (mcd)
V0	V1	2130	2347
	V2	2347	2564
	V3	2564	2781
	V4	2781	3000
W0	W1	3000	3295
	W2	3295	3590
	W3	3590	3885
	W4	3885	4180
X0	X1	4180	4600
	X2	4600	5020
	X3	5020	5440
	X4	5440	5860

Amber

Bin Code	Sub-bin	Min. (mcd)	Max. (mcd)
V0	V1	2130	2347
	V2	2347	2564
	V3	2564	2781
	V4	2781	3000
W0	W1	3000	3295
	W2	3295	3590
	W3	3590	3885
	W4	3885	4180
X0	X1	4180	4600
	X2	4600	5020
	X3	5020	5440
	X4	5440	5860

Green

Bin Code	Sub-bin	Min. (mcd)	Max. (mcd)
Y0	Y1	5860	6445
	Y2	6445	7030
	Y3	7030	7615
	Y4	7615	8200
Z0	Z1	8200	9150
	Z2	9150	10100
	Z3	10100	11050
	Z4	11050	12000

Blue

Bin Code	Sub-bin	Min. (mcd)	Max. (mcd)
U0	U1	1520	1672
	U2	1672	1824
	U3	1824	1976
	U4	1976	2130
V0	V1	2130	2347
	V2	2347	2564
	V3	2564	2781
	V4	2781	3000

- Tolerance of measurement of luminous intensity is ±15%

Copyright © 2017 Cree, Inc. All rights reserved. The information in this document is subject to change without notice. Cree and the Cree logo are registered trademarks of Cree, Inc.

COLOR BIN LIMIT (I_F = 20 mA)

Red

Bin Code	Min.(nm)	Max.(nm)
RB	619	624

Amber

Bin Code	Min. (nm)	Max. (nm)
A2	584	587
A3	587	590
A4	590	593
A5	593	596

Green

Bin Code	Min.(nm)	Max.(nm)
G7	520	525
G23	522.5	527.5
G8	525	530
G45	527.5	532.5
G9	530	535

Blue

Bin Code	Min.(nm)	Max.(nm)
B3	460	465
B23	462.5	467.5
B4	465	470
B45	467.5	472.5
B5	470	475

- Tolerance of measurement of dominant wavelength is ±1 nm

Copyright © 2017 Cree, Inc. All rights reserved. The information in this document is subject to change without notice. Cree and the Cree logo are registered trademarks of Cree, Inc.

ORDER CODE TABLE*

Color	Kit Number	Luminous Intensity (mcd)		Dominant Wavelength				Package	Standoff
		Min.	Max.	Color Bin	Min. (nm)	Color Bin	Max. (nm)		
Red	C566D-RFF-CV0X0BB1	2130	5860	RB	619	RB	624	Bulk	Yes
Red	C566D-RFF-CV14QBB1	Any 4 consecutive sub-bins: V1(2130) - W2 (3590)		RB	619	RB	624	Bulk	Yes
Red	C566D-RFF-CV34QBB1	Any 4 consecutive sub-bins: V3(2564) - W4 (4180)		RB	619	RB	624	Bulk	Yes
Red	C566D-RFE-CV0X0BB1	2130	5860	RB	619	RB	624	Bulk	No
Red	C566D-RFE-CV14QBB1	Any 4 consecutive sub-bins: V1(2130) - W2 (3590)		RB	619	RB	624	Bulk	No
Red	C566D-RFE-CV34QBB1	Any 4 consecutive sub-bins: V3(2564) - W4 (4180)		RB	619	RB	624	Bulk	No
Red	C566D-RFF-CV0X0BB2	2130	5860	RB	619	RB	624	Ammo	Yes
Red	C566D-RFF-CV14QBB2	Any 4 consecutive sub-bins: V1(2130) - W2 (3590)		RB	619	RB	624	Ammo	Yes
Red	C566D-RFF-CV34QBB2	Any 4 consecutive sub-bins: V3(2564) - W4 (4180)		RB	619	RB	624	Ammo	Yes
Red	C566D-RFE-CV0X0BB2	2130	5860	RB	619	RB	624	Ammo	No
Red	C566D-RFE-CV14QBB2	Any 4 consecutive sub-bins: V1(2130) - W2 (3590)		RB	619	RB	624	Ammo	No
Red	C566D-RFE-CV34QBB2	Any 4 consecutive sub-bins: V3(2564) - W4 (4180)		RB	619	RB	624	Ammo	No

Copyright © 2017 Cree, Inc. All rights reserved. The information in this document is subject to change without notice. Cree and the Cree logo are registered trademarks of Cree, Inc.

ORDER CODE TABLE*

Color	Kit Number	Luminous Intensity (mcd)		Dominant Wavelength				Package	Standoff
		Min.	Max.	Color Bin	Min. (nm)	Color Bin	Max. (nm)		
Green	C566D-GFF-CY0Z0791	5860	12000	G7	520	G9	535	Bulk	Yes
Green	C566D-GFF-CY14Q7S1	Any 4 consecutive sub-bins: Y1 (5860) - Z2 (10100)		Any 1 color bin from G7 (520nm) to G8 (530nm)				Bulk	Yes
Green	C566D-GFF-CY14Q8S1	Any 4 consecutive sub-bins: Y1 (5860) - Z2 (10100)		Any 1 color bin from G8 (525nm) to G9 (535nm)				Bulk	Yes
Green	C566D-GFF-CY34Q7S1	Any 4 consecutive sub-bins: Y3 (7030) - Z4 (12000)		Any 1 color bin from G7 (520nm) to G8 (530nm)				Bulk	Yes
Green	C566D-GFF-CY34Q8S1	Any 4 consecutive sub-bins: Y3 (7030) - Z4 (12000)		Any 1 color bin from G8 (525nm) to G9 (535nm)				Bulk	Yes
Green	C566D-GFE-CY0Z0791	5860	12000	G7	520	G9	535	Bulk	No
Green	C566D-GFE-CY14Q7S1	Any 4 consecutive sub-bins: Y1 (5860) - Z2 (10100)		Any 1 color bin from G7 (520nm) to G8 (530nm)				Bulk	No
Green	C566D-GFE-CY14Q8S1	Any 4 consecutive sub-bins: Y1 (5860) - Z2 (10100)		Any 1 color bin from G8 (525nm) to G9 (535nm)				Bulk	No
Green	C566D-GFE-CY34Q7S1	Any 4 consecutive sub-bins: Y3 (7030) - Z4 (12000)		Any 1 color bin from G7 (520nm) to G8 (530nm)				Bulk	No
Green	C566D-GFE-CY34Q8S1	Any 4 consecutive sub-bins: Y3 (7030) - Z4 (12000)		Any 1 color bin from G8 (525nm) to G9 (535nm)				Bulk	No
Green	C566D-GFF-CY0Z0792	5860	12000	G7	520	G9	535	Ammo	Yes
Green	C566D-GFF-CY14Q7S2	Any 4 consecutive sub-bins: Y1 (5860) - Z2 (10100)		Any 1 color bin from G7 (520nm) to G8 (530nm)				Ammo	Yes
Green	C566D-GFF-CY14Q8S2	Any 4 consecutive sub-bins: Y1 (5860) - Z2 (10100)		Any 1 color bin from G8 (525nm) to G9 (535nm)				Ammo	Yes
Green	C566D-GFF-CY34Q7S2	Any 4 consecutive sub-bins: Y3 (7030) - Z4 (12000)		Any 1 color bin from G7 (520nm) to G8 (530nm)				Ammo	No
Green	C566D-GFF-CY34Q8S2	Any 4 consecutive sub-bins: Y3 (7030) - Z4 (12000)		Any 1 color bin from G8 (525nm) to G9 (535nm)				Ammo	No
Green	C566D-GFE-CY0Z0792	5860	12000	G7	520	G9	535	Ammo	No
Green	C566D-GFE-CY14Q7S2	Any 4 consecutive sub-bins: Y1 (5860) - Z2 (10100)		Any 1 color bin from G7 (520nm) to G8 (530nm)				Ammo	No
Green	C566D-GFE-CY14Q8S2	Any 4 consecutive sub-bins: Y1 (5860) - Z2 (10100)		Any 1 color bin from G8 (525nm) to G9 (535nm)				Ammo	No
Green	C566D-GFE-CY34Q7S2	Any 4 consecutive sub-bins: Y3 (7030) - Z4 (12000)		Any 1 color bin from G7 (520nm) to G8 (530nm)				Ammo	No
Green	C566D-GFE-CY34Q8S2	Any 4 consecutive sub-bins: Y3 (7030) - Z4 (12000)		Any 1 color bin from G8 (525nm) to G9 (535nm)				Ammo	No

Copyright © 2017 Cree, Inc. All rights reserved. The information in this document is subject to change without notice. Cree and the Cree logo are registered trademarks of Cree, Inc.

ORDER CODE TABLE*

Color	Kit Number	Luminous Intensity (mcd)		Dominant Wavelength				Package	Stand-off
		Min.	Max.	Color Bin	Min. (nm)	Color Bin	Max. (nm)		
Blue	C566D-BFF-CU0W0351	1520	4180	B3	460	B5	475	Bulk	Yes
Blue	C566D-BFF-CU14Q3S1	Any 4 consecutive sub-bins: U1(1520) - V2 (2564)		Any 1 color bin from B3 (460nm) to B4 (470nm)				Bulk	Yes
Blue	C566D-BFF-CU14Q4S1	Any 4 consecutive sub-bins: U1(1520) - V2 (2564)		Any 1 color bin from B4 (465nm) to B5 (475nm)				Bulk	Yes
Blue	C566D-BFF-CU34Q3S1	Any 4 consecutive sub-bins: U3(1824) - V4 (3000)		Any 1 color bin from B3 (460nm) to B4 (470nm)				Bulk	Yes
Blue	C566D-BFF-CU34Q4S1	Any 4 consecutive sub-bins: U3(1824) - V4 (3000)		Any 1 color bin from B4 (465nm) to B5 (475nm)				Bulk	Yes
Blue	C566D-BFE-CU0W0351	1520	4180	B3	460	B5	475	Bulk	No
Blue	C566D-BFE-CU14Q3S1	Any 4 consecutive sub-bins: U1(1520) - V2 (2564)		Any 1 color bin from B3 (460nm) to B4 (470nm)				Bulk	No
Blue	C566D-BFE-CU14Q4S1	Any 4 consecutive sub-bins: U1(1520) - V2 (2564)		Any 1 color bin from B4 (465nm) to B5 (475nm)				Bulk	No
Blue	C566D-BFE-CU34Q3S1	Any 4 consecutive sub-bins: U3(1824) - V4 (3000)		Any 1 color bin from B3 (460nm) to B4 (470nm)				Bulk	No
Blue	C566D-BFE-CU34Q4S1	Any 4 consecutive sub-bins: U3(1824) - V4 (3000)		Any 1 color bin from B4 (465nm) to B5 (475nm)				Bulk	No
Blue	C566D-BFF-CU0W0352	1520	4180	B3	460	B5	475	Ammo	Yes
Blue	C566D-BFF-CU14Q3S2	Any 4 consecutive sub-bins: U1(1520) - V2 (2564)		Any 1 color bin from B3 (460nm) to B4 (470nm)				Ammo	Yes
Blue	C566D-BFF-CU14Q4S2	Any 4 consecutive sub-bins: U1(1520) - V2 (2564)		Any 1 color bin from B4 (465nm) to B5 (475nm)				Ammo	Yes
Blue	C566D-BFF-CU34Q3S2	ny 4 consecutive sub-bins: U3(1824) - V4 (3000)		Any 1 color bin from B3 (460nm) to B4 (470nm)				Ammo	Yes
Blue	C566D-BFF-CU34Q4S2	Any 4 consecutive sub-bins: U3(1824) - V4 (3000)		Any 1 color bin from B4 (465nm) to B5 (475nm)				Ammo	Yes
Blue	C566D-BFE-CU0W0352	1520	4180	B3	460	B5	475	Ammo	No
Blue	C566D-BFE-CU14Q3S2	Any 4 consecutive sub-bins: U1(1520) - V2 (2564)		Any 1 color bin from B3 (460nm) to B4 (470nm)				Ammo	No
Blue	C566D-BFE-CU14Q4S2	Any 4 consecutive sub-bins: U1(1520) - V2 (2564)		Any 1 color bin from B4 (465nm) to B5 (475nm)				Ammo	No
Blue	C566D-BFE-CU34Q3S2	Any 4 consecutive sub-bins: U3(1824) - V4 (3000)		Any 1 color bin from B3 (460nm) to B4 (470nm)				Ammo	No
Blue	C566D-BFE-CU34Q4S2	Any 4 consecutive sub-bins: U3(1824) - V4 (3000)		Any 1 color bin from B4 (465nm) to B5 (475nm)				Ammo	No

Copyright © 2017 Cree, Inc. All rights reserved. The information in this document is subject to change without notice. Cree and the Cree logo are registered trademarks of Cree, Inc.

ORDER CODE TABLE*

Color	Kit Number	Luminous Intensity (mcd)		Dominant Wavelength				Package	Standoff
		Min.	Max.	Color Bin	Min. (nm)	Color Bin	Max. (nm)		
Amber	C566D-AFF-CV0X0251	2130	5860	A2	584	A5	596	Bulk	Yes
Amber	C566D-AFF-CV14Q341	Any 4 consecutive sub-bins: V1(2130) - W2 (3590)		A3	587	A4	593	Bulk	Yes
Amber	C566D-AFF-CV34Q341	Any 4 consecutive sub-bins: V3(2564) - W4 (4180)		A3	587	A4	593	Bulk	Yes
Amber	C566D-AFE-CV0X0251	2130	5860	A2	584	A5	596	Bulk	No
Amber	C566D-AFE-CV14Q341	Any 4 consecutive sub-bins: V1(2130) - W2 (3590)		A3	587	A4	593	Bulk	No
Amber	C566D-AFE-CV34Q341	Any 4 consecutive sub-bins: V3(2564) - W4 (4180)		A3	587	A4	593	Bulk	No
Amber	C566D-AFF-CV0X0252	2130	5860	A2	584	A5	596	Ammo	Yes
Amber	C566D-AFF-CV14Q342	Any 4 consecutive sub-bins: V1(2130) - W2 (3590)		A3	587	A4	593	Ammo	Yes
Amber	C566D-AFF-CV34Q342	Any 4 consecutive sub-bins: V3(2564) - W4(4180)		A3	587	A4	593	Ammo	Yes
Amber	C566D-AFE-CV0X0252	2130	5860	A2	584	A5	596	Ammo	No
Amber	C566D-AFE-CV14Q342	Any 4 consecutive sub-bins: V1(2130) - W2 (3590)		A3	587	A4	593	Ammo	No
Amber	C566D-AFE-CV34Q342	Any 4 consecutive sub-bins: V3(2564) - W4(4180)		A3	587	A4	593	Ammo	No

Notes:
1. The above kit numbers represent order codes that include multiple intensity-bin and color-bin codes. Only one intensity-bin code and one color-bin code will be shipped on each reel. Single intensity-bin, single color-bin codes will not be orderable.
2. Please refer to the "Cree LED Lamp Reliability Test Standards" document for reliability test conditions.
3. Please refer to the "Cree LED Lamp Soldering & Handling" document for information about how to use this LED product safely.

Copyright © 2017 Cree, Inc. All rights reserved. The information in this document is subject to change without notice. Cree and the Cree logo are registered trademarks of Cree, Inc.

GRAPHS

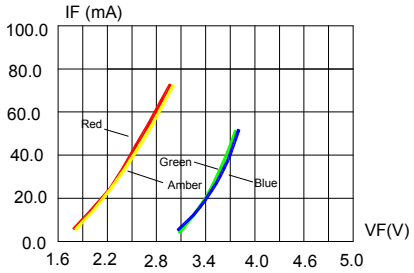

FIG.1 FORWARD CURRENT VS. FORWARD VOLTAGE.

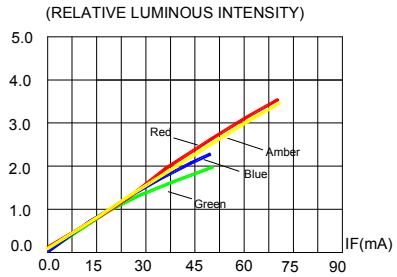

FIG.2 RELATIVE LUMINOUS INTENSITY VS. FORWARD CURRENT

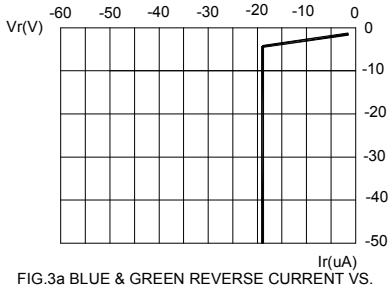

FIG.3a BLUE & GREEN REVERSE CURRENT VS. REVERSE VOLTAGE.

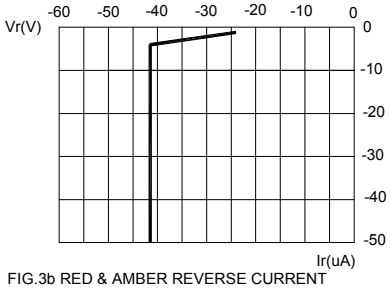

FIG.3b RED & AMBER REVERSE CURRENT VS. REVERSE VOLTAGE.

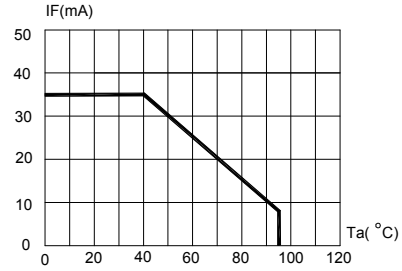

FIG.4a BLUE & GREEN MAXIMUM FORWARD DC CURRENT VS AMBIENT TEMPERATURE (Tjmax=105°C)

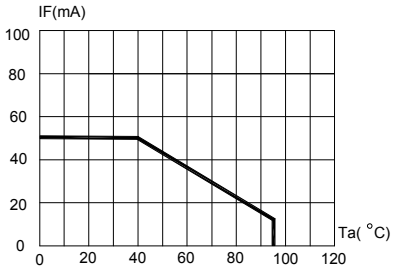

FIG.4b RED & AMBER MAXIMUM FORWARD DC CURRENT VS AMBIENT TEMPERATURE (Tjmax=105°C)

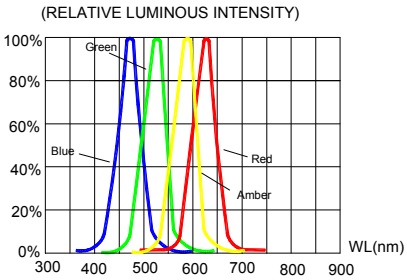

FIG.5 RELATIVE LUMINOUS INTENSITY VS. WAVELENGTH.

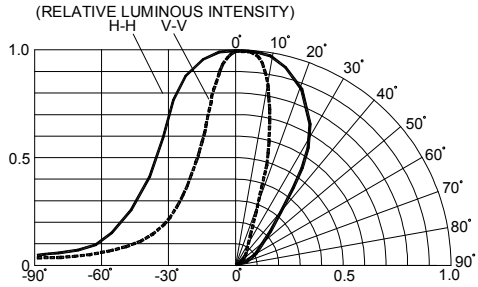

FIG.6 FAR FIELD PATTERN

The above data are collected from statistical figures that do not necessarily correspond to the actual parameters of each single LED. Hence, these data will be changed without further notice.

Copyright © 2017 Cree, Inc. All rights reserved. The information in this document is subject to change without notice. Cree and the Cree logo are registered trademarks of Cree, Inc.

MECHANICAL DIMENSIONS

All dimensions are in mm. Tolerance is ±0.25 mm unless otherwise noted.

An epoxy meniscus may extend about 1.5 mm down the leads.

Burr around bottom of epoxy may be 0.5 mm max.

C566D-RFF/GFF/BFF/AFF:

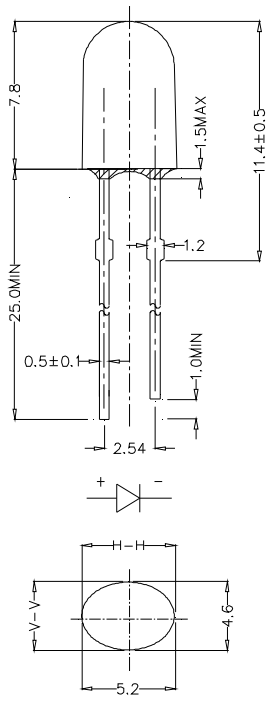

C566D-RFE/GFE/BFE/AFE:

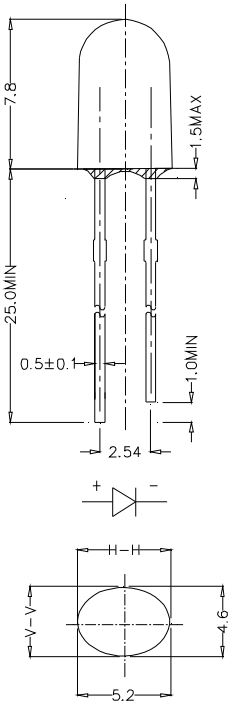

NOTES

Lead Frame Materials

Ag-plated and Lead-free Solder-plated iron.

RoHS Compliance

The levels of environmentally sensitive, persistent biologically toxic (PBT), persistent organic pollutants (POP), or otherwise restricted materials in this product are below the maximum concentration values (also referred to as the threshold limits) permitted for such substances, or are used in an exempted application, in accordance with EU Directive 2002/95/EC on the restriction of the use of certain hazardous substances in electrical and electronic equipment (RoHS), as amended through April 21, 2006.

Vision Advisory Claim

Users should be cautioned not to stare at the light of this LED product. The bright light can damage the eye.

Copyright © 2017 Cree, Inc. All rights reserved. The information in this document is subject to change without notice. Cree and the Cree logo are registered trademarks of Cree, Inc.

KIT NUMBER SYSTEM

All dimensions in mm.Cree LED lamps are tested and sorted into performance bins. A bin is specified by ranges of color, forward voltage, and brightness. Sorted LEDs are packaged for shipping in various convenient options. Please refer to the "Cree LED Lamp Packaging Standard" document for more information about shipping and packaging options.

Cree LEDs are sold by order codes in combinations of bins called kits. Order codes are configured in the following manner:

CCCCC - D X G - X H H K K M N T

CCCCC - Product Series

D - Color

G - Option
S : Standoff
N : No Standoff
B : Black Face
W : White Face
A : Black Body
E: Iron Lead Frame without standoff
F : Iron Lead Frame with Standoff

T - Packaging Type
1 : Bulk Pack
2 : Ammo Pack
3 : Tape & Reel (Roll Pack)
4 : Tube Pack

N - Max. Wavelength/Chromaticity Range
R : Select 1 hue from 4 hue bins
S : Select 1 hue from 3 hue bins
T : Select 1 hue from 2 hue bins
U : Select 2 hue from 4 hue bins
V : Select 2 hue from 3 hue bins

M - Min. Wavelength/Chromaticity Range
Refer to order code table

KK - Maximum Intensity Bin
Refer to order code table

HH - Minimum Intensity Bin
Refer to order code table

* Please contact our sales representative for ordering information.

Copyright © 2017 Cree, Inc. All rights reserved. The information in this document is subject to change without notice. Cree and the Cree logo are registered trademarks of Cree, Inc.

PACKAGING

Features:

- The LEDs are packed in cardboard boxes after packaging in normal or anti-electrostatic bags.
- Cardboard boxes will be used to protect the LEDs from mechanical shock during transportation.
- The boxes are not water resistant, and they must be kept away from water and moisture.
- The Bulk Pack types of packaging.
- Max 500 pcs per bulk and Max 2500 pcs per ammo.

Bulk Pack Packaging Type:

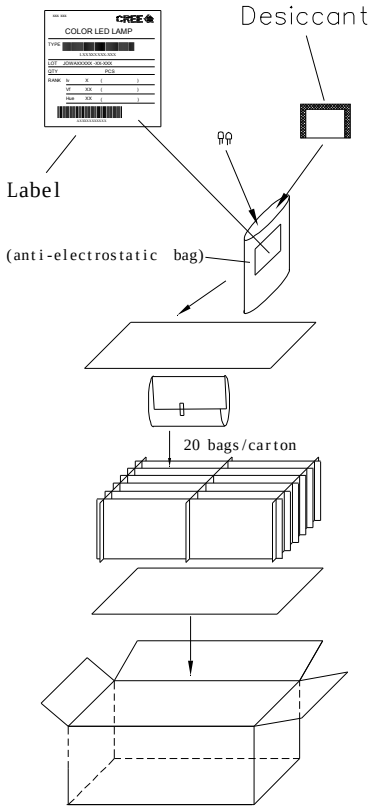

Ammo Pack Packaging Type:

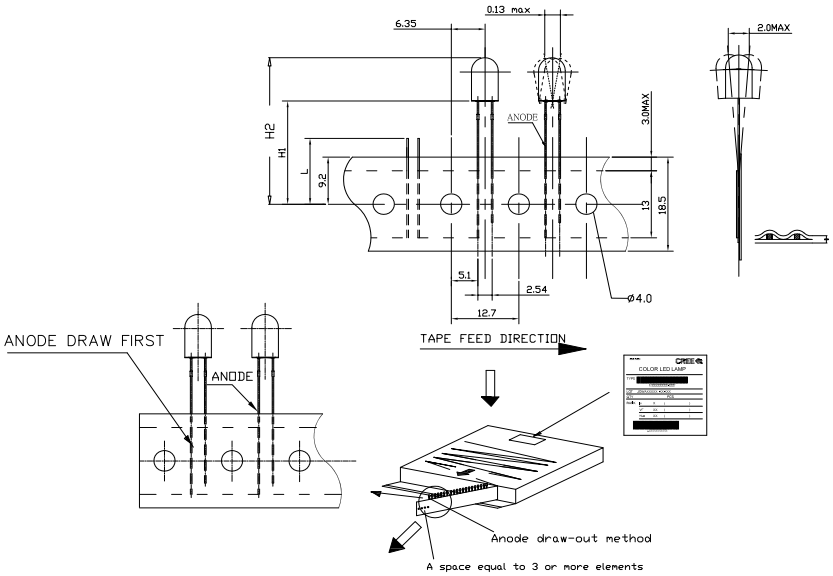

Copyright © 2017 Cree, Inc. All rights reserved. The information in this document is subject to change without notice. Cree and the Cree logo are registered trademarks of Cree, Inc.

Компания «ЭлектроПласт» предлагает заключение долгосрочных отношений при поставках импортных электронных компонентов на взаимовыгодных условиях!

Наши преимущества:

- Оперативные поставки широкого спектра электронных компонентов отечественного и импортного производства напрямую от производителей и с крупнейших мировых складов;
- Поставка более 17-ти миллионов наименований электронных компонентов;
- Поставка сложных, дефицитных, либо снятых с производства позиций;
- Оперативные сроки поставки под заказ (от 5 рабочих дней);
- Экспресс доставка в любую точку России;
- Техническая поддержка проекта, помощь в подборе аналогов, поставка прототипов;
- Система менеджмента качества сертифицирована по Международному стандарту ISO 9001;
- Лицензия ФСБ на осуществление работ с использованием сведений, составляющих государственную тайну;
- Поставка специализированных компонентов (Xilinx, Altera, Analog Devices, Intersil, Interpoint, Microsemi, Aeroflex, Peregrine, Syfer, Eurofarad, Texas Instrument, Miteq, Cobham, E2V, MA-COM, Hittite, Mini-Circuits,General Dynamics и др.);

Помимо этого, одним из направлений компании «ЭлектроПласт» является направление «Источники питания». Мы предлагаем Вам помощь Конструкторского отдела:

- Подбор оптимального решения, техническое обоснование при выборе компонента;
- Подбор аналогов;
- Консультации по применению компонента;
- Поставка образцов и прототипов;
- Техническая поддержка проекта;
- Защита от снятия компонента с производства.

Как с нами связаться

Телефон: 8 (812) 309 58 32 (многоканальный)
Факс: 8 (812) 320-02-42
Электронная почта: org@eplast1.ru
Адрес: 198099, г. Санкт-Петербург, ул. Калинина, дом 2, корпус 4, литера А.