STM8L151x4, STM8L151x6, STM8L152x4, STM8L152x6

8-bit ultra-low-power MCU, up to 32 KB Flash, 1 KB Data EEPROM, RTC, LCD, timers, USART, I2C, SPI, ADC, DAC, comparators

Datasheet - production data

Features

- Operating conditions
  - Operating power supply range 1.8 V to 3.6 V (down to 1.65 V at power down)
  - Temp. range: - 40 °C to 85, 105 or 125 °C
- Low power features
  - 5 low power modes: Wait, Low power run (5.1 µA), Low power wait (3 µA), Active-halt with full RTC (1.3 µA), Halt (350 nA)
  - Consumption: 195 µA/MHz + 440 µA
  - Ultra-low leakage per I/0: 50 nA
  - Fast wakeup from Halt: 4.7 µs
- Advanced STM8 core
  - Harvard architecture and 3-stage pipeline
  - Max freq. 16 MHz, 16 CISC MIPS peak
  - Up to 40 external interrupt sources
- Reset and supply management
  - Low power, ultra-safe BOR reset with 5 selectable thresholds
  - Ultra-low-power POR/PDR
  - Programmable voltage detector (PVD)
- Clock management
  - 1 to 16 MHz crystal oscillator
  - 32 kHz crystal oscillator
  - Internal 16 MHz factory-trimmed RC
  - Internal 38 kHz low consumption RC
  - Clock security system
- Low power RTC
  - BCD calendar with alarm interrupt
  - Auto-wakeup from Halt w/ periodic interrupt
- LCD: up to 4x28 segments w/ step-up converter
- Memories
  - Up to 32 KB of Flash program memory and 1 Kbyte of data EEPROM with ECC, RWW
  - Flexible write and read protection modes
  - Up to 2 Kbyte of RAM
- DMA
  - 4 channels; supported peripherals: ADC, DAC, SPI, I2C, USART, timers
  - 1 channel for memory-to-memory

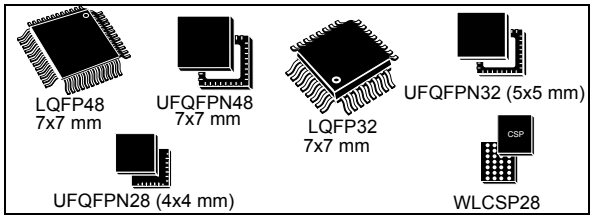

- 12-bit DAC with output buffer
- 12-bit ADC up to 1 Msps/25 channels
  - T. sensor and internal reference voltage
- 2 ultra-low-power comparators
  - 1 with fixed threshold and 1 rail to rail
  - Wakeup capability
- Timers
  - Two 16-bit timers with 2 channels (used as IC, OC, PWM), quadrature encoder
  - One 16-bit advanced control timer with 3 channels, supporting motor control
  - One 8-bit timer with 7-bit prescaler
  - 2 watchdogs: 1 Window, 1 Independent
  - Beeper timer with 1, 2 or 4 kHz frequencies
- Communication interfaces
  - Synchronous serial interface (SPI)
  - Fast I2C 400 kHz SMBus and PMBus
  - USART (ISO 7816 interface and IrDA)
- Up to 41 I/Os, all mappable on interrupt vectors
- Up to 16 capacitive sensing channels supporting touchkey, proximity, linear touch and rotary touch sensors
- Development support
  - Fast on-chip programming and non intrusive debugging with SWIM
  - Bootloader using USART
- 96-bit unique ID

Table 1. Device summary

Reference	Part number
STM8L151xx (without LCD)	STM8L151C4, STM8L151C6, STM8L151K4, STM8L151K6, STM8L151G4, STM8L151G6
STM8L152xx (with LCD)	STM8L152C4, STM8L152C6, STM8L152K4, STM8L152K6

This is information on a product in full production. www.st.com

Contents

1 Introduction 9

2 Description 11

2.1 Device overview 12

2.2 Ultra-low-power continuum 13

3 Functional overview 14

3.1 Low-power modes 15

3.2 Central processing unit STM8 16

3.2.1 Advanced STM8 Core 16

3.2.2 Interrupt controller 16

3.3 Reset and supply management 17

3.3.1 Power supply scheme 17

3.3.2 Power supply supervisor 17

3.3.3 Voltage regulator 17

3.4 Clock management 18

3.5 Low power real-time clock 19

3.6 LCD (Liquid crystal display) 20

3.7 Memories 20

3.8 DMA 20

3.9 Analog-to-digital converter 20

3.10 Digital-to-analog converter (DAC) 21

3.11 Ultra-low-power comparators 21

3.12 System configuration controller and routing interface 21

3.13 Touch sensing 21

3.14 Timers 22

3.14.1 TIM1 - 16-bit advanced control timer 22

3.14.2 16-bit general purpose timers 23

3.14.3 8-bit basic timer 23

3.15 Watchdog timers 23

3.15.1 Window watchdog timer 23

3.15.2 Independent watchdog timer 23

3.16 Beeper 23
3.17 Communication interfaces 24
3.17.1 SPI 24
3.17.2 I²C 24
3.17.3 USART 24
3.18 Infrared (IR) interface 24
3.19 Development support 25

4 Pinout and pin description 26
4.1 System configuration options 37

5 Memory and register map 38
5.1 Memory mapping 38
5.2 Register map 39

6 Interrupt vector mapping 57

7 Option bytes 59

8 Unique ID 62

9 Electrical parameters 63
9.1 Parameter conditions 63
9.1.1 Minimum and maximum values 63
9.1.2 Typical values 63
9.1.3 Typical curves 63
9.1.4 Loading capacitor 63
9.1.5 Pin input voltage 64
9.2 Absolute maximum ratings 64
9.3 Operating conditions 66
9.3.1 General operating conditions 66
9.3.2 Embedded reset and power control block characteristics 67
9.3.3 Supply current characteristics 68
9.3.4 Clock and timing characteristics 82
9.3.5 Memory characteristics 88
9.3.6 I/O current injection characteristics 89
9.3.7 I/O port pin characteristics 89

9.3.8 Communication interfaces 97
9.3.9 LCD controller (STM8L152xx only) 102
9.3.10 Embedded reference voltage 103
9.3.11 Temperature sensor 104
9.3.12 Comparator characteristics 104
9.3.13 12-bit DAC characteristics 106
9.3.14 12-bit ADC1 characteristics 108
9.3.15 EMC characteristics 114

10 Package information 116
10.1 ECOPACK 116
10.2 LQFP48 package information 116
10.3 UFQFPN48 package information 120
10.4 LQFP32 package information 123
10.5 UFQFPN32 package information 126
10.6 UFQFPN28 package information 129
10.7 WLCSP28 package information 132
10.8 Thermal characteristics 135

11 Part numbering 136

12 Revision history 137

List of tables

Table 1. Device summary . . . 1
Table 2. Medium-density STM8L151x4/6 and STM8L152x4/6 low-power device features and peripheral counts . . . 12
Table 3. Timer feature comparison . . . 22
Table 4. Legend/abbreviation for table 5 . . . 29
Table 5. Medium-density STM8L151x4/6, STM8L152x4/6 pin description . . . 29
Table 6. Flash and RAM boundary addresses . . . 39
Table 7. Factory conversion registers . . . 39
Table 8. I/O port hardware register map . . . 39
Table 9. General hardware register map . . . 40
Table 10. CPU/SWIM/debug module/interrupt controller registers . . . 55
Table 11. Interrupt mapping . . . 57
Table 12. Option byte addresses . . . 59
Table 13. Option byte description . . . 60
Table 14. Unique ID registers (96 bits) . . . 62
Table 15. Voltage characteristics . . . 64
Table 16. Current characteristics . . . 65
Table 17. Thermal characteristics . . . 65
Table 18. General operating conditions . . . 66
Table 19. Embedded reset and power control block characteristics . . . 67
Table 20. Total current consumption in Run mode . . . 69
Table 21. Total current consumption in Wait mode . . . 71
Table 22. Total current consumption and timing in Low power run mode at VDD = 1.65 V to 3.6 V . . . 74
Table 23. Total current consumption in Low power wait mode at VDD = 1.65 V to 3.6 V . . . 76
Table 24. Total current consumption and timing in Active-halt mode at VDD = 1.65 V to 3.6 V . . . 78
Table 25. Typical current consumption in Active-halt mode, RTC clocked by LSE external crystal . . . 80
Table 26. Total current consumption and timing in Halt mode at VDD = 1.65 to 3.6 V . . . 80
Table 27. Peripheral current consumption . . . 81
Table 28. Current consumption under external reset . . . 82
Table 29. HSE external clock characteristics . . . 82
Table 30. LSE external clock characteristics . . . 82
Table 31. HSE oscillator characteristics . . . 83
Table 32. LSE oscillator characteristics . . . 84
Table 33. HSI oscillator characteristics . . . 85
Table 34. LSI oscillator characteristics . . . 86
Table 35. RAM and hardware registers . . . 88
Table 36. Flash program and data EEPROM memory . . . 88
Table 37. I/O current injection susceptibility . . . 89
Table 38. I/O static characteristics . . . 90
Table 39. Output driving current (high sink ports) . . . 93
Table 40. Output driving current (true open drain ports) . . . 93
Table 41. Output driving current (PA0 with high sink LED driver capability) . . . 93
Table 42. NRST pin characteristics . . . 95
Table 43. SPI1 characteristics . . . 97
Table 44. I2C characteristics . . . 100
Table 45. LCD characteristics . . . 102
Table 46. Reference voltage characteristics . . . 103

Table 47. TS characteristics . . . 104
Table 48. Comparator 1 characteristics . . . 104
Table 49. Comparator 2 characteristics . . . 105
Table 50. DAC characteristics . . . 106
Table 51. DAC accuracy . . . 107
Table 52. DAC output on PB4-PB5-PB6 . . . 107
Table 53. ADC1 characteristics . . . 108
Table 54. ADC1 accuracy with VDDA = 3.3 V to 2.5 V . . . 110
Table 55. ADC1 accuracy with VDDA = 2.4 V to 3.6 V . . . 110
Table 56. ADC1 accuracy with VDDA = VREF+ = 1.8 V to 2.4 V . . . 110
Table 57. R_{AIN} max for f_{ADC} = 16 MHz . . . 112
Table 58. EMS data . . . 114
Table 59. EMI data . . . 115
Table 60. ESD absolute maximum ratings . . . 115
Table 61. Electrical sensitivities . . . 115
Table 62. LQFP48 - 48-pin, 7 x 7 mm low-profile quad flat package mechanical data . . . 117
Table 63. UFQFPN48 - 48-lead, 7 x 7 mm, 0.5 mm pitch, ultra thin fine pitch quad flat package mechanical data . . . 121
Table 64. LQFP32 - 32-pin, 7 x 7 mm low-profile quad flat package mechanical data . . . 124
Table 65. UFQFPN32 - 32-pin, 5 x 5 mm, 0.5 mm pitch ultra thin fine pitch quad flat package mechanical data . . . 127
Table 66. UFQFPN28 - 28-lead, 4 x 4 mm, 0.5 mm pitch, ultra thin fine pitch quad flat package mechanical data . . . 129
Table 67. WLCSP28 - 28-pin, 1.703 x 2.841 mm, 0.4 mm pitch wafer level chip scale package mechanical data . . . 133
Table 68. Thermal characteristics . . . 135
Table 69. Document revision history . . . 137

List of figures

Figure 1. Medium-density STM8L151x4/6 and STM8L152x4/6 device block diagram 14
Figure 2. Medium-density STM8L151x4/6 and STM8L152x4/6 clock tree diagram 19
Figure 3. STM8L151C4, STM8L151C6 48-pin pinout (without LCD). 26
Figure 4. STM8L151K4, STM8L151K6 32-pin package pinout (without LCD). 26
Figure 5. STM8L151Gx UFQFPN28 package pinout 26
Figure 6. STM8L151G4, STM8L151G6 WLCSP28 package pinout 27
Figure 7. STM8L152C4, STM8L152C6 48-pin pinout (with LCD) 27
Figure 8. STM8L152K4, STM8L152K6 32-pin package pinout (with LCD) 28
Figure 9. Memory map 38
Figure 10. Pin loading conditions. 63
Figure 11. Pin input voltage 64
Figure 12. POR/BOR thresholds 68
Figure 13. Typ. IDD(RUN) vs. VDD, fCPU = 16 MHz 70
Figure 14. Typ. IDD(Wait) vs. VDD, fCPU = 16 MHz 1). 73
Figure 15. Typ. IDD(LPR) vs. VDD (LSI clock source) 75
Figure 16. Typ. IDD(LPW) vs. VDD (LSI clock source) 77
Figure 17. HSE oscillator circuit diagram. 83
Figure 18. LSE oscillator circuit diagram 85
Figure 19. Typical HSI frequency vs V_{DD}. 86
Figure 20. Typical LSI frequency vs. VDD 87
Figure 21. Typical VIL and VIH vs VDD (high sink I/Os) 91
Figure 22. Typical VIL and VIH vs VDD (true open drain I/Os) 91
Figure 23. Typical pull-up resistance R_{PU} vs V_{DD} with VIN=VSS 92
Figure 24. Typical pull-up current I_{pu} vs V_{DD} with VIN=VSS 92
Figure 25. Typ. VOL @ VDD = 3.0 V (high sink ports) 94
Figure 26. Typ. VOL @ VDD = 1.8 V (high sink ports) 94
Figure 27. Typ. VOL @ VDD = 3.0 V (true open drain ports) 94
Figure 28. Typ. VOL @ VDD = 1.8 V (true open drain ports) 94
Figure 29. Typ. VDD - VOH @ VDD = 3.0 V (high sink ports). 94
Figure 30. Typ. VDD - VOH @ VDD = 1.8 V (high sink ports). 94
Figure 31. Typical NRST pull-up resistance R_{PU} vs V_{DD} 95
Figure 32. Typical NRST pull-up current I_{pu} vs V_{DD} 96
Figure 33. Recommended NRST pin configuration 96
Figure 34. SPI1 timing diagram - slave mode and CPHA=0 98
Figure 35. SPI1 timing diagram - slave mode and CPHA=1(1) 98
Figure 36. SPI1 timing diagram - master mode(1) 99
Figure 37. Typical application with I2C bus and timing diagram 1) 101
Figure 38. ADC1 accuracy characteristics. 111
Figure 39. Typical connection diagram using the ADC 111
Figure 40. Maximum dynamic current consumption on V_{REF+} supply pin during ADC conversion 112
Figure 41. Power supply and reference decoupling (V_{REF+} not connected to V_{DDA}). 113
Figure 42. Power supply and reference decoupling (VREF+ connected to VDDA). 113
Figure 43. LQFP48 - 48-pin, 7 x 7 mm low-profile quad flat package outline 116
Figure 44. LQFP48 - 48-pin, 7 x 7 mm low-profile quad flat package recommended footprint. 118
Figure 45. LQFP48 marking example (package top view). 119
Figure 46. UFQFPN48 - 48-lead, 7 x 7 mm, 0.5 mm pitch, ultra thin fine pitch quad flat

package outline 120
Figure 47. UFQFPN48 - 48-lead, 7 x 7 mm, 0.5 mm pitch, ultra thin fine pitch quad flat package recommended footprint 121
Figure 48. UFQFPN48 marking example (package top view) 122
Figure 49. LQFP32 - 32-pin, 7 x 7 mm low-profile quad flat package outline 123
Figure 50. LQFP32 - 32-pin, 7 x 7 mm low-profile quad flat package recommended footprint 125
Figure 51. LQFP32 marking example (package top view) 125
Figure 52. UFQFPN32 - 32-pin, 5 x 5 mm, 0.5 mm pitch ultra thin fine pitch quad flat package outline 126
Figure 53. UFQFPN32 - 32-pin, 5 x 5 mm, 0.5 mm pitch ultra thin fine pitch quad flat package recommended footprint 127
Figure 54. UFQFPN32 marking example (package top view) 128
Figure 55. UFQFPN28 - 28-lead, 4 x 4 mm, 0.5 mm pitch, ultra thin fine pitch quad flat package outline 129
Figure 56. UFQFPN28 - 28-lead, 4 x 4 mm, 0.5 mm pitch, ultra thin fine pitch quad flat package recommended footprint 130
Figure 57. UFQFPN28 marking example (package top view) 131
Figure 58. WLCSP28 - 28-pin, 1.703 x 2.841 mm, 0.4 mm pitch wafer level chip scale package outline 132
Figure 59. WLCSP28 marking example (package top view) 134
Figure 60. Medium-density STM8L15x ordering information scheme 136

1 Introduction

This document describes the features, pinout, mechanical data and ordering information of the medium-density STM8L151x4/6 and STM8L152x4/6 devices (STM8L151Cx/Kx/Gx, STM8L152Cx/Kx microcontrollers with a 16-Kbyte or 32-Kbyte Flash memory density). These devices are referred to as medium-density devices in the STM8L15x and STM8L16x reference manual (RM0031) and in the STM8L Flash programming manual (PM0054).

For more details on the whole STMicroelectronics ultra-low-power family please refer to *Section 2.2: Ultra-low-power continuum on page 13*.

For information on the debug module and SWIM (single wire interface module), refer to the STM8 SWIM communication protocol and debug module user manual (UM0470).For information on the STM8 core, please refer to the STM8 CPU programming manual (PM0044).

The medium-density devices provide the following benefits:

- Integrated system
  - Up to 32 Kbyte of medium-density embedded Flash program memory
  - 1 Kbyte of data EEPROM
  - Internal high speed and low-power low speed RC
  - Embedded reset
- Ultra-low power consumption
  - 195 µA/MHz + 440 µA (consumption)
  - 0.9 µA with LSI in Active-halt mode
  - Clock gated system and optimized power management
  - Capability to execute from RAM for Low power wait mode and Low power run mode
- Advanced features
  - Up to 16 MIPS at 16 MHz CPU clock frequency
  - Direct memory access (DMA) for memory-to-memory or peripheral-to-memory access
- Short development cycles
  - Application scalability across a common family product architecture with compatible pinout, memory map and modular peripherals
  - Wide choice of development tools

All devices offer 12-bit ADC, DAC, two comparators, Real-time clock three 16-bit timers, one 8-bit timer as well as standard communication interface such as SPI, I2C and USART. A 4x28-segment LCD is available on the medium-density STM8L152xx line. *Table 2: Medium-density STM8L151x4/6 and STM8L152x4/6 low-power device features and peripheral counts* and *Section 3: Functional overview* give an overview of the complete range of peripherals proposed in this family.

Figure 1 on page 14 shows the general block diagram of the device family.

The medium-density STM8L15x microcontroller family is suitable for a wide range of applications:

- Medical and hand-held equipment
- Application control and user interface
- PC peripherals, gaming, GPS and sport equipment
- Alarm systems, wired and wireless sensors

2 Description

The medium-density STM8L151x4/6 and STM8L152x4/6 devices are members of the STM8L ultra-low-power 8-bit family. The medium-density STM8L15x family operates from 1.8 V to 3.6 V (down to 1.65 V at power down) and is available in the -40 to +85 °C and -40 to +125 °C temperature ranges.

The medium-density STM8L15x ultra-low-power family features the enhanced STM8 CPU core providing increased processing power (up to 16 MIPS at 16 MHz) while maintaining the advantages of a CISC architecture with improved code density, a 24-bit linear addressing space and an optimized architecture for low power operations.

The family includes an integrated debug module with a hardware interface (SWIM) which allows non-intrusive In-Application debugging and ultra-fast Flash programming.

All medium-density STM8L15x microcontrollers feature embedded data EEPROM and low-power, low-voltage, single-supply program Flash memory.

They incorporate an extensive range of enhanced I/Os and peripherals.

The modular design of the peripheral set allows the same peripherals to be found in different ST microcontroller families including 32-bit families. This makes any transition to a different family very easy, and simplified even more by the use of a common set of development tools.

Six different packages are proposed from 28 to 48 pins. Depending on the device chosen, different sets of peripherals are included.

All STM8L ultra-low-power products are based on the same architecture with the same memory mapping and a coherent pinout.

2.1 Device overview

Table 2. Medium-density STM8L151x4/6 and STM8L152x4/6 low-power device features and peripheral counts

Features		STM8L151Gx		STM8L15xKx		STM8L15xCx	
Flash (Kbyte)		16	32	16	32	16	32
Data EEPROM (Kbyte)		1					
RAM (Kbyte)		2					
LCD		No		4x17 (1)		4x28 (1)	
Timers	Basic	1 (8-bit)					
	General purpose	2 (16-bit)					
	Advanced control	1 (16-bit)					
Communication interfaces	SPI	1					
	I2C	1					
	USART	1					
GPIOs		26(3)		30 (2)(3) or 29 (1)(3)		41(3)	
12-bit synchronized ADC (number of channels)		1 (18)		1 (22 (2) or 21 (1))		1 (25)	
12-Bit DAC (number of channels)		1 (1)					
Comparators COMP1/COMP2		2					
Others		RTC, window watchdog, independent watchdog, 16-MHz and 38-kHz internal RC, 1- to 16-MHz and 32-kHz external oscillator					
CPU frequency		16 MHz					
Operating voltage		1.8 V to 3.6 V (down to 1.65 V at power down)					
Operating temperature		-40 to +85 °C/ -40 to +105 °C / -40 to +125 °C					
Packages		UFQFPN28 (4x4; 0.6 mm thickness) WLCSP28		LQFP32(7x7) UFQFPN32 (5x5; 0.6 mm thickness)		LQFP48 UFQFPN48 (4x4; 0.6 mm thickness)	

1. STM8L152xx versions only
2. STM8L151xx versions only
3. The number of GPIOs given in this table includes the NRST/PA1 pin but the application can use the NRST/PA1 pin as general purpose output only (PA1).

2.2 Ultra-low-power continuum

The ultra-low-power medium-densitySTM8L151x4/6 and STM8L152x4/6 devices are fully pin-to-pin, software and feature compatible. Besides the full compatibility within the family, the devices are part of STMicroelectronics microcontrollers ultra-low-power strategy which also includes STM8L101xx and STM8L15xxx. The STM8L and STM32L families allow a continuum of performance, peripherals, system architecture, and features.

They are all based on STMicroelectronics 0.13 µm ultra-low leakage process.

Note: 1 The STM8L151xx and STM8L152xx are pin-to-pin compatible with STM8L101xx devices.

2 The STM32L family is pin-to-pin compatible with the general purpose STM32F family. Please refer to STM32L15x documentation for more information on these devices.

Performance

All families incorporate highly energy-efficient cores with both Harvard architecture and pipelined execution: advanced STM8 core for STM8L families and ARM® Cortex®-M3 core for STM32L family. In addition specific care for the design architecture has been taken to optimize the mA/DMIPS and mA/MHz ratios.

This allows the ultra-low-power performance to range from 5 up to 33.3 DMIPs.

Shared peripherals

STM8L151xx/152xx and STM8L15xxx share identical peripherals which ensure a very easy migration from one family to another:

- Analog peripherals: ADC1, DAC, and comparators COMP1/COMP2
- Digital peripherals: RTC and some communication interfaces

Common system strategy

To offer flexibility and optimize performance, the STM8L151xx/152xx and STM8L15xxx devices use a common architecture:

- Same power supply range from 1.8 to 3.6 V, down to 1.65 V at power down
- Architecture optimized to reach ultra-low consumption both in low power modes and Run mode
- Fast startup strategy from low power modes
- Flexible system clock
- Ultra-safe reset: same reset strategy for both STM8L15x and STM32L15xxx including power-on reset, power-down reset, brownout reset and programmable voltage detector.

Features

ST ultra-low-power continuum also lies in feature compatibility:

- More than 10 packages with pin count from 20 to 100 pins and size down to 3 x 3 mm
- Memory density ranging from 4 to 128 Kbyte

3 Functional overview

Figure 1. Medium-density STM8L151x4/6 and STM8L152x4/6 device block diagram

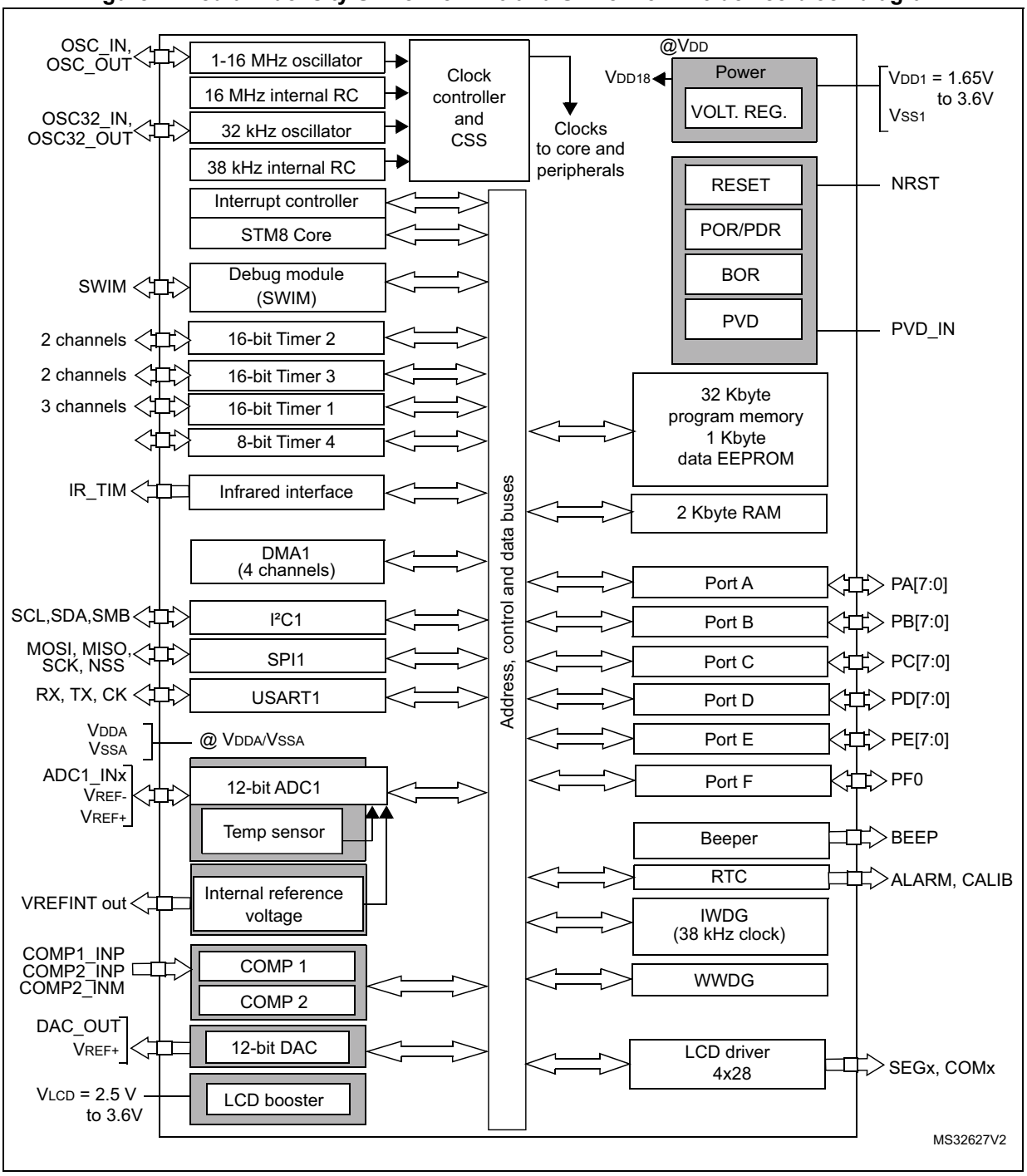

1. **Legend**:
   ADC: Analog-to-digital converter
   BOR: Brownout reset
   DMA: Direct memory access
   DAC: Digital-to-analog converter
   I²C: Inter-integrated circuit multi master interface

IWDG: Independent watchdog
LCD: Liquid crystal display
POR/PDR: Power on reset / power down reset
RTC: Real-time clock
SPI: Serial peripheral interface
SWIM: Single wire interface module
USART: Universal synchronous asynchronous receiver transmitter
WWDG: Window watchdog

3.1 Low-power modes

The medium-density STM8L151x4/6 and STM8L152x4/6 devices support five low power modes to achieve the best compromise between low power consumption, short startup time and available wakeup sources:

- **Wait mode**: The CPU clock is stopped, but selected peripherals keep running. An internal or external interrupt, event or a Reset can be used to exit the microcontroller from Wait mode (WFE or WFI mode). Wait consumption: refer to *Table 21*.
- **Low power run mode**: The CPU and the selected peripherals are running. Execution is done from RAM with a low speed oscillator (LSI or LSE). Flash and data EEPROM are stopped and the voltage regulator is configured in ultra-low-power mode. The microcontroller enters Low power run mode by software and can exit from this mode by software or by a reset.
  All interrupts must be masked. They cannot be used to exit the microcontroller from this mode. Low power run mode consumption: refer to *Table 22*.
- **Low power wait mode:** This mode is entered when executing a Wait for event in Low power run mode. It is similar to Low power run mode except that the CPU clock is stopped. The wakeup from this mode is triggered by a Reset or by an internal or external event (peripheral event generated by the timers, serial interfaces, DMA controller (DMA1), comparators and I/O ports). When the wakeup is triggered by an event, the system goes back to Low power run mode.
  All interrupts must be masked. They cannot be used to exit the microcontroller from this mode. Low power wait mode consumption: refer to *Table 23*.
- **Active-halt mode**: CPU and peripheral clocks are stopped, except RTC. The wakeup can be triggered by RTC interrupts, external interrupts or reset. Active-halt consumption: refer to *Table 24* and *Table 25*.
- **Halt mode**: CPU and peripheral clocks are stopped, the device remains powered on. The RAM content is preserved. The wakeup is triggered by an external interrupt or reset. A few peripherals have also a wakeup from Halt capability. Switching off the internal reference voltage reduces power consumption. Through software configuration it is also possible to wake up the device without waiting for the internal reference voltage wakeup time to have a fast wakeup time of 5 µs. Halt consumption: refer to *Table 26*.

3.2 Central processing unit STM8

3.2.1 Advanced STM8 Core

The 8-bit STM8 core is designed for code efficiency and performance with an Harvard architecture and a 3-stage pipeline.

It contains 6 internal registers which are directly addressable in each execution context, 20 addressing modes including indexed indirect and relative addressing, and 80 instructions.

Architecture and registers

- Harvard architecture
- 3-stage pipeline
- 32-bit wide program memory bus - single cycle fetching most instructions
- X and Y 16-bit index registers - enabling indexed addressing modes with or without offset and read-modify-write type data manipulations
- 8-bit accumulator
- 24-bit program counter - 16 Mbyte linear memory space
- 16-bit stack pointer - access to a 64 Kbyte level stack
- 8-bit condition code register - 7 condition flags for the result of the last instruction

Addressing

- 20 addressing modes
- Indexed indirect addressing mode for lookup tables located anywhere in the address space
- Stack pointer relative addressing mode for local variables and parameter passing

Instruction set

- 80 instructions with 2-byte average instruction size
- Standard data movement and logic/arithmetic functions
- 8-bit by 8-bit multiplication
- 16-bit by 8-bit and 16-bit by 16-bit division
- Bit manipulation
- Data transfer between stack and accumulator (push/pop) with direct stack access
- Data transfer using the X and Y registers or direct memory-to-memory transfers

3.2.2 Interrupt controller

The medium-density STM8L151x4/6 and STM8L152x4/6 feature a nested vectored interrupt controller:

- Nested interrupts with 3 software priority levels
- 32 interrupt vectors with hardware priority
- Up to 40 external interrupt sources on 11 vectors
- Trap and reset interrupts

3.3 Reset and supply management

3.3.1 Power supply scheme

The device requires a 1.65 V to 3.6 V operating supply voltage (V_{DD}). The external power supply pins must be connected as follows:

- V_{SS1}; V_{DD1} = 1.8 to 3.6 V, down to 1.65 V at power down: external power supply for I/Os and for the internal regulator. Provided externally through V_{DD1} pins, the corresponding ground pin is V_{SS1}.
- $V_{SSA;}$ V_{DDA} = 1.8 to 3.6 V, down to 1.65 V at power down: external power supplies for analog peripherals (minimum voltage to be applied to V_{DDA} is 1.8 V when the ADC1 is used). V_{DDA} and V_{SSA} must be connected to V_{DD1} and V_{SS1}, respectively.
- V_{SS2}; V_{DD2} = 1.8 to 3.6 V, down to 1.65 V at power down: external power supplies for I/Os. V_{DD2} and V_{SS2} must be connected to V_{DD1} and V_{SS1}, respectively.
- V_{REF+}; V_{REF-} (for ADC1): external reference voltage for ADC1. Must be provided externally through V_{REF+} and V_{REF-} pin.
- V_{REF+} (for DAC): external voltage reference for DAC must be provided externally through V_{REF+}.

3.3.2 Power supply supervisor

The device has an integrated ZEROPOWER power-on reset (POR)/power-down reset (PDR), coupled with a brownout reset (BOR) circuitry. At power-on, BOR is always active, and ensures proper operation starting from 1.8 V. After the 1.8 V BOR threshold is reached, the option byte loading process starts, either to confirm or modify default thresholds, or to disable BOR permanently (in which case, the V_{DD} min value at power down is 1.65 V).

Five BOR thresholds are available through option bytes, starting from 1.8 V to 3 V. To reduce the power consumption in Halt mode, it is possible to automatically switch off the internal reference voltage (and consequently the BOR) in Halt mode. The device remains under reset when V_{DD} is below a specified threshold, $V_{POR/PDR}$ or V_{BOR}, without the need for any external reset circuit.

The device features an embedded programmable voltage detector (PVD) that monitors the V_{DD}/V_{DDA} power supply and compares it to the V_{PVD} threshold. This PVD offers 7 different levels between 1.85 V and 3.05 V, chosen by software, with a step around 200 mV. An interrupt can be generated when V_{DD}/V_{DDA} drops below the V_{PVD} threshold and/or when V_{DD}/V_{DDA} is higher than the V_{PVD} threshold. The interrupt service routine can then generate a warning message and/or put the MCU into a safe state. The PVD is enabled by software.

3.3.3 Voltage regulator

The medium-density STM8L151x4/6 and STM8L152x4/6 embeds an internal voltage regulator for generating the 1.8 V power supply for the core and peripherals.

This regulator has two different modes:

- Main voltage regulator mode (MVR) for Run, Wait for interrupt (WFI) and Wait for event (WFE) modes.
- Low power voltage regulator mode (LPVR) for Halt, Active-halt, Low power run and Low power wait modes.

When entering Halt or Active-halt modes, the system automatically switches from the MVR to the LPVR in order to reduce current consumption.

3.4 Clock management

The clock controller distributes the system clock (SYSCLK) coming from different oscillators to the core and the peripherals. It also manages clock gating for low power modes and ensures clock robustness.

Features

- **Clock prescaler:** to get the best compromise between speed and current consumption the clock frequency to the CPU and peripherals can be adjusted by a programmable prescaler
- **Safe clock switching:** Clock sources can be changed safely on the fly in run mode through a configuration register.
- **Clock management:** To reduce power consumption, the clock controller can stop the clock to the core, individual peripherals or memory.
- **System clock sources:** 4 different clock sources can be used to drive the system clock:
  - 1-16 MHz High speed external crystal (HSE)
  - 16 MHz High speed internal RC oscillator (HSI)
  - 32.768 kHz Low speed external crystal (LSE)
  - 38 kHz Low speed internal RC (LSI)
- **RTC and LCD clock sources:** the above four sources can be chosen to clock the RTC and the LCD, whatever the system clock.
- **Startup clock:** After reset, the microcontroller restarts by default with an internal 2 MHz clock (HSI/8). The prescaler ratio and clock source can be changed by the application program as soon as the code execution starts.
- **Clock security system (CSS):** This feature can be enabled by software. If a HSE clock failure occurs, the system clock is automatically switched to HSI.
- **Configurable main clock output (CCO):** This outputs an external clock for use by the application.

Figure 2. Medium-density STM8L151x4/6 and STM8L152x4/6 clock tree diagram

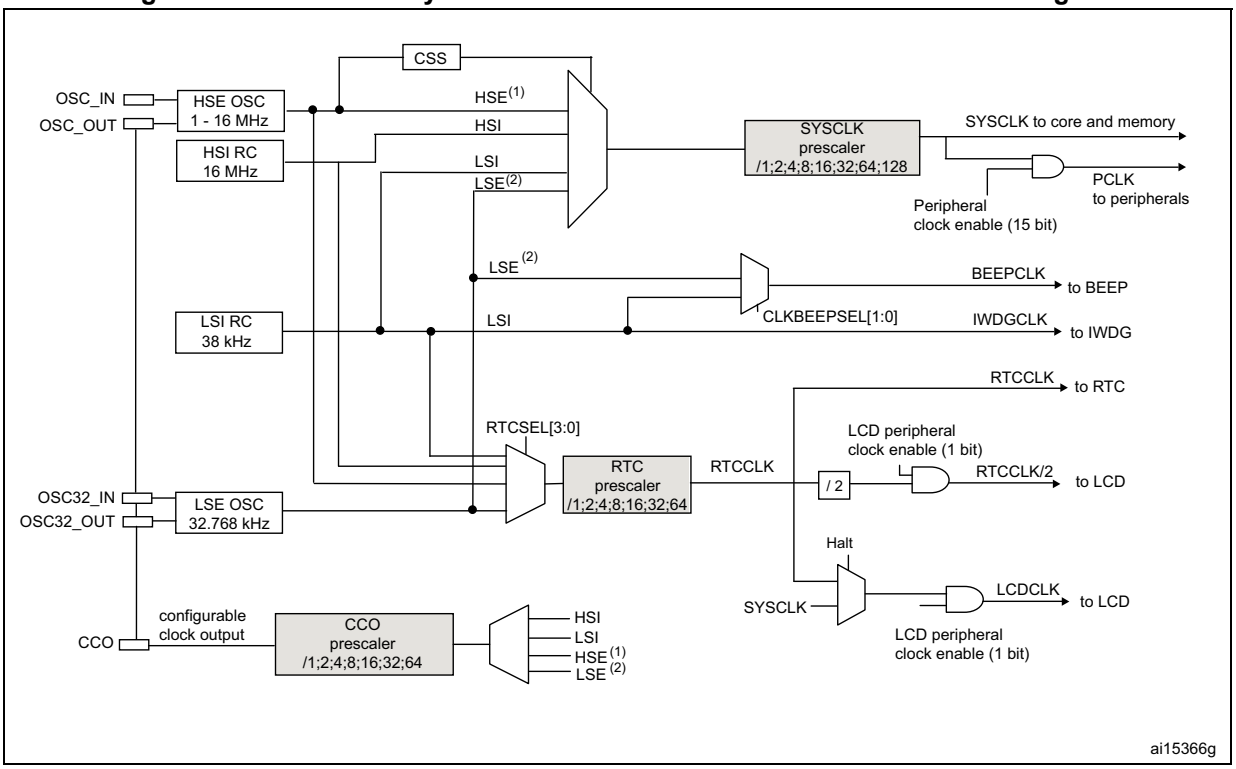

1. The HSE clock source can be either an external crystal/ceramic resonator or an external source (HSE bypass). Refer to *Section HSE clock* in the STM8L15x and STM8L16x reference manual (RM0031).
2. The LSE clock source can be either an external crystal/ceramic resonator or a external source (LSE bypass). Refer to *Section LSE clock* in the STM8L15x and STM8L16x reference manual (RM0031).

3.5 Low power real-time clock

The real-time clock (RTC) is an independent binary coded decimal (BCD) timer/counter.

Six byte locations contain the second, minute, hour (12/24 hour), week day, date, month, year, in BCD (binary coded decimal) format. Correction for 28, 29 (leap year), 30, and 31 day months are made automatically.

It provides a programmable alarm and programmable periodic interrupts with wakeup from Halt capability.

- Periodic wakeup time using the 32.768 kHz LSE with the lowest resolution (of 61 µs) is from min. 122 µs to max. 3.9 s. With a different resolution, the wakeup time can reach 36 hours
- Periodic alarms based on the calendar can also be generated from every second to every year

3.6 LCD (Liquid crystal display)

The liquid crystal display drives up to 4 common terminals and up to 28 segment terminals to drive up to 112 pixels.

- Internal step-up converter to guarantee contrast control whatever V_{DD}.
- Static 1/2, 1/3, 1/4 duty supported.
- Static 1/2, 1/3 bias supported.
- Phase inversion to reduce power consumption and EMI.
- Up to 4 pixels which can programmed to blink.
- The LCD controller can operate in Halt mode.

Note: Unnecessary segments and common pins can be used as general I/O pins.

3.7 Memories

The medium-density STM8L151x4/6 and STM8L152x4/6 devices have the following main features:

- Up to 2 Kbyte of RAM
- The non-volatile memory is divided into three arrays:
  - Up to 32 Kbyte of medium-density embedded Flash program memory
  - 1 Kbyte of data EEPROM
  - Option bytes.

The EEPROM embeds the error correction code (ECC) feature. It supports the read-while-write (RWW): it is possible to execute the code from the program matrix while programming/erasing the data matrix.

The option byte protects part of the Flash program memory from write and readout piracy.

3.8 DMA

A 4-channel direct memory access controller (DMA1) offers a memory-to-memory and peripherals-from/to-memory transfer capability. The 4 channels are shared between the following IPs with DMA capability: ADC1, DAC, I2C1, SPI1, USART1, the four Timers.

3.9 Analog-to-digital converter

- 12-bit analog-to-digital converter (ADC1) with 25 channels (including 1 fast channel), temperature sensor and internal reference voltage
- Conversion time down to 1 µs with f_{SYSCLK}= 16 MHz
- Programmable resolution
- Programmable sampling time
- Single and continuous mode of conversion
- Scan capability: automatic conversion performed on a selected group of analog inputs
- Analog watchdog
- Triggered by timer

Note: ADC1 can be served by DMA1.

3.10 Digital-to-analog converter (DAC)

- 12-bit DAC with output buffer
- Synchronized update capability using TIM4
- DMA capability
- External triggers for conversion
- Input reference voltage V_{REF+} for better resolution

Note: DAC can be served by DMA1.

3.11 Ultra-low-power comparators

The medium-density STM8L151x4/6 and STM8L152x4/6 embed two comparators (COMP1 and COMP2) sharing the same current bias and voltage reference. The voltage reference can be internal or external (coming from an I/O).

- One comparator with fixed threshold (COMP1).
- One comparator rail to rail with fast or slow mode (COMP2). The threshold can be one of the following:
  - DAC output
  - External I/O
  - Internal reference voltage or internal reference voltage sub multiple (1/4, 1/2, 3/4)

The two comparators can be used together to offer a window function. They can wake up from Halt mode.

3.12 System configuration controller and routing interface

The system configuration controller provides the capability to remap some alternate functions on different I/O ports. TIM4 and ADC1 DMA channels can also be remapped.

The highly flexible routing interface allows application software to control the routing of different I/Os to the TIM1 timer input captures. It also controls the routing of internal analog signals to ADC1, COMP1, COMP2, DAC and the internal reference voltage V_{REFINT}. It also provides a set of registers for efficiently managing the charge transfer acquisition sequence (*Section 3.13: Touch sensing*).

3.13 Touch sensing

Medium-density STM8L151x4/6 and STM8L152x4/6 devices provide a simple solution for adding capacitive sensing functionality to any application. Capacitive sensing technology is able to detect finger presence near an electrode which is protected from direct touch by a dielectric (example, glass, plastic). The capacitive variation introduced by a finger (or any conductive object) is measured using a proven implementation based on a surface charge transfer acquisition principle. It consists of charging the electrode capacitance and then transferring a part of the accumulated charges into a sampling capacitor until the voltage across this capacitor has reached a specific threshold. In medium-density STM8L151x4/6

and STM8L152x4/6 devices, the acquisition sequence is managed by software and it involves analog I/O groups and the routing interface.

Reliable touch sensing solutions can be quickly and easily implemented using the free STM8 Touch Sensing Library.

3.14 Timers

Medium-density STM8L151x4/6 and STM8L152x4/6devices contain one advanced control timer (TIM1), two 16-bit general purpose timers (TIM2 and TIM3) and one 8-bit basic timer (TIM4).

All the timers can be served by DMA1.

Table 3 compares the features of the advanced control, general-purpose and basic timers.

Table 3. Timer feature comparison

<table>
<tr><th>Timer</th><th>Counter resolution</th><th>Counter type</th><th>Prescaler factor</th><th>DMA1 request generation</th><th>Capture/compare channels</th><th>Complementary outputs</th></tr>
<tr><td>TIM1</td><td rowspan="3">16-bit</td><td rowspan="3">up/down</td><td>Any integer from 1 to 65536</td><td rowspan="4">Yes</td><td>3 + 1</td><td>3</td></tr>
<tr><td>TIM2</td><td rowspan="2">Any power of 2 from 1 to 128</td><td rowspan="2">2</td><td rowspan="3">None</td></tr>
<tr><td>TIM3</td></tr>
<tr><td>TIM4</td><td>8-bit</td><td>up</td><td>Any power of 2 from 1 to 32768</td><td>0</td></tr>
</table>

3.14.1 TIM1 - 16-bit advanced control timer

This is a high-end timer designed for a wide range of control applications. With its complementary outputs, dead-time control and center-aligned PWM capability, the field of applications is extended to motor control, lighting and half-bridge driver.

- 16-bit up, down and up/down autoreload counter with 16-bit prescaler
- 3 independent capture/compare channels (CAPCOM) configurable as input capture, output compare, PWM generation (edge and center aligned mode) and single pulse mode output
- 1 additional capture/compare channel which is not connected to an external I/O
- Synchronization module to control the timer with external signals
- Break input to force timer outputs into a defined state
- 3 complementary outputs with adjustable dead time
- Encoder mode
- Interrupt capability on various events (capture, compare, overflow, break, trigger)

3.14.2 16-bit general purpose timers

- 16-bit autoreload (AR) up/down-counter
- 7-bit prescaler adjustable to fixed power of 2 ratios (1…128)
- 2 individually configurable capture/compare channels
- PWM mode
- Interrupt capability on various events (capture, compare, overflow, break, trigger)
- Synchronization with other timers or external signals (external clock, reset, trigger and enable)

3.14.3 8-bit basic timer

The 8-bit timer consists of an 8-bit up auto-reload counter driven by a programmable prescaler. It can be used for timebase generation with interrupt generation on timer overflow or for DAC trigger generation.

3.15 Watchdog timers

The watchdog system is based on two independent timers providing maximum security to the applications.

3.15.1 Window watchdog timer

The window watchdog (WWDG) is used to detect the occurrence of a software fault, usually generated by external interferences or by unexpected logical conditions, which cause the application program to abandon its normal sequence.

3.15.2 Independent watchdog timer

The independent watchdog peripheral (IWDG) can be used to resolve processor malfunctions due to hardware or software failures.

It is clocked by the internal LSI RC clock source, and thus stays active even in case of a CPU clock failure.

3.16 Beeper

The beeper function outputs a signal on the BEEP pin for sound generation. The signal is in the range of 1, 2 or 4 kHz.

3.17 Communication interfaces

3.17.1 SPI

The serial peripheral interface (SPI1) provides half/ full duplex synchronous serial communication with external devices.

- Maximum speed: 8 Mbit/s ($f_{SYSCLK}/2$) both for master and slave
- Full duplex synchronous transfers
- Simplex synchronous transfers on 2 lines with a possible bidirectional data line
- Master or slave operation - selectable by hardware or software
- Hardware CRC calculation
- Slave/master selection input pin

Note: SPI1 can be served by the DMA1 Controller.

3.17.2 I²C

The I^2C bus interface (I^2C1) provides multi-master capability, and controls all I²C bus-specific sequencing, protocol, arbitration and timing.

- Master, slave and multi-master capability
- Standard mode up to 100 kHz and fast speed modes up to 400 kHz.
- 7-bit and 10-bit addressing modes.
- SMBus 2.0 and PMBus support
- Hardware CRC calculation

Note: I^2C1 can be served by the DMA1 Controller.

3.17.3 USART

The USART interface (USART1) allows full duplex, asynchronous communications with external devices requiring an industry standard NRZ asynchronous serial data format. It offers a very wide range of baud rates.

- 1 Mbit/s full duplex SCI
- SPI1 emulation
- High precision baud rate generator
- SmartCard emulation
- IrDA SIR encoder decoder
- Single wire half duplex mode

Note: USART1 can be served by the DMA1 Controller.

3.18 Infrared (IR) interface

The medium-density STM8L151x4/6 and STM8L152x4/6 devices contain an infrared interface which can be used with an IR LED for remote control functions. Two timer output compare channels are used to generate the infrared remote control signals.

3.19 Development support

Development tools

Development tools for the STM8 microcontrollers include:

- The STice emulation system offering tracing and code profiling
- The STVD high-level language debugger including C compiler, assembler and integrated development environment
- The STVP Flash programming software

The STM8 also comes with starter kits, evaluation boards and low-cost in-circuit debugging/programming tools.

Single wire data interface (SWIM) and debug module

The debug module with its single wire data interface (SWIM) permits non-intrusive real-time in-circuit debugging and fast memory programming.

The single-wire interface is used for direct access to the debugging module and memory programming. The interface can be activated in all device operation modes.

The non-intrusive debugging module features a performance close to a full-featured emulator. Beside memory and peripherals, CPU operation can also be monitored in real-time by means of shadow registers.

Bootloader

A bootloader is available to reprogram the Flash memory using the USART1 interface. The reference document for the bootloader is *UM0560: STM8 bootloader user manual*.

4 Pinout and pin description

Figure 3. STM8L151C4, STM8L151C6 48-pin pinout (without LCD)

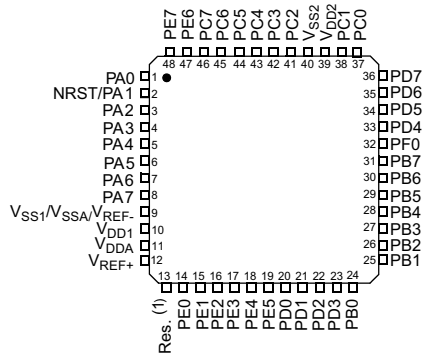

1. Reserved. Must be tied to V_{DD}.

Figure 4. STM8L151K4, STM8L151K6 32-pin package pinout (without LCD)

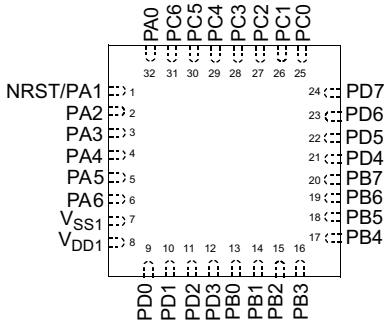

1. Example given for the UFQFPN32 package. The pinout is the same for the LQFP32 package.

Figure 5. STM8L151Gx UFQFPN28 package pinout

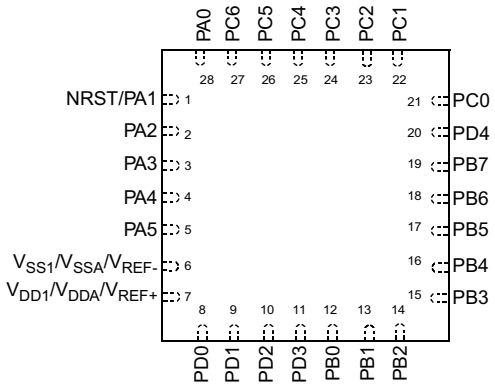

Figure 6. STM8L151G4, STM8L151G6 WLCSP28 package pinout

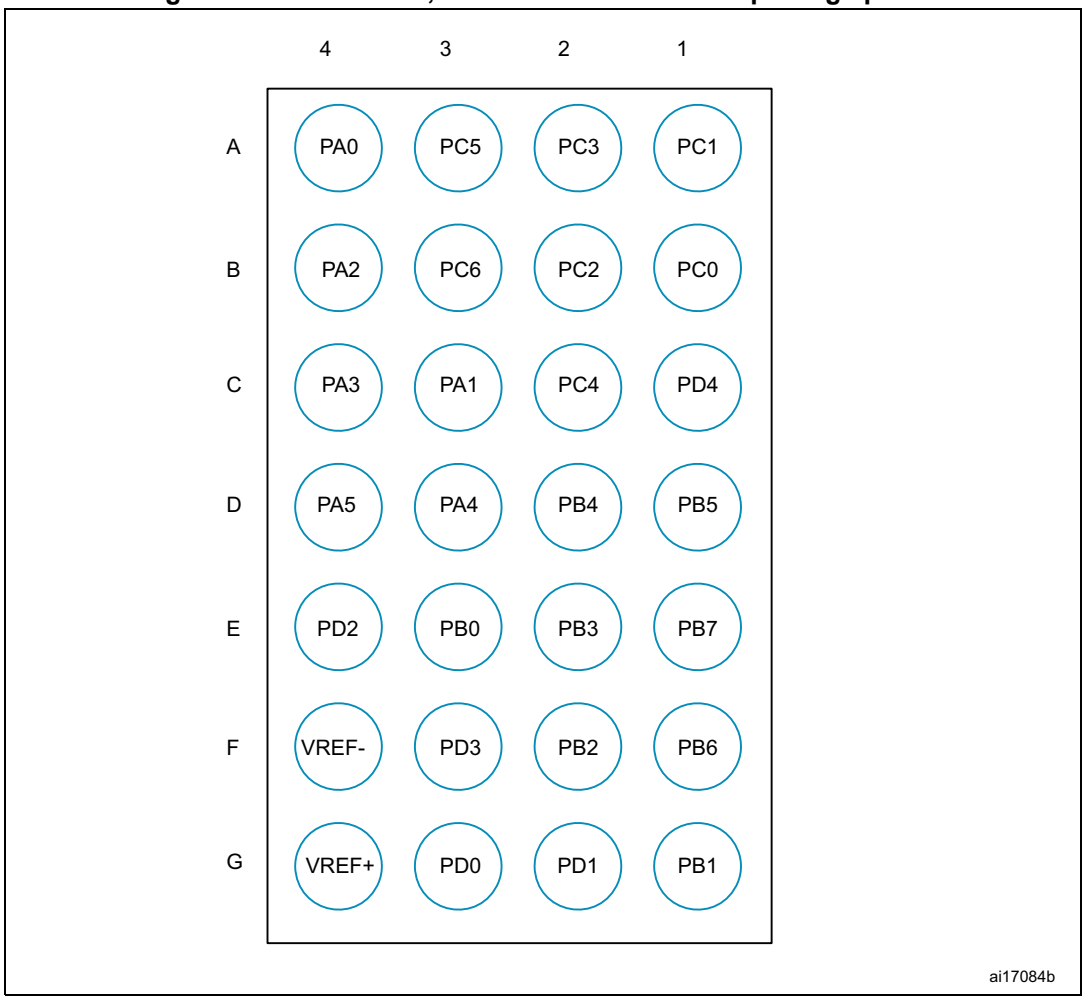

Figure 7. STM8L152C4, STM8L152C6 48-pin pinout (with LCD)

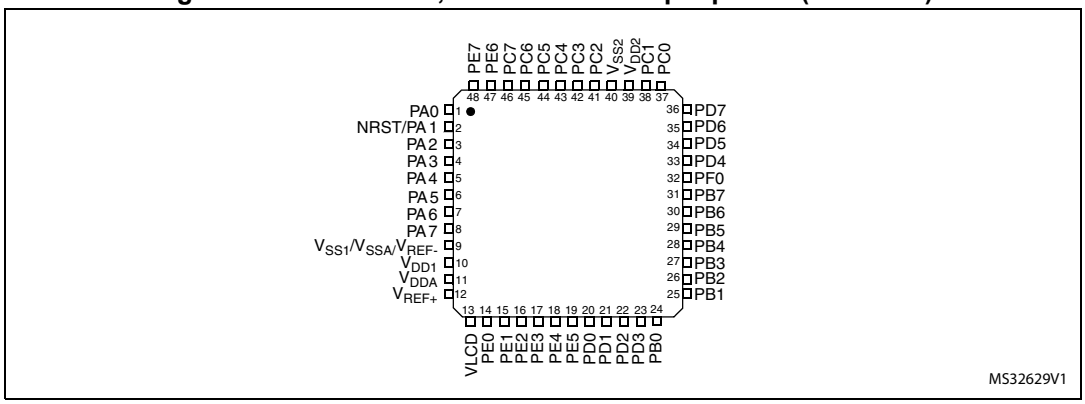

Figure 8. STM8L152K4, STM8L152K6 32-pin package pinout (with LCD)

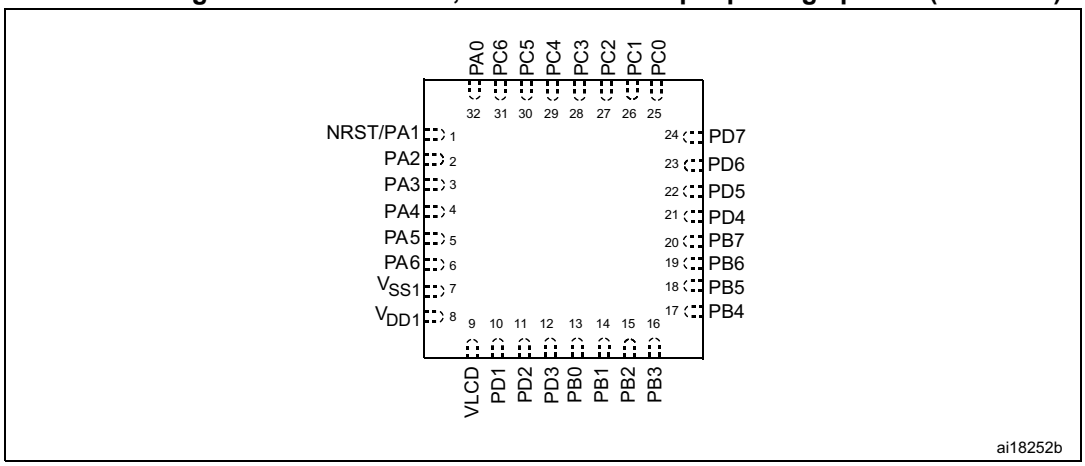

1. Example given for the UFQFPN32 package. The pinout is the same for the LQFP32 package.

Table 4. Legend/abbreviation for table 5

Type	I= input, O = output, S = power supply	
Level	FT	Five-volt tolerant
	TT	3.6 V tolerant
	Output	HS = high sink/source (20 mA)
Port and control configuration	Input	float = floating, wpu = weak pull-up
	Output	T = true open drain, OD = open drain, PP = push pull
Reset state	Bold X (pin state after reset release). Unless otherwise specified, the pin state is the same during the reset phase (i.e. “under reset”) and after internal reset release (i.e. at reset state).	

Table 5. Medium-density STM8L151x4/6, STM8L152x4/6 pin description

Pin number				Pin name	Type	I/O level	Input			Output			Main function (after reset)	Default alternate function
LQFP48/UFQFPN48	LQFP32/UFQFPN32	UFQFPN28	WLCSP28				floating	wpu	Ext. interrupt	High sink/source	OD	PP		
2	1	1	C3	NRST/PA1(1)	I/O			**X**		HS		X	**Reset**	PA1
3	2	2	B4	PA2/OSC_IN/ *[USART1_TX]*(4)/ *[SPI1_MISO]* (4)	I/O		**X**	X	X	HS	X	X	**Port A2**	HSE oscillator input / *[USART1 transmit] / [SPI1 master in- slave out] /*
4	3	3	C4	PA3/OSC_OUT/*[USART1 _RX]*(4)/*[SPI1_MOSI]*(4)	I/O		**X**	X	X	HS	X	X	**Port A3**	HSE oscillator output / *[USART1 receive]/ [SPI1 master out/slave in]/*
5	-	-	-	PA4/TIM2_BKIN/ LCD_COM0(2)/ADC1_IN2/ COMP1_INP	I/O	TT (3)	**X**	X	X	HS	X	X	**Port A4**	Timer 2 - break input / LCD COM 0 / ADC1 input 2 / Comparator 1 positive input
-	4	4	D3	PA4/TIM2_BKIN/ *[TIM2_ETR]*(4)/ LCD_COM0(2)/ ADC1_IN2/COMP1_INP	I/O	TT (3)	**X**	X	X	HS	X	X	**Port A4**	Timer 2 - break input / *[Timer 2 - external trigger]* / LCD_COM 0 / ADC1 input 2 / Comparator 1 positive input
6	-	-	-	PA5/TIM3_BKIN/ LCD_COM1(2)/ADC1_IN1/ COMP1_INP	I/O	TT (3)	**X**	X	X	HS	X	X	**Port A5**	Timer 3 - break input / LCD_COM 1 / ADC1 input 1/ Comparator 1 positive input

Table 5. Medium-density STM8L151x4/6, STM8L152x4/6 pin description (continued)

Pin number				Pin name	Type	I/O level	Input			Output			Main function (after reset)	Default alternate function
LQFP48/UFQFPN48	LQFP32/UFQFPN32	UFQFPN28	WLCSP28				floating	wpu	Ext. interrupt	High sink/source	OD	PP		
-	5	5	D4	PA5/TIM3_BKIN/ *[TIM3_ETR]*(4)/ LCD_COM1(2)/ADC1_IN1/ COMP1_INP	I/O	TT (3)	**X**	X	X	HS	X	X	**Port A5**	Timer 3 - break input / *[Timer 3 - external trigger]* / LCD_COM 1 / ADC1 input 1 / Comparator 1 positive input
7	6	-	-	PA6/*[ADC1_TRIG]*(4)/ LCD_COM2(2)/ADC1_IN0/ COMP1_INP	I/O	TT (3)	**X**	X	X	HS	X	X	**Port A6**	*[ADC1 - trigger]* / LCD_COM2 / ADC1 input 0 / Comparator 1 positive input
8	-	-	-	PA7/LCD_SEG0(2)(5)	I/O	FT	**X**	X	X	HS	X	X	**Port A7**	LCD segment 0
24	13	12	E3	PB0(6)/TIM2_CH1/ LCD_SEG10(2)/ ADC1_IN18/COMP1_INP	I/O	TT (3)	**X**(6)	X(6)	X	HS	X	X	**Port B0**	Timer 2 - channel 1 / LCD segment 10 / ADC1_IN18 / Comparator 1 positive input
25	14	13	G1	PB1/TIM3_CH1/ LCD_SEG11(2)/ ADC1_IN17/COMP1_INP	I/O	TT (3)	**X**	X	X	HS	X	X	**Port B1**	Timer 3 - channel 1 / LCD segment 11 / ADC1_IN17 / Comparator 1 positive input
26	15	14	F2	PB2/ TIM2_CH2/ LCD_SEG12(2)/ ADC1_IN16/COMP1_INP	I/O	TT (3)	**X**	X	X	HS	X	X	**Port B2**	Timer 2 - channel 2 / LCD segment 12 / ADC1_IN16/ Comparator 1 positive input
27	-	-	-	PB3/TIM2_ETR/ LCD_SEG13(2)/ ADC1_IN15/COMP1_INP	I/O	TT (3)	**X**	X	X	HS	X	X	**Port B3**	Timer 2 - external trigger / LCD segment 13 /ADC1_IN15 / Comparator 1 positive input

Table 5. Medium-density STM8L151x4/6, STM8L152x4/6 pin description (continued)

Pin number				Pin name	Type	I/O level	Input			Output			Main function (after reset)	Default alternate function
LQFP48/UFQFPN48	LQFP32/UFQFPN32	UFQFPN28	WLCSP28				floating	wpu	Ext. interrupt	High sink/source	OD	PP		
-	16	-	-	PB3/*[TIM2_ETR]*(4)/ TIM1_CH2N/LCD_SEG13 (2)/ADC1_IN15/ COMP1_INP	I/O	TT (3)	**X**	X	X	HS	X	X	**Port B3**	*[Timer 2 - external trigger]* / Timer 1 inverted channel 2 / LCD segment 13 / ADC1_IN15 / Comparator 1 positive input
-	-	15	E2	PB3/*[TIM2_ETR]*(4)/ TIM1_CH1N/ LCD_SEG13(2)/ ADC1_IN15/RTC_ALARM /COMP1_INP	I/O	TT (3)	**X**	X	X	HS	X	X	**Port B3**	*[Timer 2 - external trigger]* / Timer 1 inverted channel 1/ LCD segment 13 / ADC1_IN15 / RTC alarm/ Comparator 1 positive input
28	-	-	-	PB4(6)/*[SPI1_NSS]*(4)/ LCD_SEG14(2)/ ADC1_IN14/COMP1_INP	I/O	TT (3)	**X**(6)	X(6)	X	HS	X	X	**Port B4**	*[SPI1 master/slave select]* / LCD segment 14 / ADC1_IN14 / Comparator 1 positive input
-	17	16	D2	PB4(6)/*[SPI1_NSS]*(4)/ LCD_SEG14(2)/ ADC1_IN14/ COMP1_INP/DAC_OUT	I/O	TT (3)	**X**(6)	X(6)	X	HS	X	X	**Port B4**	*[SPI1 master/slave select]* / LCD segment 14 / ADC1_IN14 / DAC output / Comparator 1 positive input
29	-	-	-	PB5/*[SPI1_SCK]*(4)/ LCD_SEG15(2)/ ADC1_IN13/COMP1_INP	I/O	TT (3)	**X**	X	X	HS	X	X	**Port B5**	*[SPI1 clock]* / LCD segment 15 / ADC1_IN13 / Comparator 1 positive input
-	18	17	D1	PB5/*[SPI1_SCK]*(4)/ LCD_SEG15(2)/ ADC1_IN13/DAC_OUT/ COMP1_INP	I/O	TT (3)	**X**	X	X	HS	X	X	**Port B5**	*[SPI1 clock]* / LCD segment 15 / ADC1_IN13 / DAC output/ Comparator 1 positive input

Table 5. Medium-density STM8L151x4/6, STM8L152x4/6 pin description (continued)

Pin number				Pin name	Type	I/O level	Input			Output			Main function (after reset)	Default alternate function
LQFP48/UFQFPN48	LQFP32/UFQFPN32	UFQFPN28	WLCSP28				floating	wpu	Ext. interrupt	High sink/source	OD	PP		
30	-	-	-	PB6/[*SPI1_MOSI*](4)/ LCD_SEG16(2)/ ADC1_IN12/COMP1_INP	I/O	TT (3)	**X**	X	X	HS	X	X	**Port B6**	*[SPI1 master out/slave in]*/ LCD segment 16 / ADC1_IN12 / Comparator 1 positive input
-	19	18	F1	PB6/*[SPI1_MOSI]*(4)/ LCD_SEG16(2)/ ADC1_IN12/COMP1_INP/ DAC_OUT	I/O	TT (3)	**X**	X	X	HS	X	X	**Port B6**	*[SPI1 master out]*/ slave in / LCD segment 16 / ADC1_IN12 / DAC output / Comparator 1 positive input
31	20	19	E1	PB7/*[SPI1_MISO]*(4)/ LCD_SEG17(2)/ ADC1_IN11/COMP1_INP	I/O	TT (3)	**X**	X	X	HS	X	X	**Port B7**	*[SPI1 master in- slave out]* / LCD segment 17 / ADC1_IN11 / Comparator 1 positive input
37	25	21	B1	PC0(5)/I2C1_SDA	I/O	FT	**X**		X		T(7)		**Port C0**	I2C1 data
38	26	22	A1	PC1(5)/I2C1_SCL	I/O	FT	**X**		X		T(7)		**Port C1**	I2C1 clock
41	27	23	B2	PC2/USART1_RX/ LCD_SEG22/ADC1_IN6/ COMP1_INP/VREFINT	I/O	TT (3)	**X**	X	X	HS	X	X	**Port C2**	USART1 receive / LCD segment 22 / ADC1_IN6 / Comparator 1 positive input / Internal voltage reference output
42	28	24	A2	PC3/USART1_TX/ LCD_SEG23(2)/ ADC1_IN5/COMP1_INP/ COMP2_INM	I/O	TT (3)	**X**	X	X	HS	X	X	**Port C3**	USART1 transmit / LCD segment 23 / ADC1_IN5 / Comparator 1 positive input / Comparator 2 negative input
43	29	25	C2	PC4/USART1_CK/ I2C1_SMB/CCO/ LCD_SEG24(2)/ ADC1_IN4/COMP2_INM/ COMP1_INP	I/O	TT (3)	**X**	X	X	HS	X	X	**Port C4**	USART1 synchronous clock / I2C1_SMB / Configurable clock output / LCD segment 24 / ADC1_IN4 / Comparator 2 negative input / Comparator 1 positive input

Table 5. Medium-density STM8L151x4/6, STM8L152x4/6 pin description (continued)

Pin number				Pin name	Type	I/O level	Input			Output			Main function (after reset)	Default alternate function
LQFP48/UFQFPN48	LQFP32/UFQFPN32	UFQFPN28	WLCSP28				floating	wpu	Ext. interrupt	High sink/source	OD	PP		
44	30	26	A3	PC5/OSC32_IN /*[SPI1_NSS]*(4)/ *[USART1_TX]*(4)	I/O		**X**	X	X	HS	X	X	**Port C5**	LSE oscillator input / *[SPI1 master/slave select] / [USART1 transmit]*
45	31	27	B3	PC6/OSC32_OUT/ *[SPI1_SCK]*(4)/ *[USART1_RX]*(4)	I/O		**X**	X	X	HS	X	X	**Port C6**	LSE oscillator output / *[SPI1 clock] / [USART1 receive]*
46	-	-	-	PC7/LCD_SEG25(2)/ ADC1_IN3/COMP2_INM/ COMP1_INP	I/O	TT (3)	**X**	X	X	HS	X	X	**Port C7**	LCD segment 25 /ADC1_IN3/ Comparator negative input / Comparator 1 positive input
20	-	8	G3	PD0/TIM3_CH2/ *[ADC1_TRIG]*(4)/ LCD_SEG7(2)/ADC1_IN22/COMP2_INP/ COMP1_INP	I/O	TT (3)	**X**	X	X	HS	X	X	**Port D0**	Timer 3 - channel 2 / *[ADC1_Trigger]* / LCD segment 7 / ADC1_IN22 / Comparator 2 positive input / Comparator 1 positive input
-	9	-	-	PD0/TIM3_CH2/ *[ADC1_TRIG]*(4)/ ADC1_IN22/COMP2_INP/ COMP1_INP	I/O	TT (3)	**X**	X	X	HS	X	X	**Port D0(8)**	Timer 3 - channel 2 / *[ADC1_Trigger]* / ADC1_IN22 / Comparator 2 positive input / Comparator 1 positive input
21	-	-	-	PD1/TIM3_ETR/ LCD_COM3(2)/ ADC1_IN21/COMP2_INP/ COMP1_INP	I/O	TT (3)	**X**	X	X	HS	X	X	**Port D1**	Timer 3 - external trigger / LCD_COM3 / ADC1_IN21 / comparator 2 positive input / Comparator 1 positive input
-	10	-	-	PD1/TIM1_CH3N/[*TIM3_ETR*](4)/ LCD_COM3(2)/ ADC1_IN21/COMP2_INP/ COMP1_INP	I/O	TT (3)	**X**	X	X	HS	X	X	**Port D1**	*[Timer 3 - external trigger]/* TIM1 inverted channel 3 / LCD_COM3/ ADC1_IN21 / Comparator 2 positive input / Comparator 1 positive input

Table 5. Medium-density STM8L151x4/6, STM8L152x4/6 pin description (continued)

Pin number				Pin name	Type	I/O level	Input			Output			Main function (after reset)	Default alternate function
LQFP48/UFQFPN48	LQFP32/UFQFPN32	UFQFPN28	WLCSP28				floating	wpu	Ext. interrupt	High sink/source	OD	PP		
-	-	9	G2	PD1/TIM1_CH3/[*TIM3_ETR*](4)/LCD_COM3(2)/ ADC1_IN21/COMP2_INP/ COMP1_INP	I/O	TT (3)	**X**	X	X	HS	X	X	**Port D1**	Timer 1 channel 3 / *[Timer 3 - external trigger]* / LCD_COM3/ ADC1_IN21 / Comparator 2 positive input / Comparator 1 positive input
22	11	10	E4	PD2/TIM1_CH1 /LCD_SEG8(2)/ ADC1_IN20/COMP1_INP	I/O	TT (3)	**X**	X	X	HS	X	X	**Port D2**	Timer 1 - channel 1 / LCD segment 8 / ADC1_IN20 / Comparator 1 positive input
23	12	-	-	PD3/ TIM1_ETR/ LCD_SEG9(2)/ADC1_IN19/COMP1_INP	I/O	TT (3)	**X**	X	X	HS	X	X	**Port D3**	Timer 1 - external trigger / LCD segment 9 / ADC1_IN19 / Comparator 1 positive input
-	-	11	F3	PD3/ TIM1_ETR/ LCD_SEG9(2)/ ADC1_IN19/TIM1_BKIN/ COMP1_INP/ RTC_CALIB	I/O	TT (3)	**X**	X	X	HS	X	X	**Port D3**	Timer 1 - external trigger / LCD segment 9 / ADC1_IN19 / Timer 1 break input / RTC calibration / Comparator 1 positive input
33	21	20	C1	PD4/TIM1_CH2 /LCD_SEG18(2)/ ADC1_IN10/COMP1_INP	I/O	TT (3)	**X**	X	X	HS	X	X	**Port D4**	Timer 1 - channel 2 / LCD segment 18 / ADC1_IN10/ Comparator 1 positive input
34	22	-	-	PD5/TIM1_CH3 /LCD_SEG19(2)/ ADC1_IN9/COMP1_INP	I/O	TT (3)	**X**	X	X	HS	X	X	**Port D5**	Timer 1 - channel 3 / LCD segment 19 / ADC1_IN9/ Comparator 1 positive input
35	23	-	-	PD6/TIM1_BKIN /LCD_SEG20(2)/ ADC1_IN8/RTC_CALIB/ /VREFINT/ COMP1_INP	I/O	TT (3)	**X**	X	X	HS	X	X	**Port D6**	Timer 1 - break input / LCD segment 20 / ADC1_IN8 / RTC calibration / Internal voltage reference output / Comparator 1 positive input

Table 5. Medium-density STM8L151x4/6, STM8L152x4/6 pin description (continued)

Pin number				Pin name	Type	I/O level	Input			Output			Main function (after reset)	Default alternate function
LQFP48/UFQFPN48	LQFP32/UFQFPN32	UFQFPN28	WLCSP28				floating	wpu	Ext. interrupt	High sink/source	OD	PP		
36	24	-	-	PD7/TIM1_CH1N /LCD_SEG21(2)/ ADC1_IN7/RTC_ALARM/ VREFINT/ COMP1_INP	I/O	TT (3)	**X**	X	X	HS	X	X	**Port D7**	Timer 1 - inverted channel 1/ LCD segment 21 / ADC1_IN7 / RTC alarm / Internal voltage reference output /Comparator 1 positive input
14	-	-	-	PE0(5)/LCD_SEG1(2)	I/O	FT	**X**	X	X	HS	X	X	**Port E0**	LCD segment 1
15	-	-	-	PE1/TIM1_CH2N /LCD_SEG2(2)	I/O	TT (3)	**X**	X	X	HS	X	X	**Port E1**	Timer 1 - inverted channel 2 / LCD segment 2
16	-	-	-	PE2/TIM1_CH3N /LCD_SEG3(2)	I/O	TT (3)	**X**	X	X	HS	X	X	**Port E2**	Timer 1 - inverted channel 3 / LCD segment 3
17	-	-	-	PE3/LCD_SEG4(2)	I/O	TT (3)	**X**	X	X	HS	X	X	**Port E3**	LCD segment 4
18	-	-	-	PE4/LCD_SEG5(2)	I/O	TT (3)	**X**	X	X	HS	X	X	**Port E4**	LCD segment 5
19	-	-	-	PE5/LCD_SEG6(2)/ ADC1_IN23/COMP2_INP/ COMP1_INP	I/O	TT (3)	**X**	X	X	HS	X	X	**Port E5**	LCD segment 6 / ADC1_IN23 / Comparator 2 positive input / Comparator 1 positive input
47	-	-	-	PE6/LCD_SEG26(2)/ PVD_IN	I/O	TT (3)	**X**	X	X	HS	X	X	**Port E6**	LCD segment 26/PVD_IN
48	-	-	-	PE7/LCD_SEG27(2)	I/O	TT (3)	**X**	X	X	HS	X	X	**Port E7**	LCD segment 27
32	-	-	-	PF0/ADC1_IN24/ DAC_OUT	I/O	TT (3)	**X**	X	X	HS	X	X	**Port F0**	ADC1_IN24 / DAC_OUT
13	9	-	-	VLCD(2)	S	-	-	-	-	-	-	-	LCD booster external capacitor	
13	-	-	-	Reserved(8)	-	-	-	-	-	-	-	-	Reserved. Must be tied to V_{DD}	
10	-	-	-	V_{DD}	S	-	-	-	-	-	-	-	Digital power supply	
11	-	-	-	V_{DDA}	S	-	-	-	-	-	-	-	Analog supply voltage	
12	-	-	-	V_{REF+}	S	-	-	-	-	-	-	-	ADC1 and DAC positive voltage reference	

Table 5. Medium-density STM8L151x4/6, STM8L152x4/6 pin description (continued)

Pin number				Pin name	Type	I/O level	Input			Output			Main function (after reset)	Default alternate function
LQFP48/UFQFPN48	LQFP32/UFQFPN32	UFQFPN28	WLCSP28				floating	wpu	Ext. interrupt	High sink/source	OD	PP		
-	8	7	G4	$V_{DD1}/V_{DDA}/V_{REF+}$	S	-	-	-	-	-	-	-	Digital power supply / Analog supply voltage / ADC1 positive voltage reference	
9	7	6	F4	$V_{SS1}/V_{SSA}/V_{REF-}$	S	-	-	-	-	-	-	-	I/O ground / Analog ground voltage / ADC1 negative voltage reference	
39	-	-	-	V_{DD2}	S	-	-	-	-	-	-	-	IOs supply voltage	
40	-	-	-	V_{SS2}	S	-	-	-	-	-	-	-	IOs ground voltage	
1	32	28	A4	PA0(9)/*[USART1_CK]*(4)/ SWIM/BEEP/IR_TIM (10)	I/O		X	**X**(9)	X	HS (10)	X	X	**Port A0**	*[USART1 synchronous clock]*(4) / SWIM input and output / Beep output / Infrared Timer output

1. At power-up, the PA1/NRST pin is a reset input pin with pull-up. To be used as a general purpose pin (PA1), it can be configured only as output open-drain or push-pull, not as a general purpose input. Refer to Section *Configuring NRST/PA1 pin as general purpose output* in the STM8L15x and STM8L16x reference manual (RM0031).
2. Available on STM8L152xx devices only.
3. In the 3.6 V tolerant I/Os, protection diode to V_{DD} is not implemented.
4. [ ] Alternate function remapping option (if the same alternate function is shown twice, it indicates an exclusive choice not a duplication of the function).
5. In the 5 V tolerant I/Os, protection diode to V_{DD} is not implemented.
6. A pull-up is applied to PB0 and PB4 during the reset phase. These two pins are input floating after reset release.
7. In the open-drain output column, 'T' defines a true open-drain I/O (P-buffer, weak pull-up and protection diode to V_{DD} are not implemented).
8. Available on STM8L151xx devices only.
9. The PA0 pin is in input pull-up during the reset phase and after reset release.
10. High Sink LED driver capability available on PA0.

Note: The slope control of all GPIO pins, except true open drain pins, can be programmed. By default, the slope control is limited to 2 MHz.

4.1 System configuration options

As shown in *Table 5: Medium-density STM8L151x4/6, STM8L152x4/6 pin description*, some alternate functions can be remapped on different I/O ports by programming one of the two remapping registers described in the “Routing interface (RI) and system configuration controller” section in the STM8L15xxx and STM8L16xxx reference manual (RM0031).

5 Memory and register map

5.1 Memory mapping

The memory map is shown in *Figure 9*.

Figure 9. Memory map

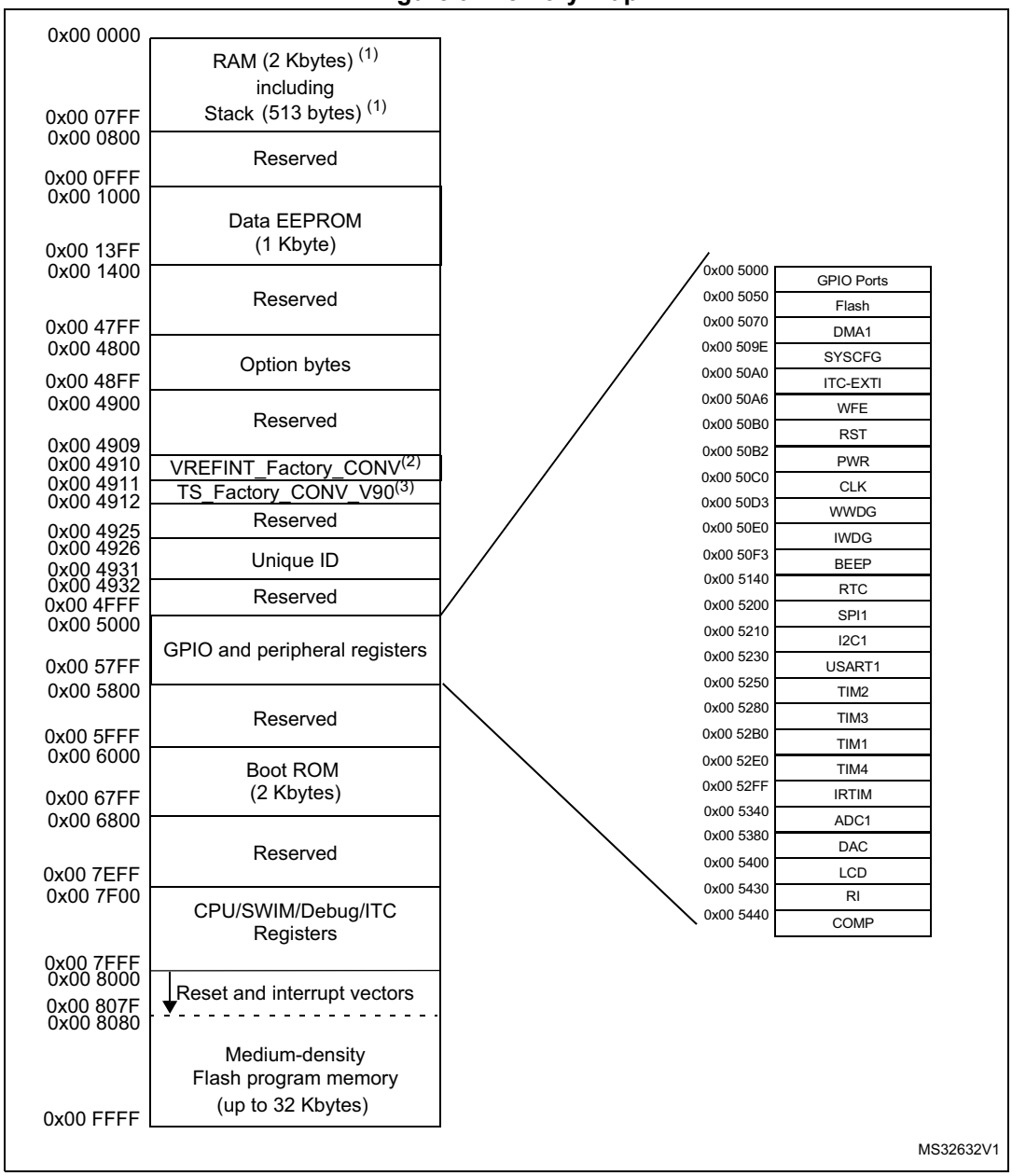

1. *Table 6* lists the boundary addresses for each memory size. The top of the stack is at the RAM end address.
2. The VREFINT_Factory_CONV byte represents the LSB of the V_{REFINT} 12-bit ADC conversion result. The MSB have a fixed value: 0x6.
3. The TS_Factory_CONV_V90 byte represents the LSB of the V_{90} 12-bit ADC conversion result. The MSB

have a fixed value: 0x3.

4. Refer to *Table 9* for an overview of hardware register mapping, to *Table 8* for details on I/O port hardware registers, and to *Table 10* for information on CPU/SWIM/debug module controller registers.

Table 6. Flash and RAM boundary addresses

Memory area	Size	Start address	End address
RAM	2 Kbyte	0x00 0000	0x00 07FF
Flash program memory	16 Kbyte	0x00 8000	0x00 BFFF
	32 Kbyte	0x00 8000	0x00 FFFF

5.2 Register map

Table 7. Factory conversion registers

Address	Block	Register label	Register name	Reset status
0x00 4910	-	VREFINT_Factory_CONV(1)	Internal reference voltage factory conversion	0xXX
0x00 4911	-	TS_Factory_CONV_V90(2)	Temperature sensor output voltage	0xXX

1. The VREFINT_Factory_CONV byte represents the 8 LSB of the result of the VREFINT 12-bit ADC conversion performed in factory. The MSB have a fixed value: 0x6.
2. The TS_Factory_CONV_V90 byte represents the 8 LSB of the result of the V90 12-bit ADC conversion performed in factory. The 2 MSB have a fixed value: 0x3.

Table 8. I/O port hardware register map

Address	Block	Register label	Register name	Reset status
0x00 5000	Port A	PA_ODR	Port A data output latch register	0x00
0x00 5001		PA_IDR	Port A input pin value register	0xXX
0x00 5002		PA_DDR	Port A data direction register	0x00
0x00 5003		PA_CR1	Port A control register 1	0x01
0x00 5004		PA_CR2	Port A control register 2	0x00
0x00 5005	Port B	PB_ODR	Port B data output latch register	0x00
0x00 5006		PB_IDR	Port B input pin value register	0xXX
0x00 5007		PB_DDR	Port B data direction register	0x00
0x00 5008		PB_CR1	Port B control register 1	0x00
0x00 5009		PB_CR2	Port B control register 2	0x00

Table 8. I/O port hardware register map (continued)

Address	Block	Register label	Register name	Reset status
0x00 500A	Port C	PC_ODR	Port C data output latch register	0x00
0x00 500B		PC_IDR	Port C input pin value register	0xXX
0x00 500C		PC_DDR	Port C data direction register	0x00
0x00 500D		PC_CR1	Port C control register 1	0x00
0x00 500E		PC_CR2	Port C control register 2	0x00
0x00 500F	Port D	PD_ODR	Port D data output latch register	0x00
0x00 5010		PD_IDR	Port D input pin value register	0xXX
0x00 5011		PD_DDR	Port D data direction register	0x00
0x00 5012		PD_CR1	Port D control register 1	0x00
0x00 5013		PD_CR2	Port D control register 2	0x00
0x00 5014	Port E	PE_ODR	Port E data output latch register	0x00
0x00 5015		PE_IDR	Port E input pin value register	0xXX
0x00 5016		PE_DDR	Port E data direction register	0x00
0x00 5017		PE_CR1	Port E control register 1	0x00
0x00 5018		PE_CR2	Port E control register 2	0x00
0x00 5019	Port F	PF_ODR	Port F data output latch register	0x00
0x00 501A		PF_IDR	Port F input pin value register	0xXX
0x00 501B		PF_DDR	Port F data direction register	0x00
0x00 501C		PF_CR1	Port F control register 1	0x00
0x00 501D		PF_CR2	Port F control register 2	0x00

Table 9. General hardware register map

Address	Block	Register label	Register name	Reset status
0x00 501E to 0x00 5049	Reserved area (28 bytes)			
0x00 5050	Flash	FLASH_CR1	Flash control register 1	0x00
0x00 5051		FLASH_CR2	Flash control register 2	0x00
0x00 5052		FLASH _PUKR	Flash program memory unprotection key register	0x00
0x00 5053		FLASH _DUKR	Data EEPROM unprotection key register	0x00
0x00 5054		FLASH _IAPSR	Flash in-application programming status register	0x00

Table 9. General hardware register map (continued)

Address	Block	Register label	Register name	Reset status
0x00 5055 to 0x00 506F	Reserved area (27 bytes)			
0x00 5070	DMA1	DMA1_GCSR	DMA1 global configuration & status register	0xFC
0x00 5071		DMA1_GIR1	DMA1 global interrupt register 1	0x00
0x00 5072 to 0x00 5074		Reserved area (3 bytes)		
0x00 5075		DMA1_C0CR	DMA1 channel 0 configuration register	0x00
0x00 5076		DMA1_C0SPR	DMA1 channel 0 status & priority register	0x00
0x00 5077		DMA1_C0NDTR	DMA1 number of data to transfer register (channel 0)	0x00
0x00 5078		DMA1_C0PARH	DMA1 peripheral address high register (channel 0)	0x52
0x00 5079		DMA1_C0PARL	DMA1 peripheral address low register (channel 0)	0x00
0x00 507A		Reserved area (1 byte)		
0x00 507B		DMA1_C0M0ARH	DMA1 memory 0 address high register (channel 0)	0x00
0x00 507C		DMA1_C0M0ARL	DMA1 memory 0 address low register (channel 0)	0x00
0x00 507D to 0x00 507E		Reserved area (2 bytes)		
0x00 507F		DMA1_C1CR	DMA1 channel 1 configuration register	0x00
0x00 5080		DMA1_C1SPR	DMA1 channel 1 status & priority register	0x00
0x00 5081		DMA1_C1NDTR	DMA1 number of data to transfer register (channel 1)	0x00
0x00 5082		DMA1_C1PARH	DMA1 peripheral address high register (channel 1)	0x52
0x00 5083		DMA1_C1PARL	DMA1 peripheral address low register (channel 1)	0x00

Table 9. General hardware register map (continued)

Address	Block	Register label	Register name	Reset status
0x00 5084	DMA1	Reserved area (1 byte)		
0x00 5085		DMA1_C1M0ARH	DMA1 memory 0 address high register (channel 1)	0x00
0x00 5086		DMA1_C1M0ARL	DMA1 memory 0 address low register (channel 1)	0x00
0x00 5087 0x00 5088		Reserved area (2 bytes)		
0x00 5089		DMA1_C2CR	DMA1 channel 2 configuration register	0x00
0x00 508A		DMA1_C2SPR	DMA1 channel 2 status & priority register	0x00
0x00 508B		DMA1_C2NDTR	DMA1 number of data to transfer register (channel 2)	0x00
0x00 508C		DMA1_C2PARH	DMA1 peripheral address high register (channel 2)	0x52
0x00 508D		DMA1_C2PARL	DMA1 peripheral address low register (channel 2)	0x00
0x00 508E		Reserved area (1 byte)		
0x00 508F		DMA1_C2M0ARH	DMA1 memory 0 address high register (channel 2)	0x00
0x00 5090		DMA1_C2M0ARL	DMA1 memory 0 address low register (channel 2)	0x00
0x00 5091 0x00 5092		Reserved area (2 bytes)		
0x00 5093		DMA1_C3CR	DMA1 channel 3 configuration register	0x00
0x00 5094		DMA1_C3SPR	DMA1 channel 3 status & priority register	0x00
0x00 5095		DMA1_C3NDTR	DMA1 number of data to transfer register (channel 3)	0x00
0x00 5096		DMA1_C3PARH_ C3M1ARH	DMA1 peripheral address high register (channel 3)	0x40
0x00 5097		DMA1_C3PARL_ C3M1ARL	DMA1 peripheral address low register (channel 3)	0x00
0x00 5098		Reserved area (1 byte)		
0x00 5099		DMA1_C3M0ARH	DMA1 memory 0 address high register (channel 3)	0x00
0x00 509A		DMA1_C3M0ARL	DMA1 memory 0 address low register (channel 3)	0x00
0x00 509B to 0x00 509D		Reserved area (3 bytes)		
0x00 509E	SYSCFG	SYSCFG_RMPCR1	Remapping register 1	0x00
0x00 509F		SYSCFG_RMPCR2	Remapping register 2	0x00

Table 9. General hardware register map (continued)

Address	Block	Register label	Register name	Reset status
0x00 50A0	ITC - EXTI	EXTI_CR1	External interrupt control register 1	0x00
0x00 50A1		EXTI_CR2	External interrupt control register 2	0x00
0x00 50A2		EXTI_CR3	External interrupt control register 3	0x00
0x00 50A3		EXTI_SR1	External interrupt status register 1	0x00
0x00 50A4		EXTI_SR2	External interrupt status register 2	0x00
0x00 50A5		EXTI_CONF1	External interrupt port select register 1	0x00
0x00 50A6	WFE	WFE_CR1	WFE control register 1	0x00
0x00 50A7		WFE_CR2	WFE control register 2	0x00
0x00 50A8		WFE_CR3	WFE control register 3	0x00
0x00 50A9 to 0x00 50AF	Reserved area (7 bytes)			
0x00 50B0	RST	RST_CR	Reset control register	0x00
0x00 50B1		RST_SR	Reset status register	0x01
0x00 50B2	PWR	PWR_CSR1	Power control and status register 1	0x00
0x00 50B3		PWR_CSR2	Power control and status register 2	0x00
0x00 50B4 to 0x00 50BF	Reserved area (12 bytes)			
0x00 50C0	CLK	CLK_DIVR	Clock master divider register	0x03
0x00 50C1		CLK_CRTCR	Clock RTC register	0x00
0x00 50C2		CLK_ICKR	Internal clock control register	0x11
0x00 50C3		CLK_PCKENR1	Peripheral clock gating register 1	0x00
0x00 50C4		CLK_PCKENR2	Peripheral clock gating register 2	0x80
0x00 50C5		CLK_CCOR	Configurable clock control register	0x00
0x00 50C6		CLK_ECKR	External clock control register	0x00
0x00 50C7		CLK_SCSR	System clock status register	0x01
0x00 50C8		CLK_SWR	System clock switch register	0x01
0x00 50C9		CLK_SWCR	Clock switch control register	0bxxxx0000
0x00 50CA		CLK_CSSR	Clock security system register	0x00
0x00 50CB		CLK_CBEEPR	Clock BEEP register	0x00
0x00 50CC		CLK_HSICALR	HSI calibration register	0xxx
0x00 50CD		CLK_HSITRIMR	HSI clock calibration trimming register	0x00
0x00 50CE		CLK_HSIUNLCKR	HSI unlock register	0x00
0x00 50CF		CLK_REGCSR	Main regulator control status register	0bxx11100x

Table 9. General hardware register map (continued)

Address	Block	Register label	Register name	Reset status
0x00 50D0 to 0x00 50D2	Reserved area (3 bytes)			
0x00 50D3	WWDG	WWDG_CR	WWDG control register	0x7F
0x00 50D4		WWDG_WR	WWDR window register	0x7F
0x00 50D5 to 00 50DF	Reserved area (11 bytes)			
0x00 50E0	IWDG	IWDG_KR	IWDG key register	0xXX
0x00 50E1		IWDG_PR	IWDG prescaler register	0x00
0x00 50E2		IWDG_RLR	IWDG reload register	0xFF
0x00 50E3 to 0x00 50EF	Reserved area (13 bytes)			
0x00 50F0	BEEP	BEEP_CSR1	BEEP control/status register 1	0x00
0x00 50F1 0x00 50F2		Reserved area (2 bytes)		
0x00 50F3		BEEP_CSR2	BEEP control/status register 2	0x1F
0x00 50F4 to 0x00 513F	Reserved area (76 bytes)			

Table 9. General hardware register map (continued)

Address	Block	Register label	Register name	Reset status
0x00 5140	RTC	RTC_TR1	Time register 1	0x00
0x00 5141		RTC_TR2	Time register 2	0x00
0x00 5142		RTC_TR3	Time register 3	0x00
0x00 5143		Reserved area (1 byte)		
0x00 5144		RTC_DR1	Date register 1	0x01
0x00 5145		RTC_DR2	Date register 2	0x21
0x00 5146		RTC_DR3	Date register 3	0x00
0x00 5147		Reserved area (1 byte)		
0x00 5148		RTC_CR1	Control register 1	0x00
0x00 5149		RTC_CR2	Control register 2	0x00
0x00 514A		RTC_CR3	Control register 3	0x00
0x00 514B		Reserved area (1 byte)		
0x00 514C		RTC_ISR1	Initialization and status register 1	0x00
0x00 514D		RTC_ISR2	Initialization and Status register 2	0x00
0x00 514E 0x00 514F		Reserved area (2 bytes)		
0x00 5150		RTC_SPRERH(1)	Synchronous prescaler register high	0x00(1)
0x00 5151		RTC_SPRERL(1)	Synchronous prescaler register low	0xFF(1)
0x00 5152		RTC_APRER(1)	Asynchronous prescaler register	0x7F(1)
0x00 5153		Reserved area (1 byte)		
0x00 5154		RTC_WUTRH(1)	Wakeup timer register high	0xFF(1)
0x00 5155		RTC_WUTRL(1)	Wakeup timer register low	0xFF(1)
0x00 5156 to 0x00 5158		Reserved area (3 bytes)		
0x00 5159		RTC_WPR	Write protection register	0x00
0x00 515A 0x00 515B		Reserved area (2 bytes)		
0x00 515C		RTC_ALRMAR1	Alarm A register 1	0x00
0x00 515D		RTC_ALRMAR2	Alarm A register 2	0x00
0x00 515E		RTC_ALRMAR3	Alarm A register 3	0x00
0x00 515F		RTC_ALRMAR4	Alarm A register 4	0x00
0x00 5160 to 0x00 51FF	Reserved area (160 bytes)			

Table 9. General hardware register map (continued)

Address	Block	Register label	Register name	Reset status
0x00 5200	SPI1	SPI1_CR1	SPI1 control register 1	0x00
0x00 5201		SPI1_CR2	SPI1 control register 2	0x00
0x00 5202		SPI1_ICR	SPI1 interrupt control register	0x00
0x00 5203		SPI1_SR	SPI1 status register	0x02
0x00 5204		SPI1_DR	SPI1 data register	0x00
0x00 5205		SPI1_CRCPR	SPI1 CRC polynomial register	0x07
0x00 5206		SPI1_RXCRCR	SPI1 Rx CRC register	0x00
0x00 5207		SPI1_TXCRCR	SPI1 Tx CRC register	0x00
0x00 5208 to 0x00 520F	Reserved area (8 bytes)			
0x00 5210	I2C1	I2C1_CR1	I2C1 control register 1	0x00
0x00 5211		I2C1_CR2	I2C1 control register 2	0x00
0x00 5212		I2C1_FREQR	I2C1 frequency register	0x00
0x00 5213		I2C1_OARL	I2C1 own address register low	0x00
0x00 5214		I2C1_OARH	I2C1 own address register high	0x00
0x00 5215		Reserved (1 byte)		
0x00 5216		I2C1_DR	I2C1 data register	0x00
0x00 5217		I2C1_SR1	I2C1 status register 1	0x00
0x00 5218		I2C1_SR2	I2C1 status register 2	0x00
0x00 5219		I2C1_SR3	I2C1 status register 3	0x0x
0x00 521A		I2C1_ITR	I2C1 interrupt control register	0x00
0x00 521B		I2C1_CCRL	I2C1 clock control register low	0x00
0x00 521C		I2C1_CCRH	I2C1 clock control register high	0x00
0x00 521D		I2C1_TRISER	I2C1 TRISE register	0x02
0x00 521E		I2C1_PECR	I2C1 packet error checking register	0x00
0x00 521F to 0x00 522F	Reserved area (17 bytes)			

Table 9. General hardware register map (continued)

Address	Block	Register label	Register name	Reset status
0x00 5230	USART1	USART1_SR	USART1 status register	0xC0
0x00 5231		USART1_DR	USART1 data register	undefined
0x00 5232		USART1_BRR1	USART1 baud rate register 1	0x00
0x00 5233		USART1_BRR2	USART1 baud rate register 2	0x00
0x00 5234		USART1_CR1	USART1 control register 1	0x00
0x00 5235		USART1_CR2	USART1 control register 2	0x00
0x00 5236		USART1_CR3	USART1 control register 3	0x00
0x00 5237		USART1_CR4	USART1 control register 4	0x00
0x00 5238		USART1_CR5	USART1 control register 5	0x00
0x00 5239		USART1_GTR	USART1 guard time register	0x00
0x00 523A		USART1_PSCR	USART1 prescaler register	0x00
0x00 523B to 0x00 524F	Reserved area (21 bytes)			

Table 9. General hardware register map (continued)

Address	Block	Register label	Register name	Reset status
0x00 5250	TIM2	TIM2_CR1	TIM2 control register 1	0x00
0x00 5251		TIM2_CR2	TIM2 control register 2	0x00
0x00 5252		TIM2_SMCR	TIM2 Slave mode control register	0x00
0x00 5253		TIM2_ETR	TIM2 external trigger register	0x00
0x00 5254		TIM2_DER	TIM2 DMA1 request enable register	0x00
0x00 5255		TIM2_IER	TIM2 interrupt enable register	0x00
0x00 5256		TIM2_SR1	TIM2 status register 1	0x00
0x00 5257		TIM2_SR2	TIM2 status register 2	0x00
0x00 5258		TIM2_EGR	TIM2 event generation register	0x00
0x00 5259		TIM2_CCMR1	TIM2 capture/compare mode register 1	0x00
0x00 525A		TIM2_CCMR2	TIM2 capture/compare mode register 2	0x00
0x00 525B		TIM2_CCER1	TIM2 capture/compare enable register 1	0x00
0x00 525C		TIM2_CNTRH	TIM2 counter high	0x00
0x00 525D		TIM2_CNTRL	TIM2 counter low	0x00
0x00 525E		TIM2_PSCR	TIM2 prescaler register	0x00
0x00 525F		TIM2_ARRH	TIM2 auto-reload register high	0xFF
0x00 5260		TIM2_ARRL	TIM2 auto-reload register low	0xFF
0x00 5261		TIM2_CCR1H	TIM2 capture/compare register 1 high	0x00
0x00 5262		TIM2_CCR1L	TIM2 capture/compare register 1 low	0x00
0x00 5263		TIM2_CCR2H	TIM2 capture/compare register 2 high	0x00
0x00 5264		TIM2_CCR2L	TIM2 capture/compare register 2 low	0x00
0x00 5265		TIM2_BKR	TIM2 break register	0x00
0x00 5266		TIM2_OISR	TIM2 output idle state register	0x00
0x00 5267 to 0x00 527F	Reserved area (25 bytes)			

Table 9. General hardware register map (continued)

Address	Block	Register label	Register name	Reset status
0x00 5280	TIM3	TIM3_CR1	TIM3 control register 1	0x00
0x00 5281		TIM3_CR2	TIM3 control register 2	0x00
0x00 5282		TIM3_SMCR	TIM3 Slave mode control register	0x00
0x00 5283		TIM3_ETR	TIM3 external trigger register	0x00
0x00 5284		TIM3_DER	TIM3 DMA1 request enable register	0x00
0x00 5285		TIM3_IER	TIM3 interrupt enable register	0x00
0x00 5286		TIM3_SR1	TIM3 status register 1	0x00
0x00 5287		TIM3_SR2	TIM3 status register 2	0x00
0x00 5288		TIM3_EGR	TIM3 event generation register	0x00
0x00 5289		TIM3_CCMR1	TIM3 Capture/Compare mode register 1	0x00
0x00 528A		TIM3_CCMR2	TIM3 Capture/Compare mode register 2	0x00
0x00 528B		TIM3_CCER1	TIM3 Capture/Compare enable register 1	0x00
0x00 528C		TIM3_CNTRH	TIM3 counter high	0x00
0x00 528D		TIM3_CNTRL	TIM3 counter low	0x00
0x00 528E		TIM3_PSCR	TIM3 prescaler register	0x00
0x00 528F		TIM3_ARRH	TIM3 Auto-reload register high	0xFF
0x00 5290		TIM3_ARRL	TIM3 Auto-reload register low	0xFF
0x00 5291		TIM3_CCR1H	TIM3 Capture/Compare register 1 high	0x00
0x00 5292		TIM3_CCR1L	TIM3 Capture/Compare register 1 low	0x00
0x00 5293		TIM3_CCR2H	TIM3 Capture/Compare register 2 high	0x00
0x00 5294		TIM3_CCR2L	TIM3 Capture/Compare register 2 low	0x00
0x00 5295		TIM3_BKR	TIM3 break register	0x00
0x00 5296		TIM3_OISR	TIM3 output idle state register	0x00
0x00 5297 to 0x00 52AF	Reserved area (25 bytes)			

Table 9. General hardware register map (continued)

Address	Block	Register label	Register name	Reset status
0x00 52B0	TIM1	TIM1_CR1	TIM1 control register 1	0x00
0x00 52B1		TIM1_CR2	TIM1 control register 2	0x00
0x00 52B2		TIM1_SMCR	TIM1 Slave mode control register	0x00
0x00 52B3		TIM1_ETR	TIM1 external trigger register	0x00
0x00 52B4		TIM1_DER	TIM1 DMA1 request enable register	0x00
0x00 52B5		TIM1_IER	TIM1 Interrupt enable register	0x00
0x00 52B6		TIM1_SR1	TIM1 status register 1	0x00
0x00 52B7		TIM1_SR2	TIM1 status register 2	0x00
0x00 52B8		TIM1_EGR	TIM1 event generation register	0x00
0x00 52B9		TIM1_CCMR1	TIM1 Capture/Compare mode register 1	0x00
0x00 52BA		TIM1_CCMR2	TIM1 Capture/Compare mode register 2	0x00
0x00 52BB		TIM1_CCMR3	TIM1 Capture/Compare mode register 3	0x00
0x00 52BC		TIM1_CCMR4	TIM1 Capture/Compare mode register 4	0x00
0x00 52BD		TIM1_CCER1	TIM1 Capture/Compare enable register 1	0x00
0x00 52BE		TIM1_CCER2	TIM1 Capture/Compare enable register 2	0x00
0x00 52BF		TIM1_CNTRH	TIM1 counter high	0x00
0x00 52C0		TIM1_CNTRL	TIM1 counter low	0x00
0x00 52C1		TIM1_PSCRH	TIM1 prescaler register high	0x00
0x00 52C2		TIM1_PSCRL	TIM1 prescaler register low	0x00
0x00 52C3		TIM1_ARRH	TIM1 Auto-reload register high	0xFF
0x00 52C4		TIM1_ARRL	TIM1 Auto-reload register low	0xFF
0x00 52C5		TIM1_RCR	TIM1 Repetition counter register	0x00
0x00 52C6		TIM1_CCR1H	TIM1 Capture/Compare register 1 high	0x00
0x00 52C7		TIM1_CCR1L	TIM1 Capture/Compare register 1 low	0x00
0x00 52C8		TIM1_CCR2H	TIM1 Capture/Compare register 2 high	0x00
0x00 52C9		TIM1_CCR2L	TIM1 Capture/Compare register 2 low	0x00
0x00 52CA		TIM1_CCR3H	TIM1 Capture/Compare register 3 high	0x00
0x00 52CB		TIM1_CCR3L	TIM1 Capture/Compare register 3 low	0x00
0x00 52CC		TIM1_CCR4H	TIM1 Capture/Compare register 4 high	0x00
0x00 52CD		TIM1_CCR4L	TIM1 Capture/Compare register 4 low	0x00
0x00 52CE		TIM1_BKR	TIM1 break register	0x00
0x00 52CF		TIM1_DTR	TIM1 dead-time register	0x00
0x00 52D0		TIM1_OISR	TIM1 output idle state register	0x00
0x00 52D1		TIM1_DCR1	DMA1 control register 1	0x00

Table 9. General hardware register map (continued)

Address	Block	Register label	Register name	Reset status
0x00 52D2	TIM1	TIM1_DCR2	TIM1 DMA1 control register 2	0x00
0x00 52D3		TIM1_DMA1R	TIM1 DMA1 address for burst mode	0x00
0x00 52D4 to 0x00 52DF	Reserved area (12 bytes)			
0x00 52E0	TIM4	TIM4_CR1	TIM4 control register 1	0x00
0x00 52E1		TIM4_CR2	TIM4 control register 2	0x00
0x00 52E2		TIM4_SMCR	TIM4 Slave mode control register	0x00
0x00 52E3		TIM4_DER	TIM4 DMA1 request enable register	0x00
0x00 52E4		TIM4_IER	TIM4 Interrupt enable register	0x00
0x00 52E5		TIM4_SR1	TIM4 status register 1	0x00
0x00 52E6		TIM4_EGR	TIM4 Event generation register	0x00
0x00 52E7		TIM4_CNTR	TIM4 counter	0x00
0x00 52E8		TIM4_PSCR	TIM4 prescaler register	0x00
0x00 52E9		TIM4_ARR	TIM4 Auto-reload register	0x00
0x00 52EA to 0x00 52FE	Reserved area (21 bytes)			
0x00 52FF	IRTIM	IR_CR	Infrared control register	0x00
0x00 5300 to 0x00 533F	Reserved area (64 bytes)			
0x00 5340	ADC1	ADC1_CR1	ADC1 configuration register 1	0x00
0x00 5341		ADC1_CR2	ADC1 configuration register 2	0x00
0x00 5342		ADC1_CR3	ADC1 configuration register 3	0x1F
0x00 5343		ADC1_SR	ADC1 status register	0x00
0x00 5344		ADC1_DRH	ADC1 data register high	0x00
0x00 5345		ADC1_DRL	ADC1 data register low	0x00
0x00 5346		ADC1_HTRH	ADC1 high threshold register high	0x0F
0x00 5347		ADC1_HTRL	ADC1 high threshold register low	0xFF
0x00 5348		ADC1_LTRH	ADC1 low threshold register high	0x00
0x00 5349		ADC1_LTRL	ADC1 low threshold register low	0x00
0x00 534A		ADC1_SQR1	ADC1 channel sequence 1 register	0x00
0x00 534B		ADC1_SQR2	ADC1 channel sequence 2 register	0x00
0x00 534C		ADC1_SQR3	ADC1 channel sequence 3 register	0x00
0x00 534D		ADC1_SQR4	ADC1 channel sequence 4 register	0x00

Table 9. General hardware register map (continued)

Address	Block	Register label	Register name	Reset status
0x00 534E	ADC1	ADC1_TRIGR1	ADC1 trigger disable 1	0x00
0x00 534F		ADC1_TRIGR2	ADC1 trigger disable 2	0x00
0x00 5350		ADC1_TRIGR3	ADC1 trigger disable 3	0x00
0x00 5351		ADC1_TRIGR4	ADC1 trigger disable 4	0x00
0x00 5352 to 0x00 537F	Reserved area (46 bytes)			
0x00 5380	DAC	DAC_CR1	DAC control register 1	0x00
0x00 5381		DAC_CR2	DAC control register 2	0x00
0x00 5382 to 0x00 5383		Reserved area (2 bytes)		
0x00 5384		DAC_SWTRIGR	DAC software trigger register	0x00
0x00 5385		DAC_SR	DAC status register	0x00
0x00 5386 to 0x00 5387		Reserved area (2 bytes)		
0x00 5388		DAC_RDHRH	DAC right aligned data holding register high	0x00
0x00 5389		DAC_RDHRL	DAC right aligned data holding register low	0x00
0x00 538A to 0x00 538B		Reserved area (2 bytes)		
0x00 538C		DAC_LDHRH	DAC left aligned data holding register high	0x00
0x00 538D		DAC_LDHRL	DAC left aligned data holding register low	0x00
0x00 538E to 0x00 538F		Reserved area (2 bytes)		
0x00 5390		DAC_DHR8	DAC 8-bit data holding register	0x00
0x00 5391 to 0x00 53AB		Reserved area (27 bytes)		
0x00 53AC		DAC_DORH	DAC data output register high	0x00
0x00 53AD		DAC_DORL	DAC data output register low	0x00
0x00 53AE to 0x00 53FF	Reserved area (82 bytes)			

Table 9. General hardware register map (continued)

Address	Block	Register label	Register name	Reset status
0x00 5400	LCD	LCD_CR1	LCD control register 1	0x00
0x00 5401		LCD_CR2	LCD control register 2	0x00
0x00 5402		LCD_CR3	LCD control register 3	0x00
0x00 5403		LCD_FRQ	LCD frequency selection register	0x00
0x00 5404		LCD_PM0	LCD Port mask register 0	0x00
0x00 5405		LCD_PM1	LCD Port mask register 1	0x00
0x00 5406		LCD_PM2	LCD Port mask register 2	0x00
0x00 5407		LCD_PM3	LCD Port mask register 3	0x00
0x00 5408 to 0x00 540B	LCD	Reserved area (4 bytes)		
0x00 540C		LCD_RAM0	LCD display memory 0	0x00
0x00 540D		LCD_RAM1	LCD display memory 1	0x00
0x00 540E		LCD_RAM2	LCD display memory 2	0x00
0x00 540F		LCD_RAM3	LCD display memory 3	0x00
0x00 5410		LCD_RAM4	LCD display memory 4	0x00
0x00 5411		LCD_RAM5	LCD display memory 5	0x00
0x00 5412		LCD_RAM6	LCD display memory 6	0x00
0x00 5413		LCD_RAM7	LCD display memory 7	0x00
0x00 5414		LCD_RAM8	LCD display memory 8	0x00
0x00 5415		LCD_RAM9	LCD display memory 9	0x00
0x00 5416		LCD_RAM10	LCD display memory 10	0x00
0x00 5417		LCD_RAM11	LCD display memory 11	0x00
0x00 5418		LCD_RAM12	LCD display memory 12	0x00
0x00 5419		LCD_RAM13	LCD display memory 13	0x00
0x00 541A to 0x00 542F	Reserved area (22 bytes)			

Table 9. General hardware register map (continued)

Address	Block	Register label	Register name	Reset status
0x00 5430	RI	Reserved area (1 byte)		0x00
0x00 5431		RI_ICR1	Timer input capture routing register 1	0x00
0x00 5432		RI_ICR2	Timer input capture routing register 2	0x00
0x00 5433		RI_IOIR1	I/O input register 1	undefined
0x00 5434		RI_IOIR2	I/O input register 2	undefined
0x00 5435		RI_IOIR3	I/O input register 3	undefined
0x00 5436		RI_IOCMR1	I/O control mode register 1	0x00
0x00 5437		RI_IOCMR2	I/O control mode register 2	0x00
0x00 5438		RI_IOCMR3	I/O control mode register 3	0x00
0x00 5439		RI_IOSR1	I/O switch register 1	0x00
0x00 543A		RI_IOSR2	I/O switch register 2	0x00
0x00 543B		RI_IOSR3	I/O switch register 3	0x00
0x00 543C		RI_IOGCR	I/O group control register	0x3F
0x00 543D		RI_ASCR1	Analog switch register 1	0x00
0x00 543E		RI_ASCR2	Analog switch register 2	0x00
0x00 543F		RI_RCR	Resistor control register 1	0x00
0x00 5440	COMP	COMP_CSR1	Comparator control and status register 1	0x00
0x00 5441		COMP_CSR2	Comparator control and status register 2	0x00
0x00 5442		COMP_CSR3	Comparator control and status register 3	0x00
0x00 5443		COMP_CSR4	Comparator control and status register 4	0x00
0x00 5444		COMP_CSR5	Comparator control and status register 5	0x00

1. These registers are not impacted by a system reset. They are reset at power-on.

Table 10. CPU/SWIM/debug module/interrupt controller registers

Address	Block	Register Label	Register Name	Reset Status
0x00 7F00	CPU[1]	A	Accumulator	0x00
0x00 7F01		PCE	Program counter extended	0x00
0x00 7F02		PCH	Program counter high	0x00
0x00 7F03		PCL	Program counter low	0x00
0x00 7F04		XH	X index register high	0x00
0x00 7F05		XL	X index register low	0x00
0x00 7F06		YH	Y index register high	0x00
0x00 7F07		YL	Y index register low	0x00
0x00 7F08		SPH	Stack pointer high	0x03
0x00 7F09		SPL	Stack pointer low	0xFF
0x00 7F0A		CCR	Condition code register	0x28
0x00 7F0B to 0x00 7F5F	CPU	Reserved area (85 byte)		
0x00 7F60		CFG_GCR	Global configuration register	0x00
0x00 7F70	ITC-SPR	ITC_SPR1	Interrupt Software priority register 1	0xFF
0x00 7F71		ITC_SPR2	Interrupt Software priority register 2	0xFF
0x00 7F72		ITC_SPR3	Interrupt Software priority register 3	0xFF
0x00 7F73		ITC_SPR4	Interrupt Software priority register 4	0xFF
0x00 7F74		ITC_SPR5	Interrupt Software priority register 5	0xFF
0x00 7F75		ITC_SPR6	Interrupt Software priority register 6	0xFF
0x00 7F76		ITC_SPR7	Interrupt Software priority register 7	0xFF
0x00 7F77		ITC_SPR8	Interrupt Software priority register 8	0xFF
0x00 7F78 to 0x00 7F79	Reserved area (2 byte)			
0x00 7F80	SWIM	SWIM_CSR	SWIM control status register	0x00
0x00 7F81 to 0x00 7F8F	Reserved area (15 byte)			

Table 10. CPU/SWIM/debug module/interrupt controller registers (continued)

Address	Block	Register Label	Register Name	Reset Status
0x00 7F90	DM	DM_BK1RE	DM breakpoint 1 register extended byte	0xFF
0x00 7F91		DM_BK1RH	DM breakpoint 1 register high byte	0xFF
0x00 7F92		DM_BK1RL	DM breakpoint 1 register low byte	0xFF
0x00 7F93		DM_BK2RE	DM breakpoint 2 register extended byte	0xFF
0x00 7F94		DM_BK2RH	DM breakpoint 2 register high byte	0xFF
0x00 7F95		DM_BK2RL	DM breakpoint 2 register low byte	0xFF
0x00 7F96		DM_CR1	DM Debug module control register 1	0x00
0x00 7F97		DM_CR2	DM Debug module control register 2	0x00
0x00 7F98		DM_CSR1	DM Debug module control/status register 1	0x10
0x00 7F99		DM_CSR2	DM Debug module control/status register 2	0x00
0x00 7F9A		DM_ENFCTR	DM enable function register	0xFF
0x00 7F9B to 0x00 7F9F	Reserved area (5 byte)			

1. Accessible by debug module only

6 Interrupt vector mapping

Table 11. Interrupt mapping

IRQ No.	Source block	Description	Wakeup from Halt mode	Wakeup from Active-halt mode	Wakeup from Wait (WFI mode)	Wakeup from Wait (WFE mode)(1)	Vector address
-	RESET	Reset	Yes	Yes	Yes	Yes	0x00 8000
-	TRAP	Software interrupt	-	-	-	-	0x00 8004
0	Reserved						0x00 8008
1	FLASH	FLASH end of programing/ write attempted to protected page interrupt	-	-	Yes	Yes	0x00 800C
2	DMA1 0/1	DMA1 channels 0/1 half transaction/transaction complete interrupt	-	-	Yes	Yes	0x00 8010
3	DMA1 2/3	DMA1 channels 2/3 half transaction/transaction complete interrupt	-	-	Yes	Yes	0x00 8014
4	RTC	RTC alarm A/ wakeup	Yes	Yes	Yes	Yes	0x00 8018
5	EXTI E/F/ PVD(2)	External interrupt port E/F PVD interrupt	Yes	Yes	Yes	Yes	0x00 801C
6	EXTIB/G	External interrupt port B/G	Yes	Yes	Yes	Yes	0x00 8020
7	EXTID/H	External interrupt port D/H	Yes	Yes	Yes	Yes	0x00 8024
8	EXTI0	External interrupt 0	Yes	Yes	Yes	Yes	0x00 8028
9	EXTI1	External interrupt 1	Yes	Yes	Yes	Yes	0x00 802C
10	EXTI2	External interrupt 2	Yes	Yes	Yes	Yes	0x00 8030
11	EXTI3	External interrupt 3	Yes	Yes	Yes	Yes	0x00 8034
12	EXTI4	External interrupt 4	Yes	Yes	Yes	Yes	0x00 8038
13	EXTI5	External interrupt 5	Yes	Yes	Yes	Yes	0x00 803C
14	EXTI6	External interrupt 6	Yes	Yes	Yes	Yes	0x00 8040
15	EXTI7	External interrupt 7	Yes	Yes	Yes	Yes	0x00 8044
16	LCD	LCD interrupt	-	-	Yes	Yes	0x00 8048
17	CLK/TIM1/ DAC	CLK system clock switch/ CSS interrupt/ TIM 1 break/DAC	-	-	Yes	Yes	0x00 804C
18	COMP1/ COMP2/ ADC1	COMP1 interrupt COMP2 interrupt ACD1 end of conversion/ analog watchdog/ overrun interrupt	Yes	Yes	Yes	Yes	0x00 8050

Table 11. Interrupt mapping (continued)

IRQ No.	Source block	Description	Wakeup from Halt mode	Wakeup from Active-halt mode	Wakeup from Wait (WFI mode)	Wakeup from Wait (WFE mode)(1)	Vector address
19	TIM2	TIM2 update/overflow/ trigger/break interrupt	-	-	Yes	Yes	0x00 8054
20	TIM2	TIM2 capture/ compare interrupt	-	-	Yes	Yes	0x00 8058
21	TIM3	TIM3 update/overflow/ trigger/break interrupt	-	-	Yes	Yes	0x00 805C
22	TIM3	TIM3 capture/ compare interrupt	-	-	Yes	Yes	0x00 8060
23	TIM1	Update /overflow/trigger/ COM	-	-	-	Yes	0x00 8064
24	TIM1	Capture/compare	-	-	-	Yes	0x00 8068
25	TIM4	TIM4 update/overflow/ trigger interrupt	-	-	Yes	Yes	0x00 806C
26	SPI1	SPI1 TX buffer empty/ RX buffer not empty/ error/wakeup interrupt	Yes	Yes	Yes	Yes	0x00 8070
27	USART1	USART1 transmit data register empty/ transmission complete interrupt	-	-	Yes	Yes	0x00 8074
28	USART1	USART1 received data ready/overrun error/ idle line detected/parity error/global error interrupt	-	-	Yes	Yes	0x00 8078
29	I^2C1	I^2C1 interrupt(3)	Yes	Yes	Yes	Yes	0x00 807C

1. The Low power wait mode is entered when executing a WFE instruction in Low power run mode. In WFE mode, the interrupt is served if it has been previously enabled. After processing the interrupt, the processor goes back to WFE mode. When the interrupt is configured as a wakeup event, the CPU wakes up and resumes processing.
2. The interrupt from PVD is logically OR-ed with Port E and F interrupts. Register EXTI_CONF allows to select between Port E and Port F interrupt (see *External interrupt port select register (EXTI_CONF)* in the RM0031).
3. The device is woken up from Halt or Active-halt mode only when the address received matches the interface address.

7 Option bytes

Option bytes contain configurations for device hardware features as well as the memory protection of the device. They are stored in a dedicated memory block.

All option bytes can be modified in ICP mode (with SWIM) by accessing the EEPROM address. See *Table 12* for details on option byte addresses.

The option bytes can also be modified 'on the fly' by the application in IAP mode, except for the ROP and UBC values which can only be taken into account when they are modified in ICP mode (with the SWIM).

Refer to the STM8L15x Flash programming manual (PM0054) and STM8 SWIM and Debug Manual (UM0470) for information on SWIM programming procedures.

Table 12. Option byte addresses

Addr.	Option name	Option byte No.	Option bits								Factory default setting
			7	6	5	4	3	2	1	0	
0x00 4800	Read-out protection (ROP)	OPT0	ROP[7:0]								0xAA
0x00 4802	UBC (User Boot code size)	OPT1	UBC[7:0]								0x00
0x00 4807	Reserved										0x00
0x00 4808	Independent watchdog option	OPT3 [3:0]	Reserved				WWDG _HALT	WWDG _HW	IWDG _HALT	IWDG _HW	0x00
0x00 4809	Number of stabilization clock cycles for HSE and LSE oscillators	OPT4	Reserved				LSECNT[1:0]		HSECNT[1:0]		0x00
0x00 480A	Brownout reset (BOR)	OPT5 [3:0]	Reserved				BOR_TH			BOR_ ON	0x00
0x00 480B	Bootloader option bytes (OPTBL)	OPTBL [15:0]	OPTBL[15:0]								0x00
0x00 480C											0x00

Table 13. Option byte description

Option byte No.	Option description
OPT0	**ROP[7:0]** Memory readout protection (ROP) 0xAA: Disable readout protection (write access via SWIM protocol) Refer to Readout protection section in the STM8L15x and STM8L16x reference manual (RM0031).
OPT1	**UBC[7:0]** Size of the user boot code area 0x00: no UBC 0x01: the UBC contains only the interrupt vectors. 0x02: Page 0 and 1 reserved for the UBC and read/write protected. Page 0 contains only the interrupt vectors. 0x03 - Page 0 to 2 reserved for UBC, memory write-protected 0xFF - Page 0 to 254 reserved for UBC, memory write-protected Refer to User boot code section in the STM8L15x and STM8L16x reference manual (RM0031).
OPT2	Reserved
OPT3	**IWDG_HW:** Independent watchdog 0: Independent watchdog activated by software 1: Independent watchdog activated by hardware
	IWDG_HALT: Independent window watchdog off on Halt/Active-halt 0: Independent watchdog continues running in Halt/Active-halt mode 1: Independent watchdog stopped in Halt/Active-halt mode
	WWDG_HW: Window watchdog 0: Window watchdog activated by software 1: Window watchdog activated by hardware
	WWDG_HALT: Window window watchdog reset on Halt/Active-halt 0: Window watchdog stopped in Halt mode 1: Window watchdog generates a reset when MCU enters Halt mode
OPT4	**HSECNT**: Number of HSE oscillator stabilization clock cycles 0x00 - 1 clock cycle 0x01 - 16 clock cycles 0x10 - 512 clock cycles 0x11 - 4096 clock cycles
	LSECNT: Number of LSE oscillator stabilization clock cycles 0x00 - 1 clock cycle 0x01 - 16 clock cycles 0x10 - 512 clock cycles 0x11 - 4096 clock cycles Refer to *Table 32: LSE oscillator characteristics on page 84*.

Table 13. Option byte description (continued)

Option byte No.	Option description
OPT5	**BOR_ON**: 0: Brownout reset off 1: Brownout reset on
	BOR_TH[3:1]: Brownout reset thresholds. Refer to *Table 23* for details on the thresholds according to the value of BOR_TH bits.
OPTBL	**OPTBL[15:0]**: This option is checked by the boot ROM code after reset. Depending on content of addresses 00 480B, 00 480C and 0x8000 (reset vector) the CPU jumps to the bootloader or to the reset vector. Refer to the UM0560 bootloader user manual for more details.

8 Unique ID

STM8 devices feature a 96-bit unique device identifier which provides a reference number that is unique for any device and in any context. The 96 bits of the identifier can never be altered by the user.

The unique device identifier can be read in single bytes and may then be concatenated using a custom algorithm.

The unique device identifier is ideally suited:

- For use as serial numbers
- For use as security keys to increase the code security in the program memory while using and combining this unique ID with software cryptographic primitives and protocols before programming the internal memory.
- To activate secure boot processes

Table 14. Unique ID registers (96 bits)

Address	Content description	Unique ID bits							
		7	6	5	4	3	2	1	0
0x4926	X co-ordinate on the wafer	U_ID[7:0]							
0x4927		U_ID[15:8]							
0x4928	Y co-ordinate on the wafer	U_ID[23:16]							
0x4929		U_ID[31:24]							
0x492A	Wafer number	U_ID[39:32]							
0x492B	Lot number	U_ID[47:40]							
0x492C		U_ID[55:48]							
0x492D		U_ID[63:56]							
0x492E		U_ID[71:64]							
0x492F		U_ID[79:72]							
0x4930		U_ID[87:80]							
0x4931		U_ID[95:88]							

9 Electrical parameters

9.1 Parameter conditions

Unless otherwise specified, all voltages are referred to V_{SS}.

9.1.1 Minimum and maximum values

Unless otherwise specified the minimum and maximum values are guaranteed in the worst conditions of ambient temperature, supply voltage and frequencies by tests in production on 100% of the devices with an ambient temperature at T_A= 25 °C and T_A = T_A max (given by the selected temperature range).

Data based on characterization results, design simulation and/or technology characteristics is indicated in the table footnotes and are not tested in production. Based on characterization, the minimum and maximum values refer to sample tests and represent the mean value plus or minus three times the standard deviation (mean±3Σ).

9.1.2 Typical values

Unless otherwise specified, typical data is based on T_A = 25 °C, V_{DD} = 3 V. It is given only as design guidelines and is not tested.

Typical ADC accuracy values are determined by characterization of a batch of samples from a standard diffusion lot over the full temperature range, where 95% of the devices have an error less than or equal to the value indicated (mean±2Σ).

9.1.3 Typical curves

Unless otherwise specified, all typical curves are given only as design guidelines and are not tested.

9.1.4 Loading capacitor

The loading conditions used for pin parameter measurement are shown in *Figure 10*.

Figure 10. Pin loading conditions

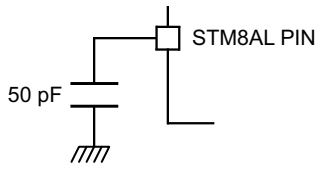

9.1.5 Pin input voltage

The input voltage measurement on a pin of the device is described in *Figure 11*.

Figure 11. Pin input voltage

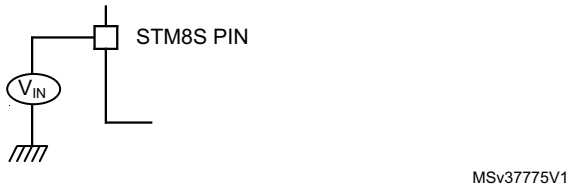

9.2 Absolute maximum ratings

Stresses above the absolute maximum ratings listed in *Table 15: Voltage characteristics*, *Table 16: Current characteristics*, and *Table 17: Thermal characteristics* may cause permanent damage to the device. These are stress ratings only and functional operation of the device at these conditions is not implied. Exposure to maximum rating conditions for extended periods may affect device reliability.

Device mission profile (application conditions) is compliant with JEDEC JESD47 Qualification Standard, extended mission profiles are available on demand.

Table 15. Voltage characteristics

Symbol	Ratings	Min	Max	Unit
V_{DD}- V_{SS}	External supply voltage (including V_{DDA} and V_{DD2})(1)	- 0.3	4.0	V
V_{IN}(2)	Input voltage on true open-drain pins (PC0 and PC1)	V_{SS} - 0.3	V_{DD} + 4.0	V
	Input voltage on five-volt tolerant (FT) pins (PA7 and PE0)	V_{SS} - 0.3	V_{DD} + 4.0	
	Input voltage on 3.6 V tolerant (TT) pins	V_{SS} - 0.3	4.0	
	Input voltage on any other pin	V_{SS} - 0.3	4.0	
V_{ESD}	Electrostatic discharge voltage	see *Absolute maximum ratings (electrical sensitivity) on page 115*		

1. All power (V_{DD1}, V_{DD2}, V_{DDA}) and ground (V_{SS1}, V_{SS2}, V_{SSA}) pins must always be connected to the external power supply.
2. V_{IN} maximum must always be respected. Refer to *Table 16.* for maximum allowed injected current values.

Table 16. Current characteristics

Symbol	Ratings	Max.	Unit
I_{VDD}	Total current into V_{DD} power line (source)	80	mA
I_{VSS}	Total current out of V_{SS} ground line (sink)	80	
I_{IO}	Output current sunk by IR_TIM pin (with high sink LED driver capability)	80	
	Output current sunk by any other I/O and control pin	25	
	Output current sourced by any I/Os and control pin	- 25	
$I_{INJ(PIN)}$	Injected current on true open-drain pins (PC0 and PC1)(1)	- 5 / +0	mA
	Injected current on five-volt tolerant (FT) pins (PA7 and PE0) (1)	- 5 / +0	
	Injected current on 3.6 V tolerant (TT) pins (1)	- 5 / +0	
	Injected current on any other pin (2)	- 5 / +5	
$\Sigma I_{INJ(PIN)}$	Total injected current (sum of all I/O and control pins) (3)	± 25	

1. Positive injection is not possible on these I/Os. A negative injection is induced by $V_{IN}<V_{SS}$. $I_{INJ(PIN)}$ must never be exceeded. Refer to *Table 15.* for maximum allowed input voltage values.
2. A positive injection is induced by $V_{IN}>V_{DD}$ while a negative injection is induced by $V_{IN}<V_{SS}$. $I_{INJ(PIN)}$ must never be exceeded. Refer to *Table 15.* for maximum allowed input voltage values.
3. When several inputs are submitted to a current injection, the maximum $\Sigma I_{INJ(PIN)}$ is the absolute sum of the positive and negative injected currents (instantaneous values).

Table 17. Thermal characteristics

Symbol	Ratings	Value	Unit
T_{STG}	Storage temperature range	-65 to +150	° C
T_J	Maximum junction temperature	150	

9.3 Operating conditions

Subject to general operating conditions for V_{DD} and T_A.

9.3.1 General operating conditions

Table 18. General operating conditions

Symbol	Parameter	Conditions		Min.	Max.	Unit
f_{SYSCLK}(1)	System clock frequency	1.65 V ≤V_{DD} < 3.6 V		0	16	MHz
V_{DD}	Standard operating voltage	-		1.65(2)	3.6	V
V_{DDA}	Analog operating voltage	ADC and DAC not used	Must be at the same potential as V_{DD}	1.65(2)	3.6	V
		ADC or DAC used		1.8	3.6	V
P_D(3)	Power dissipation at T_A= 85 °C for suffix 6 devices	LQFP48		-	288	mW
		UFQFPN48		-	169	
		LQFP32		-	288	
		UFQFPN32		-	169	
		UFQFPN28		-	169	
		WLCSP28		-	286	
	Power dissipation at T_A= 125 °C for suffix 3 devices and at T_A= 105 °C for suffix 7 devices	LQFP48		-	77	
		UFQFPN48		-	156	
		LQFP32		-	85	
		UFQFPN32		-	131	
		UFQFPN28		-	42	
		WLCSP28		-	71	
T_A	Temperature range	1.65 V ≤V_{DD} < 3.6 V (6 suffix version)		-40	85	°C
		1.65 V ≤V_{DD} < 3.6 V (7 suffix version)		-40	105	
		1.65 V ≤V_{DD} < 3.6 V (3 suffix version)		-40	125	
T_J	Junction temperature range	-40 °C ≤T_A < 85 °C (6 suffix version)		-40	105(4)	°C
		-40 °C ≤ T_A < 105 °C (7 suffix version)		-40	110(4)	
		-40 °C ≤ T_A < 125 °C (3 suffix version)		-40	130	

1. $f_{SYSCLK} = f_{CPU}$
2. 1.8 V at power-up, 1.65 V at power-down if BOR is disabled
3. To calculate $P_{Dmax}(T_A)$, use the formula $P_{Dmax}=(T_{Jmax} - T_A)/\Theta_{JA}$ with T_{Jmax} in this table and Θ_{JA} in “Thermal characteristics” table.
4. T_{Jmax} is given by the test limit. Above this value the product behavior is not guaranteed.

9.3.2 Embedded reset and power control block characteristics

Table 19. Embedded reset and power control block characteristics

Symbol	Parameter	Conditions	Min	Typ	Max	Unit
t_{VDD}	V_{DD} rise time rate	BOR detector enabled	0(1)	-	∞(1)	µs/V
	V_{DD} fall time rate	BOR detector enabled	20(1)	-	∞(1)	
t_{TEMP}	Reset release delay	V_{DD} rising BOR detector enabled	-	3	-	ms
		V_{DD} rising BOR detector disabled	-	1	-	
V_{PDR}	Power-down reset threshold	Falling edge	1.30(2)	1.50	1.65	V
V_{BOR0}	Brown-out reset threshold 0 (BOR_TH[2:0]=000)	Falling edge	1.67	1.70	1.74	V
		Rising edge	1.69	1.75	1.80	
V_{BOR1}	Brown-out reset threshold 1 (BOR_TH[2:0]=001)	Falling edge	1.87	1.93	1.97	
		Rising edge	1.96	2.04	2.07	
V_{BOR2}	Brown-out reset threshold 2 (BOR_TH[2:0]=010)	Falling edge	2.22	2.3	2.35	
		Rising edge	2.31	2.41	2.44	
V_{BOR3}	Brown-out reset threshold 3 (BOR_TH[2:0]=011)	Falling edge	2.45	2.55	2.60	
		Rising edge	2.54	2.66	2.7	
V_{BOR4}	Brown-out reset threshold 4 (BOR_TH[2:0]=100)	Falling edge	2.68	2.80	2.85	
		Rising edge	2.78	2.90	2.95	
V_{PVD0}	PVD threshold 0	Falling edge	1.80	1.84	1.88	V
		Rising edge	1.88	1.94	1.99	
V_{PVD1}	PVD threshold 1	Falling edge	1.98	2.04	2.09	
		Rising edge	2.08	2.14	2.18	
V_{PVD2}	PVD threshold 2	Falling edge	2.2	2.24	2.28	
		Rising edge	2.28	2.34	2.38	
V_{PVD3}	PVD threshold 3	Falling edge	2.39	2.44	2.48	
		Rising edge	2.47	2.54	2.58	
V_{PVD4}	PVD threshold 4	Falling edge	2.57	2.64	2.69	
		Rising edge	2.68	2.74	2.79	
V_{PVD5}	PVD threshold 5	Falling edge	2.77	2.83	2.88	
		Rising edge	2.87	2.94	2.99	
V_{PVD6}	PVD threshold 6	Falling edge	2.97	3.05	3.09	
		Rising edge	3.08	3.15	3.20	

1. Data guaranteed by design.
2. Data based on characterization results.

Figure 12. POR/BOR thresholds

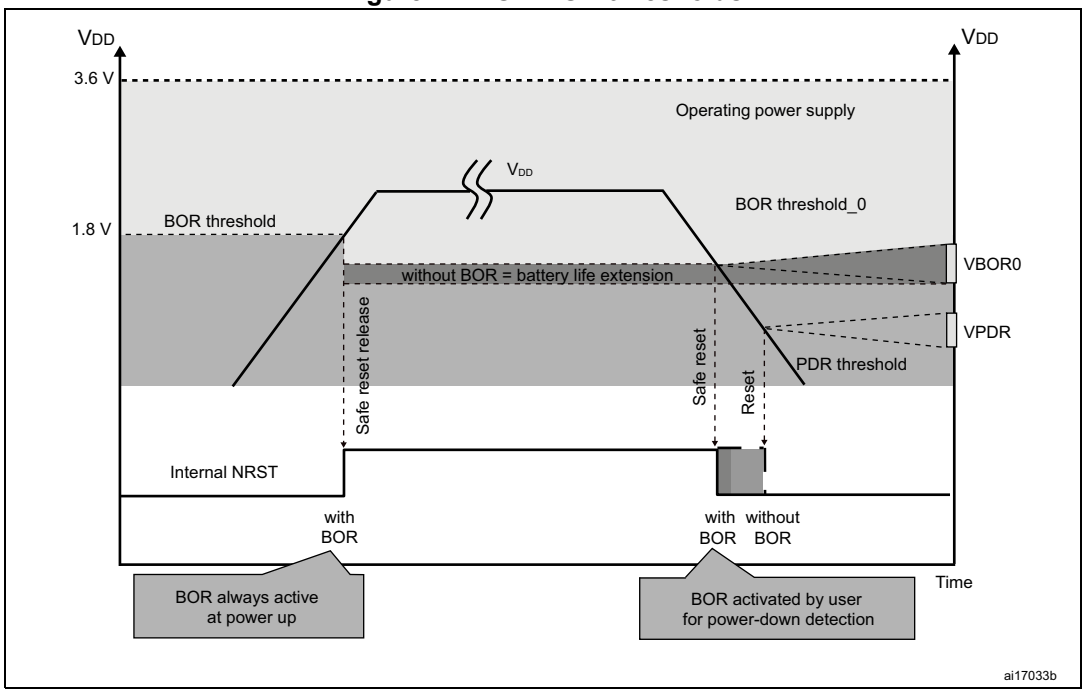

9.3.3 Supply current characteristics

Total current consumption

The MCU is placed under the following conditions:

- All I/O pins in input mode with a static value at V_{DD} or V_{SS} (no load)
- All peripherals are disabled except if explicitly mentioned.

In the following table, data is based on characterization results, unless otherwise specified.

Subject to general operating conditions for V_{DD} and T_A.

Table 20. Total current consumption in Run mode

Symbol	Parameter	Conditions[1]			Typ	Max				Unit
						55 °C	85 °C[2]	105°C[3]	125 °C[4]	
$I_{DD(RUN)}$	Supply current in run mode[5]	All peripherals OFF, code executed from RAM, V_{DD} from 1.65 V to 3.6 V	HSI RC osc. (16 MHz)[6]	f_{CPU} = 125 kHz	0.39	0.47	0.49	0.52	0.55	mA
				f_{CPU} = 1 MHz	0.48	0.56	0.58	0.61	0.65	
				f_{CPU} = 4 MHz	0.75	0.84	0.86	0.91	0.99	
				f_{CPU} = 8 MHz	1.10	1.20	1.25	1.31	1.40	
				f_{CPU} = 16 MHz	1.85	1.93	2.12[8]	2.29[8]	2.36[8]	
			HSE external clock (f_{CPU}=f_{HSE})[7]	f_{CPU} = 125 kHz	0.05	0.06	0.09	0.11	0.12	
				f_{CPU} = 1 MHz	0.18	0.19	0.20	0.22	0.23	
				f_{CPU} = 4 MHz	0.55	0.62	0.64	0.71	0.77	
				f_{CPU} = 8 MHz	0.99	1.20	1.21	1.22	1.24	
				f_{CPU} = 16 MHz	1.90	2.22	2.23[8]	2.24[8]	2.28[8]	
			LSI RC osc. (typ. 38 kHz)	f_{CPU} = f_{LSI}	0.040	0.045	0.046	0.048	0.050	
			LSE external clock (32.768 kHz)	f_{CPU} = f_{LSE}	0.035	0.040	0.048[8]	0.050	0.062	
$I_{DD(RUN)}$	Supply current in Run mode	All peripherals OFF, code executed from Flash, V_{DD} from 1.65 V to 3.6 V	HSI RC osc.[9]	f_{CPU} = 125 kHz	0.43	0.55	0.56	0.58	0.62	mA
				f_{CPU} = 1 MHz	0.60	0.77	0.80	0.82	0.87	
				f_{CPU} = 4 MHz	1.11	1.34	1.37	1.39	1.43	
				f_{CPU} = 8 MHz	1.90	2.20	2.23	2.31	2.40	
				f_{CPU} = 16 MHz	3.8	4.60	4.75	4.87	4.88	
			HSE external clock (f_{CPU}=f_{HSE})[7]	f_{CPU} = 125 kHz	0.30	0.36	0.39	0.44	0.47	
				f_{CPU} = 1 MHz	0.40	0.50	0.52	0.55	0.56	
				f_{CPU} = 4 MHz	1.15	1.31	1.40	1.45	1.48	
				f_{CPU} = 8 MHz	2.17	2.33	2.44	2.56	2.77	
				f_{CPU} = 16 MHz	4.0	4.46	4.52	4.59	4.77	
			LSI RC osc.	f_{CPU} = f_{LSI}	0.110	0.123	0.130	0.140	0.150	
			LSE ext. clock (32.768 kHz)[10]	f_{CPU} = f_{LSE}	0.100	0.101	0.104	0.119	0.122	

1. All peripherals OFF, V_{DD} from 1.65 V to 3.6 V, HSI internal RC osc., f_{CPU}=f_{SYSCLK}
2. For devices with suffix 6
3. For devices with suffix 7
4. For devices with suffix 3

5. CPU executing typical data processing
6. The run from RAM consumption can be approximated with the linear formula:
   I_{DD}(run_from_RAM) = Freq * 90 µA/MHz + 380 µA
7. Oscillator bypassed (HSEBYP = 1 in CLK_ECKCR). When configured for external crystal, the HSE consumption ($I_{DD\ HSE}$) must be added. Refer to *Table 31*.
8. Tested in production.
9. The run from Flash consumption can be approximated with the linear formula:
   I_{DD}(run_from_Flash) = Freq * 195 µA/MHz + 440 µA
10. Oscillator bypassed (LSEBYP = 1 in CLK_ECKCR). When configured for external crystal, the LSE consumption ($I_{DD\ LSE}$) must be added. Refer to *Table 32*.

Figure 13. Typ. $I_{DD(RUN)}$ vs. V_{DD}, f_{CPU} = 16 MHz

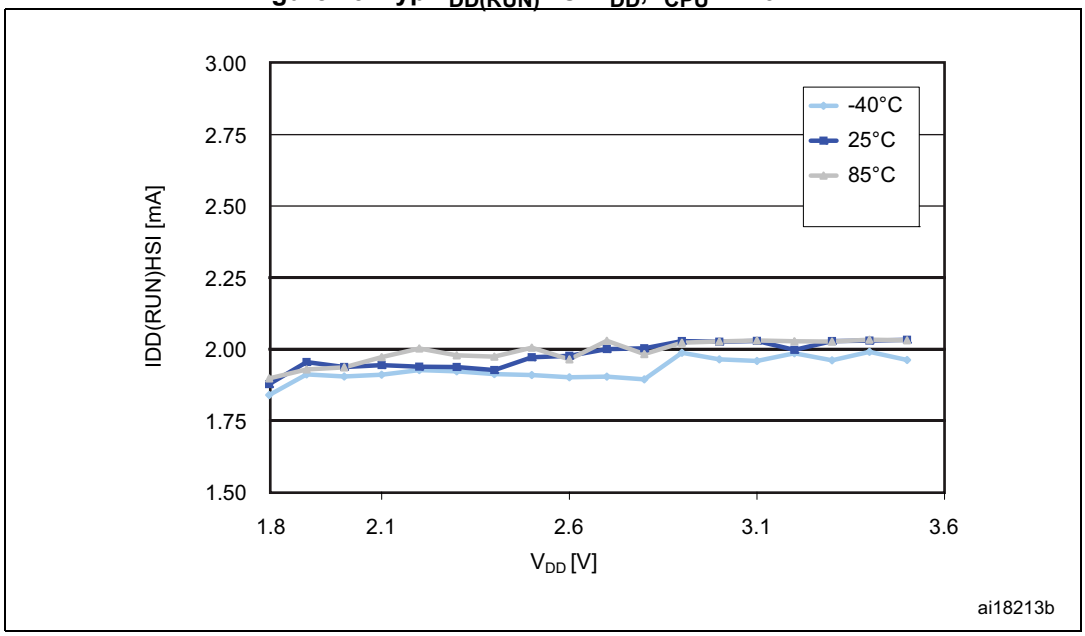

1. Typical current consumption measured with code executed from RAM

In the following table, data is based on characterization results, unless otherwise specified.

Table 21. Total current consumption in Wait mode

Symbol	Parameter	Conditions[1]			Typ	Max				Unit
						55°C	85 °C[2]	105 °C [3]	125 °C [4]	
$I_{DD(Wait)}$	Supply current in Wait mode	CPU not clocked, all peripherals OFF, code executed from RAM with Flash in I_{DDQ} mode[5], V_{DD} from 1.65 V to 3.6 V	HSI	f_{CPU} = 125 kHz	0.33	0.39	0.41	0.43	0.45	mA
				f_{CPU} = 1 MHz	0.35	0.41	0.44	0.45	0.48	
				f_{CPU} = 4 MHz	0.42	0.51	0.52	0.54	0.58	
				f_{CPU} = 8 MHz	0.52	0.57	0.58	0.59	0.62	
				f_{CPU} = 16 MHz	0.68	0.76	0.79	0.82 (7)	0.85 (7)	
			HSE external clock (f_{CPU}=f_{HSE}) (6)	f_{CPU} = 125 kHz	0.032	0.056	0.068	0.072	0.093	
				f_{CPU} = 1 MHz	0.078	0.121	0.144	0.163	0.197	
				f_{CPU} = 4 MHz	0.218	0.26	0.30	0.36	0.40	
				f_{CPU} = 8 MHz	0.40	0.52	0.57	0.62	0.66	
				f_{CPU} = 16 MHz	0.760	1.01	1.05	1.09 (7)	1.16 (7)	
			LSI	f_{CPU} = f_{LSI}	0.035	0.044	0.046	0.049	0.054	
			LSE[8] external clock (32.768 kHz)	f_{CPU} = f_{LSE}	0.032	0.036	0.038	0.044	0.051	

Table 21. Total current consumption in Wait mode (continued)

Symbol	Parameter	Conditions[1]			Typ	Max				Unit
						55°C	85 °C[2]	105 °C [3]	125 °C [4]	
$I_{DD(Wait)}$	Supply current in Wait mode	CPU not clocked, all peripherals OFF, code executed from Flash, V_{DD} from 1.65 V to 3.6 V	HSI	f_{CPU} = 125 kHz	0.38	0.48	0.49	0.50	0.56	mA
				f_{CPU} = 1 MHz	0.41	0.49	0.51	0.53	0.59	
				f_{CPU} = 4 MHz	0.50	0.57	0.58	0.62	0.66	
				f_{CPU} = 8 MHz	0.60	0.66	0.68	0.72	0.74	
				f_{CPU} = 16 MHz	0.79	0.84	0.86	0.87	0.90	
			HSE[6] external clock (f_{CPU}=HSE)	f_{CPU} = 125 kHz	0.06	0.08	0.09	0.10	0.12	
				f_{CPU} = 1 MHz	0.10	0.17	0.18	0.19	0.22	
				f_{CPU} = 4 MHz	0.24	0.36	0.39	0.41	0.44	
				f_{CPU} = 8 MHz	0.50	0.58	0.61	0.62	0.64	
				f_{CPU} = 16 MHz	1.00	1.08	1.14	1.16	1.18	
			LSI	$f_{CPU} = f_{LSI}$	0.055	0.058	0.065	0.073	0.080	
			LSE[8] external clock (32.768 kHz)	$f_{CPU} = f_{LSE}$	0.051	0.056	0.060	0.065	0.073	

1. All peripherals OFF, V_{DD} from 1.65 V to 3.6 V, HSI internal RC osc., $f_{CPU} = f_{SYSCLK}$
2. For temperature range 6.
3. For temperature range 7.
4. For temperature range 3.
5. Flash is configured in I_{DDQ} mode in Wait mode by setting the EPM or WAITM bit in the Flash_CR1 register.
6. Oscillator bypassed (HSEBYP = 1 in CLK_ECKCR). When configured for external crystal, the HSE consumption ($I_{DD\ HSE}$) must be added. Refer to *Table 31*.
7. Tested in production.
8. Oscillator bypassed (LSEBYP = 1 in CLK_ECKCR). When configured for external crystal, the LSE consumption ($I_{DD\ HSE}$) must be added. Refer to *Table 32*.

Figure 14. Typ. $I_{DD(Wait)}$ vs. V_{DD}, f_{CPU} = 16 MHz [1)]

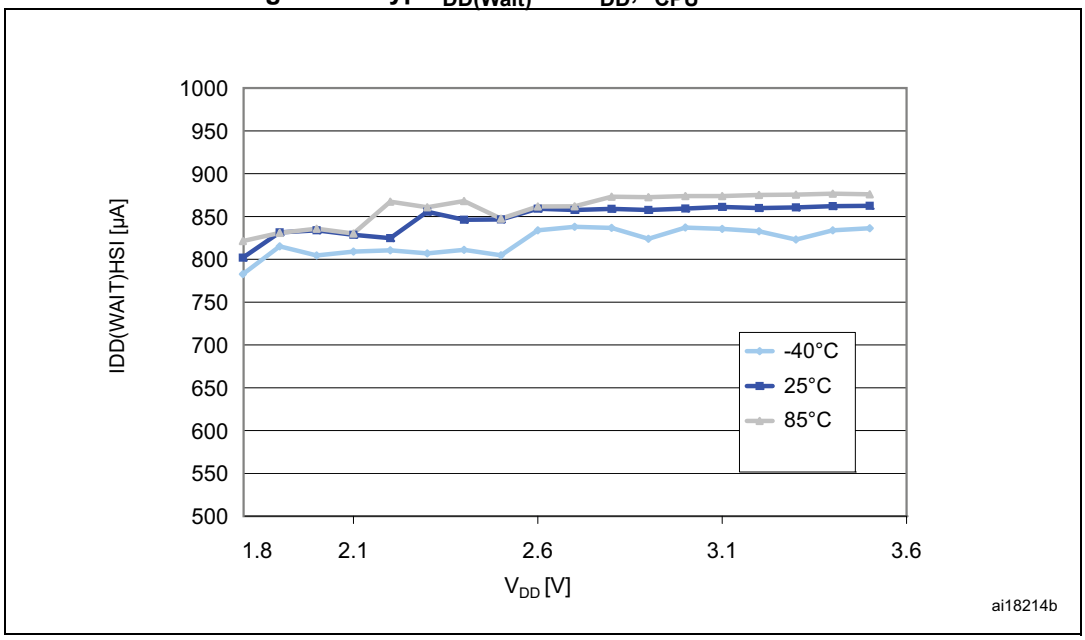

1. Typical current consumption measured with code executed from Flash memory.

In the following table, data is based on characterization results, unless otherwise specified.

Table 22. Total current consumption and timing in Low power run mode at V_{DD} = 1.65 V to 3.6 V

Symbol	Parameter	Conditions[1]			Typ	Max	Unit
$I_{DD(LPR)}$	Supply current in Low power run mode	LSI RC osc. (at 38 kHz)	all peripherals OFF	T_A = -40 °C to 25 °C	5.1	5.4	µA
				T_A = 55 °C	5.7	6	
				T_A = 85 °C	6.8	7.5	
				T_A = 105 °C	9.2	10.4	
				T_A = 125 °C	13.4	16.6	
			with TIM2 active[2]	T_A = -40 °C to 25 °C	5.4	5.7	
				T_A = 55 °C	6.0	6.3	
				T_A = 85 °C	7.2	7.8	
				T_A = 105 °C	9.4	10.7	
				T_A = 125 °C	13.8	17	
		LSE [3] external clock (32.768 kHz)	all peripherals OFF	T_A = -40 °C to 25 °C	5.25	5.6	
				T_A = 55 °C	5.67	6.1	
				T_A = 85 °C	5.85	6.3	
				T_A = 105 °C	7.11	7.6	
				T_A = 125 °C	9.84	12	
			with TIM2 active [2]	T_A = -40 °C to 25 °C	5.59	6	
				T_A = 55 °C	6.10	6.4	
				T_A = 85 °C	6.30	7	
				T_A = 105 °C	7.55	8.4	
				T_A = 125 °C	10.1	15	

1. No floating I/Os
2. Timer 2 clock enabled and counter running
3. Oscillator bypassed (LSEBYP = 1 in CLK_ECKCR). When configured for external crystal, the LSE consumption ($I_{DD\ LSE}$) must be added. Refer to *Table 32*

Figure 15. Typ. $I_{DD(LPR)}$ vs. V_{DD} (LSI clock source)

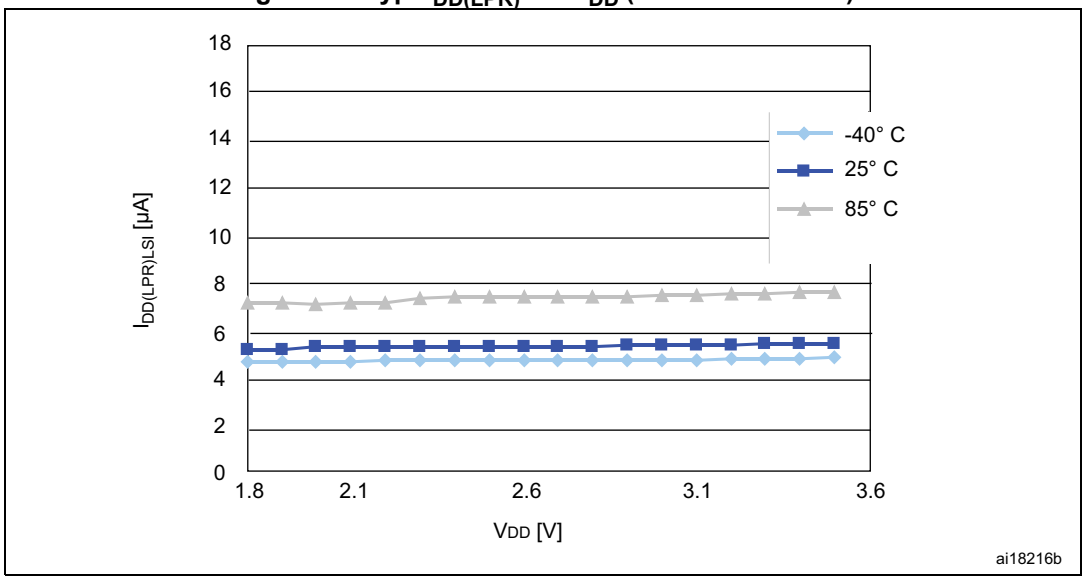

In the following table, data is based on characterization results, unless otherwise specified.

Table 23. Total current consumption in Low power wait mode at V_{DD} = 1.65 V to 3.6 V

Symbol	Parameter	Conditions[1]			Typ	Max	Unit
$I_{DD(LPW)}$	Supply current in Low power wait mode	LSI RC osc. (at 38 kHz)	all peripherals OFF	T_A = -40 °C to 25 °C	3	3.3	µA
				T_A = 55 °C	3.3	3.6	
				T_A = 85 °C	4.4	5	
				T_A = 105 °C	6.7	8	
				T_A = 125 °C	11	14	
			with TIM2 active[2]	T_A = -40 °C to 25 °C	3.4	3.7	
				T_A = 55 °C	3.7	4	
				T_A = 85 °C	4.8	5.4	
				T_A = 105 °C	7	8.3	
				T_A = 125 °C	11.3	14.5	
		LSE external clock[3] (32.768 kHz)	all peripherals OFF	T_A = -40 °C to 25 °C	2.35	2.7	
				T_A = 55 °C	2.42	2.82	
				T_A = 85 °C	3.10	3.71	
				T_A = 105 °C	4.36	5.7	
				T_A = 125 °C	7.20	11	
			with TIM2 active [2]	T_A = -40 °C to 25 °C	2.46	2.75	
				T_A = 55 °C	2.50	2.81	
				T_A = 85 °C	3.16	3.82	
				T_A = 105 °C	4.51	5.9	
				T_A = 125 °C	7.28	11	

1. No floating I/Os.
2. Timer 2 clock enabled and counter is running.
3. Oscillator bypassed (LSEBYP = 1 in CLK_ECKCR). When configured for external crystal, the LSE consumption ($I_{DD\ LSE}$) must be added. Refer to *Table 32*.

Figure 16. Typ. $I_{DD(LPW)}$ vs. V_{DD} (LSI clock source)

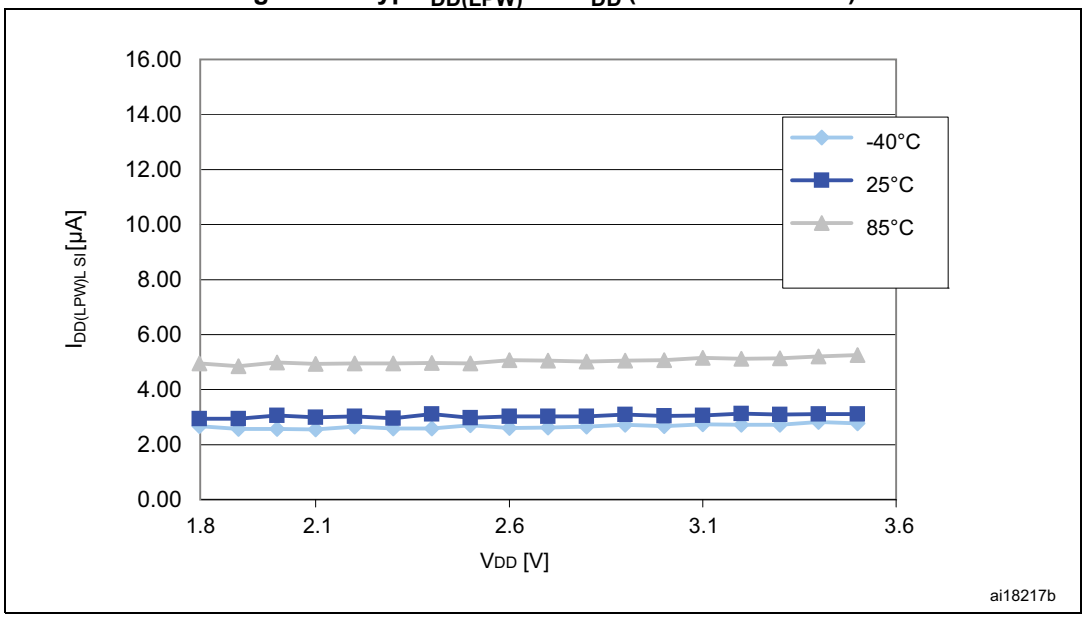

In the following table, data is based on characterization results, unless otherwise specified.

Table 24. Total current consumption and timing in Active-halt mode at V_{DD} = 1.65 V to 3.6 V

Symbol	Parameter	Conditions (1)			Typ	Max	Unit
$I_{DD(AH)}$	Supply current in Active-halt mode	LSI RC (at 38 kHz)	LCD OFF(2)	T_A = -40 °C to 25 °C	0.9	2.1	µA
				T_A = 55 °C	1.2	3	
				T_A = 85 °C	1.5	3.4	
				T_A = 105 °C	2.6	6.6	
				T_A = 125 °C	5.1	12	
			LCD ON (static duty/ external V_{LCD}) (3)	T_A = -40 °C to 25 °C	1.4	3.1	
				T_A = 55 °C	1.5	3.3	
				T_A = 85 °C	1.9	4.3	
				T_A = 105 °C	2.9	6.8	
				T_A = 125 °C	5.5	13	
			LCD ON (1/4 duty/ external V_{LCD}) (4)	T_A = -40 °C to 25 °C	1.9	4.3	
				T_A = 55 °C	1.95	4.4	
				T_A = 85 °C	2.4	5.4	
				T_A = 105 °C	3.4	7.6	
				T_A = 125 °C	6.0	15	
			LCD ON (1/4 duty/ internal V_{LCD}) (5)	T_A = -40 °C to 25 °C	3.9	8.75	
				T_A = 55 °C	4.15	9.3	
				T_A = 85 °C	4.5	10.2	
				T_A = 105 °C	5.6	13.5	
				T_A = 125 °C	6.8	16.3	

Table 24. Total current consumption and timing in Active-halt mode at V_{DD} = 1.65 V to 3.6 V

Symbol	Parameter	Conditions (1)			Typ	Max	Unit
$I_{DD(AH)}$	Supply current in Active-halt mode	LSE external clock (32.768 kHz) (6)	LCD OFF(7)	T_A = -40 °C to 25 °C	0.5	1.2	µA
				T_A = 55 °C	0.62	1.4	
				T_A = 85 °C	0.88	2.1	
				T_A = 105 °C	2.1	4.85	
				T_A = 125 °C	4.8	11	
			LCD ON (static duty/ external V_{LCD}) (3)	T_A = -40 °C to 25 °C	0.85	1.9	
				T_A = 55 °C	0.95	2.2	
				T_A = 85 °C	1.3	3.2	
				T_A = 105 °C	2.3	5.3	
				T_A = 125 °C	5.0	12	
			LCD ON (1/4 duty/ external V_{LCD}) (4)	T_A = -40 °C to 25 °C	1.5	2.5	
				T_A = 55 °C	1.6	3.8	
				T_A = 85 °C	1.8	4.2	
				T_A = 105 °C	2.9	7.0	
				T_A = 125 °C	5.7	14	
			LCD ON (1/4 duty/ internal V_{LCD}) (5)	T_A = -40 °C to 25 °C	3.4	7.6	
				T_A = 55 °C	3.7	8.3	
				T_A = 85 °C	3.9	9.2	
				T_A = 105 °C	5.0	14.5	
				T_A = 125 °C	6.3	15.2	
$I_{DD(WUFAH)}$	Supply current during wakeup time from Active-halt mode (using HSI)	-		-	2.4	-	mA
$t_{WU_HSI(AH)}$(8)(9)	Wakeup time from Active-halt mode to Run mode (using HSI)	-		-	4.7	7	µs
$t_{WU_LSI(AH)}$(8)(9)	Wakeup time from Active-halt mode to Run mode (using LSI)	-		-	150	-	µs

1. No floating I/O, unless otherwise specified.
2. RTC enabled. Clock source = LSI
3. RTC enabled, LCD enabled with external V_{LCD} = 3 V, static duty, division ratio = 256, all pixels active, no LCD connected.
4. RTC enabled, LCD enabled with external V_{LCD}, 1/4 duty, 1/3 bias, division ratio = 64, all pixels active, no LCD connected.
5. LCD enabled with internal LCD booster V_{LCD} = 3 V, 1/4 duty, 1/3 bias, division ratio = 64, all pixels active, no LCD connected.
6. Oscillator bypassed (LSEBYP = 1 in CLK_ECKCR). When configured for external crystal, the LSE consumption ($I_{DD\ LSE}$) must be added. Refer to *Table 32*.
7. RTC enabled. Clock source = LSE.
8. Wakeup time until start of interrupt vector fetch.
   The first word of interrupt routine is fetched 4 CPU cycles after t_{WU}.
9. ULP=0 or ULP=1 and FWU=1 in the PWR_CSR2 register.

Table 25. Typical current consumption in Active-halt mode, RTC clocked by LSE external crystal

Symbol	Parameter	Condition[1]		Typ	Unit
$I_{DD(AH)}$ [2]	Supply current in Active-halt mode	V_{DD} = 1.8 V	LSE	1.15	µA
			LSE/32[3]	1.05	
		V_{DD} = 3 V	LSE	1.30	
			LSE/32[3]	1.20	
		V_{DD} = 3.6 V	LSE	1.45	
			LSE/32[3]	1.35	

1. No floating I/O, unless otherwise specified.
2. Based on measurements on bench with 32.768 kHz external crystal oscillator.
3. RTC clock is LSE divided by 32.

In the following table, data is based on characterization results, unless otherwise specified.

Table 26. Total current consumption and timing in Halt mode at V_{DD} = 1.65 to 3.6 V

Symbol	Parameter	Condition[1]	Typ	Max	Unit
$I_{DD(Halt)}$	Supply current in Halt mode (Ultra-low-power ULP bit =1 in the PWR_CSR2 register)	T_A = -40 °C to 25 °C	350	1400[2]	nA
		T_A = 55 °C	580	2000	
		T_A = 85 °C	1160	2800[2]	
		T_A = 105 °C	2560	6700[2]	
		T_A = 125 °C	4.4	13[2]	µA
$I_{DD(WUHalt)}$	Supply current during wakeup time from Halt mode (using HSI)	-	2.4	-	mA
$t_{WU_HSI(Halt)}$ [3][4]	Wakeup time from Halt to Run mode (using HSI)	-	4.7	7	µs
$t_{WU_LSI(Halt)}$ [3][4]	Wakeup time from Halt mode to Run mode (using LSI)	-	150	-	µs

1. T_A = -40 to 125 °C, no floating I/O, unless otherwise specified.
2. Tested in production.
3. ULP=0 or ULP=1 and FWU=1 in the PWR_CSR2 register.
4. Wakeup time until start of interrupt vector fetch.
The first word of interrupt routine is fetched 4 CPU cycles after t_{WU}.

Current consumption of on-chip peripherals

Table 27. Peripheral current consumption

Symbol	Parameter		Typ. V_{DD} = 3.0 V	Unit
$I_{DD(TIM1)}$	TIM1 supply current(1)		13	µA/MHz
$I_{DD(TIM2)}$	TIM2 supply current (1)		8	
$I_{DD(TIM3)}$	TIM3 supply current (1)		8	
$I_{DD(TIM4)}$	TIM4 timer supply current (1)		3	
$I_{DD(USART1)}$	USART1 supply current (2)		6	
$I_{DD(SPI1)}$	SPI1 supply current (2)		3	
$I_{DD(I2C1)}$	I^2C1 supply current (2)		5	
$I_{DD(DMA1)}$	DMA1 supply current(2)		3	
$I_{DD(WWDG)}$	WWDG supply current(2)		2	
$I_{DD(ALL)}$	Peripherals ON(3)		44	µA/MHz
$I_{DD(ADC1)}$	ADC1 supply current(4)		1500	µA
$I_{DD(DAC)}$	DAC supply current(5)		370	µA
$I_{DD(COMP1)}$	Comparator 1 supply current(6)		0.160	µA
$I_{DD(COMP2)}$	Comparator 2 supply current(6)	Slow mode	2	
		Fast mode	5	
$I_{DD(PVD/BOR)}$	Power voltage detector and brownout Reset unit supply current (7)		2.6	
$I_{DD(BOR)}$	Brownout Reset unit supply current (7)		2.4	
$I_{DD(IDWDG)}$	Independent watchdog supply current	including LSI supply current	0.45	
		excluding LSI supply current	0.05	

1. Data based on a differential I_{DD} measurement between all peripherals OFF and a timer counter running at 16 MHz. The CPU is in Wait mode in both cases. No IC/OC programmed, no I/O pins toggling. Not tested in production.
2. Data based on a differential I_{DD} measurement between the on-chip peripheral in reset configuration and not clocked and the on-chip peripheral when clocked and not kept under reset. The CPU is in Wait mode in both cases. No I/O pins toggling. Not tested in production.
3. Peripherals listed above the $I_{DD(ALL)}$ parameter ON: TIM1, TIM2, TIM3, TIM4, USART1, SPI1, I2C1, DMA1, WWDG.
4. Data based on a differential I_{DD} measurement between ADC in reset configuration and continuous ADC conversion.
5. Data based on a differential I_{DD} measurement between DAC in reset configuration and continuous DAC conversion of V_{DD} /2. Floating DAC output.
6. Data based on a differential I_{DD} measurement between COMP1 or COMP2 in reset configuration and COMP1 or COMP2 enabled with static inputs. Supply current of internal reference voltage excluded.
7. Including supply current of internal reference voltage.

Table 28. Current consumption under external reset

Symbol	Parameter	Conditions		Typ	Unit
$I_{DD(RST)}$	Supply current under external reset (1)	All pins are externally tied to V_{DD}	V_{DD} = 1.8 V	48	µA
			V_{DD} = 3 V	76	
			V_{DD} = 3.6 V	91	

1. All pins except PA0, PB0 and PB4 are floating under reset. PA0, PB0 and PB4 are configured with pull-up under reset.

9.3.4 Clock and timing characteristics

HSE external clock (HSEBYP = 1 in CLK_ECKCR)

Subject to general operating conditions for V_{DD} and T_A.

Table 29. HSE external clock characteristics

Symbol	Parameter	Conditions	Min	Typ	Max	Unit
f_{HSE_ext}	External clock source frequency(1)	-	1	-	16	MHz
V_{HSEH}	OSC_IN input pin high level voltage		0.7 x V_{DD}	-	V_{DD}	V
V_{HSEL}	OSC_IN input pin low level voltage		V_{SS}	-	0.3 x V_{DD}	
$C_{in(HSE)}$	OSC_IN input capacitance(1)	-	-	2.6	-	pF
I_{LEAK_HSE}	OSC_IN input leakage current	$V_{SS} < V_{IN} < V_{DD}$	-	-	±1	µA

1. Data guaranteed by design.

LSE external clock (LSEBYP=1 in CLK_ECKCR)

Subject to general operating conditions for V_{DD} and T_A.

Table 30. LSE external clock characteristics

Symbol	Parameter	Min	Typ	Max	Unit
f_{LSE_ext}	External clock source frequency(1)	-	32.768	-	kHz
V_{LSEH}(2)	OSC32_IN input pin high level voltage	0.7 x V_{DD}	-	V_{DD}	V
V_{LSEL}(2)	OSC32_IN input pin low level voltage	V_{SS}	-	0.3 x V_{DD}	
$C_{in(LSE)}$	OSC32_IN input capacitance(1)	-	0.6	-	pF
I_{LEAK_LSE}	OSC32_IN input leakage current	-	-	±1	µA

1. Data guaranteed by design.
2. Data based on characterization results.

HSE crystal/ceramic resonator oscillator

The HSE clock can be supplied with a 1 to 16 MHz crystal/ceramic resonator oscillator. All the information given in this paragraph is based on characterization results with specified typical external components. In the application, the resonator and the load capacitors have to be placed as close as possible to the oscillator pins in order to minimize output distortion and startup stabilization time. Refer to the crystal resonator manufacturer for more details (frequency, package, accuracy...).

Table 31. HSE oscillator characteristics

Symbol	Parameter	Conditions	Min	Typ	Max	Unit
f_{HSE}	High speed external oscillator frequency	-	1	-	16	MHz
R_F	Feedback resistor	-	-	200	-	kΩ
C(1)	Recommended load capacitance (2)	-	-	20	-	pF
$I_{DD(HSE)}$	HSE oscillator power consumption	C = 20 pF, f_{OSC} = 16 MHz	-	-	2.5 (startup) 0.7 (stabilized)(3)	mA
		C = 10 pF, f_{OSC} =16 MHz	-	-	2.5 (startup) 0.46 (stabilized)(3)	
g_m	Oscillator transconductance	-	3.5(3)	-	-	mA/V
$t_{SU(HSE)}$(4)	Startup time	V_{DD} is stabilized	-	1	-	ms

1. $C=C_{L1}=C_{L2}$ is approximately equivalent to 2 x crystal C_{LOAD}.
2. The oscillator selection can be optimized in terms of supply current using a high quality resonator with small R_m value. Refer to crystal manufacturer for more details
3. Data guaranteed by design.
4. $t_{SU(HSE)}$ is the startup time measured from the moment it is enabled (by software) to a stabilized 16 MHz oscillation. This value is measured for a standard crystal resonator and it can vary significantly with the crystal manufacturer.

Figure 17. HSE oscillator circuit diagram

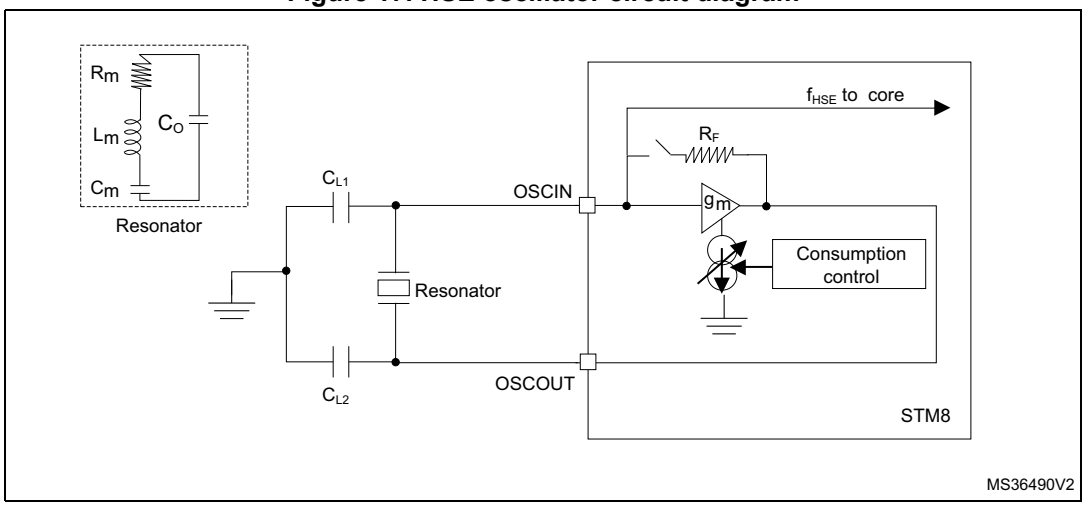

HSE oscillator critical g_m formula

$$g_{mcrit} = (2 \times \Pi \times f_{HSE})^2 \times R_m(2Co + C)^2$$

R_m: Motional resistance (see crystal specification), L_m: Motional inductance (see crystal specification),
C_m: Motional capacitance (see crystal specification), Co: Shunt capacitance (see crystal specification),
C_{L1}=C_{L2}=C: Grounded external capacitance
$g_m >> g_{mcrit}$

LSE crystal/ceramic resonator oscillator

The LSE clock can be supplied with a 32.768 kHz crystal/ceramic resonator oscillator. All the information given in this paragraph is based on characterization results with specified typical external components. In the application, the resonator and the load capacitors have to be placed as close as possible to the oscillator pins in order to minimize output distortion and startup stabilization time. Refer to the crystal resonator manufacturer for more details (frequency, package, accuracy...).

Table 32. LSE oscillator characteristics

Symbol	Parameter	Conditions	Min	Typ	Max	Unit
f_{LSE}	Low speed external oscillator frequency	-	-	32.768	-	kHz
R_F	Feedback resistor	ΔV = 200 mV	-	1.2	-	MΩ
C(1)	Recommended load capacitance (2)	-	-	8	-	pF
$I_{DD(LSE)}$	LSE oscillator power consumption	-	-	-	1.4(3)	µA
		V_{DD} = 1.8 V	-	450	-	nA
		V_{DD} = 3 V	-	600	-	
		V_{DD} = 3.6 V	-	750	-	
g_m	Oscillator transconductance	-	3(3)	-	-	µA/V
$t_{SU(LSE)}$(4)	Startup time	V_{DD} is stabilized	-	1	-	s

1. C=C_{L1}=C_{L2} is approximately equivalent to 2 x crystal C_{LOAD}.
2. The oscillator selection can be optimized in terms of supply current using a high quality resonator with a small R_m value. Refer to crystal manufacturer for more details.
3. Data guaranteed by design.
4. $t_{SU(LSE)}$ is the startup time measured from the moment it is enabled (by software) to a stabilized 32.768 kHz oscillation. This value is measured for a standard crystal resonator and it can vary significantly with the crystal manufacturer.

Figure 18. LSE oscillator circuit diagram

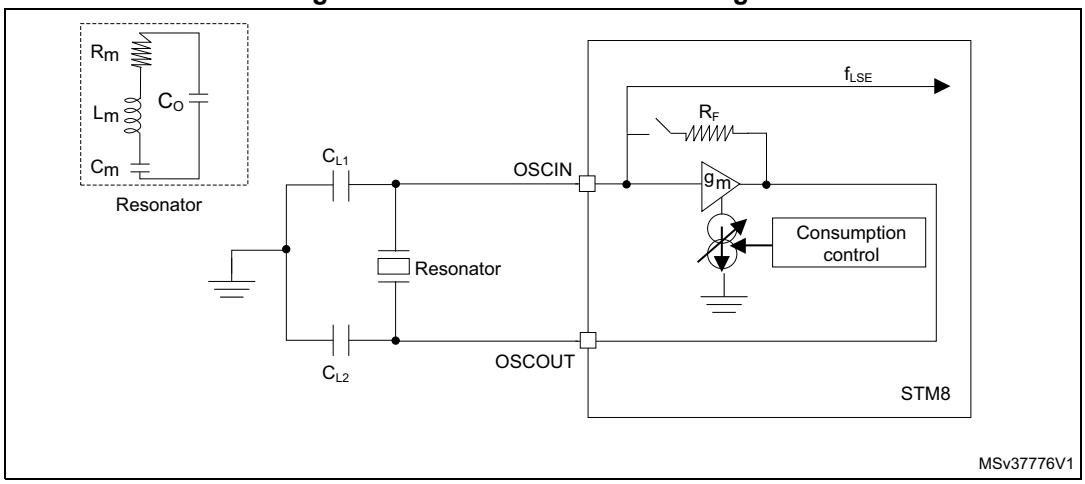

Internal clock sources

Subject to general operating conditions for V_{DD}, and T_A.

High speed internal RC oscillator (HSI)

In the following table, data is based on characterization results, not tested in production, unless otherwise specified.

Table 33. HSI oscillator characteristics

Symbol	Parameter	Conditions[1]	Min	Typ	Max	Unit
f_{HSI}	Frequency	V_{DD} = 3.0 V	-	16	-	MHz
ACC_{HSI}	Accuracy of HSI oscillator (factory calibrated)	V_{DD} = 3.0 V, T_A = 25 °C	-1 [2]	-	1[2]	%
		V_{DD} = 3.0 V, 0 °C ≤T_A ≤ 55 °C	-1.5	-	1.5	%
		V_{DD} = 3.0 V, -10 °C ≤T_A ≤ 70 °C	-2	-	2	%
		V_{DD} = 3.0 V, -10 °C ≤T_A ≤ 85 °C	-2.5	-	2	%
		V_{DD} = 3.0 V, -10 °C ≤T_A ≤ 125 °C	-4.5	-	2	%
		1.65 V ≤V_{DD} ≤ 3.6 V, -40 °C ≤T_A ≤ 125 °C	-4.5	-	3	%
TRIM	HSI user trimming step[3]	Trimming code ≠ multiple of 16	-	0.4	0.7	%
		Trimming code = multiple of 16	-		± 1.5	%
$t_{su(HSI)}$	HSI oscillator setup time (wakeup time)	-	-	3.7	6[4]	µs
$I_{DD(HSI)}$	HSI oscillator power consumption	-	-	100	140[4]	µA

1. V_{DD} = 3.0 V, T_A = -40 to 125 °C unless otherwise specified.
2. Tested in production.
3. The trimming step differs depending on the trimming code. It is usually negative on the codes which are multiples of 16 (0x00, 0x10, 0x20, 0x30...0xE0). Refer to the AN3101 “STM8L15x internal RC oscillator calibration” application note for more details.
4. Guaranteed by design.

Figure 19. Typical HSI frequency vs V_{DD}

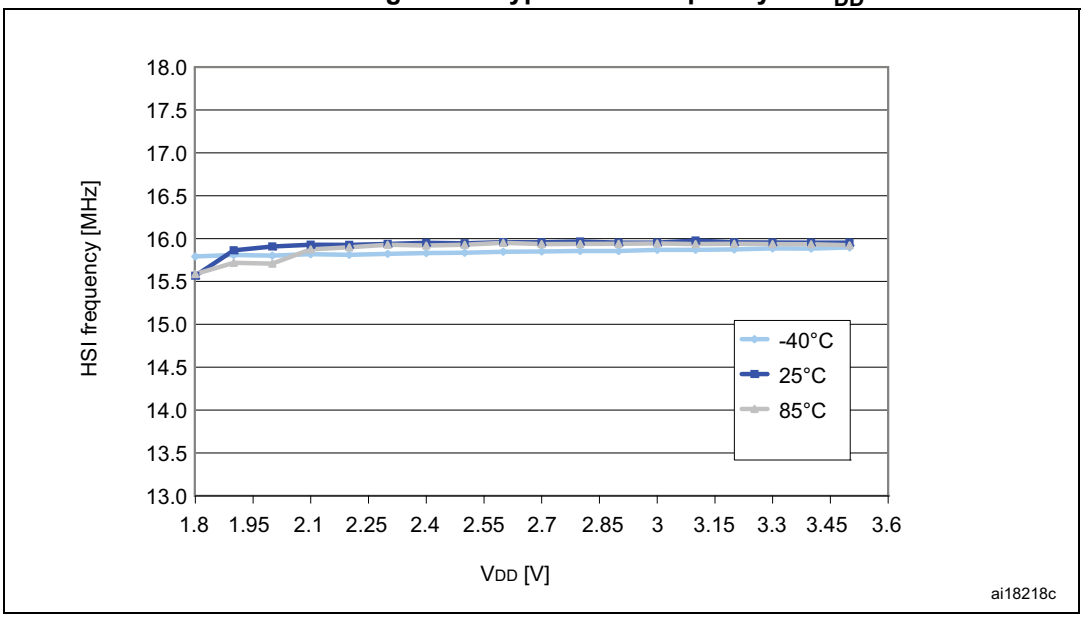

Low speed internal RC oscillator (LSI)

In the following table, data is based on characterization results, not tested in production.

Table 34. LSI oscillator characteristics

Symbol	Parameter (1)	Conditions(1)	Min	Typ	Max	Unit
f_{LSI}	Frequency	-	26	38	56	kHz
$t_{su(LSI)}$	LSI oscillator wakeup time	-	-	-	200(2)	µs
$I_{DD(LSI)}$	LSI oscillator frequency drift(3)	0 °C $\leq T_A \leq$ 85 °C	-12	-	11	%

1. V_{DD} = 1.65 V to 3.6 V, T_A = -40 to 125 °C unless otherwise specified.
2. Guaranteed by design.
3. This is a deviation for an individual part, once the initial frequency has been measured.

Figure 20. Typical LSI frequency vs. V_{DD}

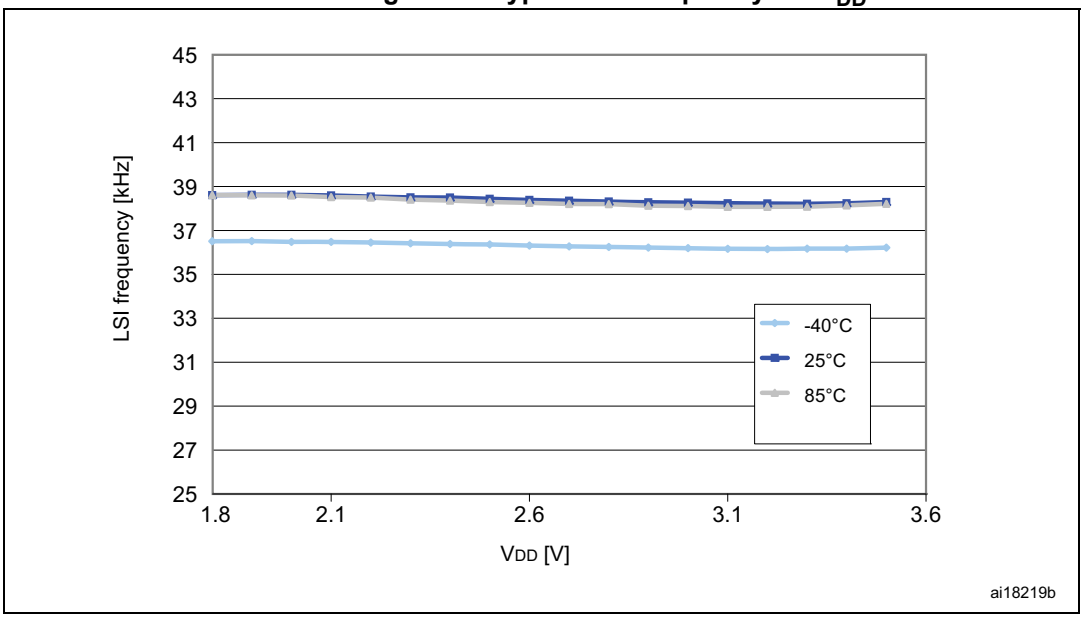

9.3.5 Memory characteristics

T_A = -40 to 125 °C unless otherwise specified.

Table 35. RAM and hardware registers

Symbol	Parameter	Conditions	Min	Typ	Max	Unit
V_{RM}	Data retention mode (1)	Halt mode (or Reset)	1.65	-	-	V

1. Minimum supply voltage without losing data stored in RAM (in Halt mode or under Reset) or in hardware registers (only in Halt mode). Guaranteed by characterization, not tested in production.

Flash memory

Table 36. Flash program and data EEPROM memory

Symbol	Parameter	Conditions	Min	Typ	Max (1)	Unit
V_{DD}	Operating voltage (all modes, read/write/erase)	f_{SYSCLK} = 16 MHz	1.65	-	3.6	V
t_{prog}	Programming time for 1 or 64 bytes (block) erase/write cycles (on programmed byte)	-	-	6	-	ms
	Programming time for 1 to 64 bytes (block) write cycles (on erased byte)	-	-	3	-	ms
I_{prog}	Programming/ erasing consumption	T_A=+25 °C, V_{DD} = 3.0 V	-	0.7	-	mA
		T_A=+25 °C, V_{DD} = 1.8 V	-	0.7	-	
t_{RET}(2)	Data retention (program memory) after 10000 erase/write cycles at T_A= –40 to +85 °C (6 suffix)	T_{RET} = +85 °C	30(1)	-	-	years
	Data retention (program memory) after 10000 erase/write cycles at T_A= –40 to +125 °C (3 suffix)	T_{RET} = +125 °C	5(1)	-	-	
	Data retention (data memory) after 300000 erase/write cycles at T_A= –40 to +85 °C (6 suffix)	T_{RET} = +85 °C	30(1)	-	-	
	Data retention (data memory) after 300000 erase/write cycles at T_A= –40 to +125 °C (3 suffix)	T_{RET} = +125 °C	5(1)	-	-	
N_{RW} (3)	Erase/write cycles (program memory)	T_A = –40 to +85 °C (6 suffix), T_A = –40 to +125 °C (3 suffix)	10(1)	-	-	kcycles
	Erase/write cycles (data memory)		300(1) (4)	-	-	

1. Data based on characterization results.
2. Conforming to JEDEC JESD22a117
3. The physical granularity of the memory is 4 bytes, so cycling is performed on 4 bytes even when a write/erase operation addresses a single byte.
4. Data based on characterization performed on the whole data memory.

9.3.6 I/O current injection characteristics

As a general rule, current injection to the I/O pins, due to external voltage below V_{SS} or above V_{DD} (for standard pins) should be avoided during normal product operation. However, in order to give an indication of the robustness of the microcontroller in cases when abnormal injection accidentally happens, susceptibility tests are performed on a sample basis during device characterization.

Functional susceptibility to I/O current injection

While a simple application is executed on the device, the device is stressed by injecting current into the I/O pins programmed in floating input mode. While current is injected into the I/O pin, one at a time, the device is checked for functional failures.

The failure is indicated by an out of range parameter: ADC error, out of spec current injection on adjacent pins or other functional failure (for example reset, oscillator frequency deviation, LCD levels, etc.).

The test results are given in the following table.

Table 37. I/O current injection susceptibility

Symbol	Description	Functional susceptibility		Unit
		Negative injection	Positive injection	
I_{INJ}	Injected current on true open-drain pins (PC0 and PC1)	-5	+0	mA
	Injected current on all five-volt tolerant (FT) pins	-5	+0	
	Injected current on all 3.6 V tolerant (TT) pins	-5	+0	
	Injected current on any other pin	-5	+5	

9.3.7 I/O port pin characteristics

General characteristics

Subject to general operating conditions for V_{DD} and T_A unless otherwise specified. All unused pins must be kept at a fixed voltage: using the output mode of the I/O for example or an external pull-up or pull-down resistor.

Table 38. I/O static characteristics

Symbol	Parameter	Conditions[1]	Min	Typ	Max	Unit
V_{IL}	Input low level voltage[2]	Input voltage on true open-drain pins (PC0 and PC1)	V_{SS}-0.3	-	0.3 x V_{DD}	V
		Input voltage on five-volt tolerant (FT) pins (PA7 and PE0)	V_{SS}-0.3	-	0.3 x V_{DD}	
		Input voltage on 3.6 V tolerant (TT) pins	V_{SS}-0.3	-	0.3 x V_{DD}	
		Input voltage on any other pin	V_{SS}-0.3	-	0.3 x V_{DD}	
V_{IH}	Input high level voltage [2]	Input voltage on true open-drain pins (PC0 and PC1) with V_{DD} < 2 V	0.70 x V_{DD}	-	5.2	V
		Input voltage on true open-drain pins (PC0 and PC1) with $V_{DD} \geq$ 2 V		-	5.5	
		Input voltage on five-volt tolerant (FT) pins (PA7 and PE0) with V_{DD} < 2 V	0.70 x V_{DD}	-	5.2	
		Input voltage on five-volt tolerant (FT) pins (PA7 and PE0) with $V_{DD} \geq$ 2 V		-	5.5	
		Input voltage on 3.6 V tolerant (TT) pins		-	3.6	
		Input voltage on any other pin	0.70 x V_{DD}	-	V_{DD}+0.3	
V_{hys}	Schmitt trigger voltage hysteresis [3]	I/Os	-	200	-	mV
		True open drain I/Os	-	200	-	
I_{lkg}	Input leakage current [4]	$V_{SS} \leq V_{IN} \leq V_{DD}$ High sink I/Os	-	-	50 [5]	nA
		$V_{SS} \leq V_{IN} \leq V_{DD}$ True open drain I/Os	-	-	200[5]	
		$V_{SS} \leq V_{IN} \leq V_{DD}$ PA0 with high sink LED driver capability	-	-	200[5]	
R_{PU}	Weak pull-up equivalent resistor[2][6]	$V_{IN}=V_{SS}$	30	45	60	kΩ
C_{IO}	I/O pin capacitance	-	-	5	-	pF

1. V_{DD} = 3.0 V, T_A = -40 to 125 °C unless otherwise specified.
2. Data based on characterization results.
3. Hysteresis voltage between Schmitt trigger switching levels. Based on characterization results, not tested.
4. The max. value may be exceeded if negative current is injected on adjacent pins.
5. Not tested in production.

6. R_{PU} pull-up equivalent resistor based on a resistive transistor (corresponding I_{PU} current characteristics described in *Figure 24*).

Figure 21. Typical V_{IL} and V_{IH} vs V_{DD} (high sink I/Os)

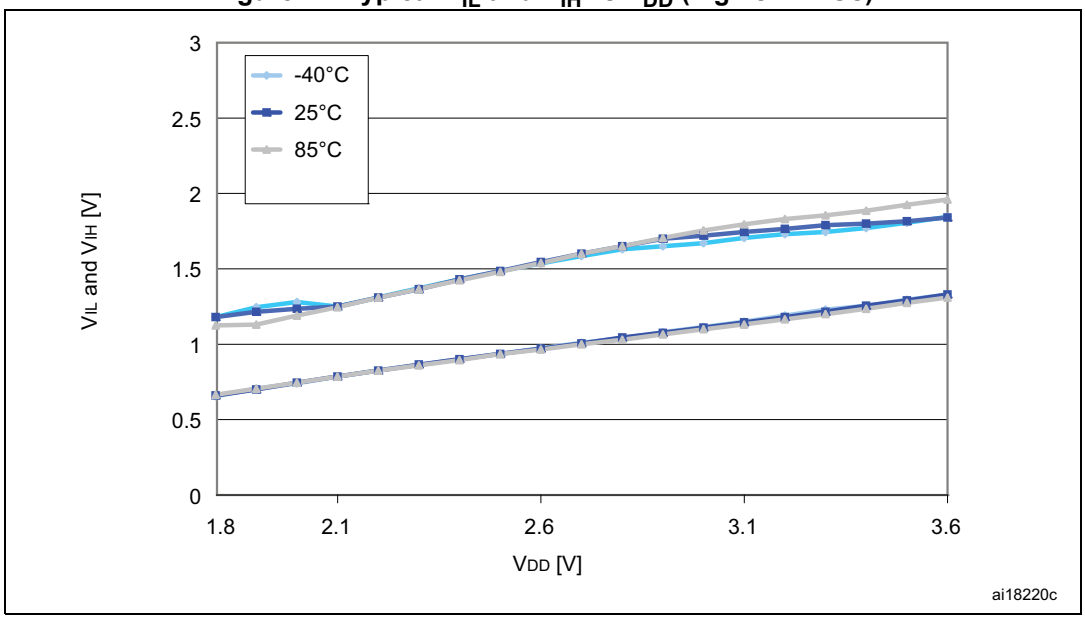

Figure 22. Typical V_{IL} and V_{IH} vs V_{DD} (true open drain I/Os)

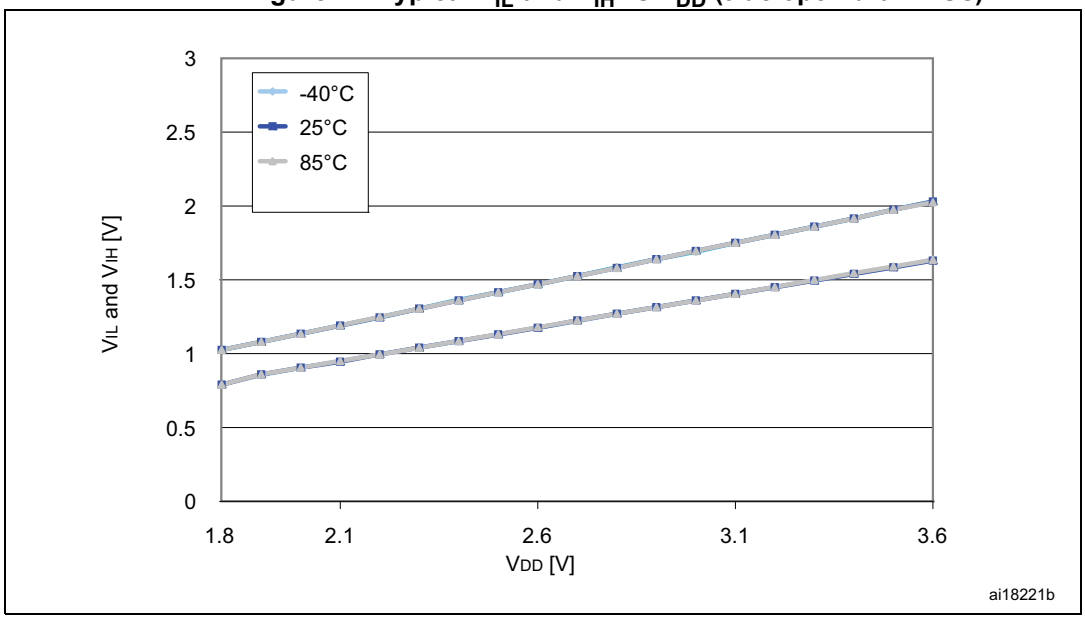

Figure 23. Typical pull-up resistance R_{PU} vs V_{DD} with $V_{IN}=V_{SS}$

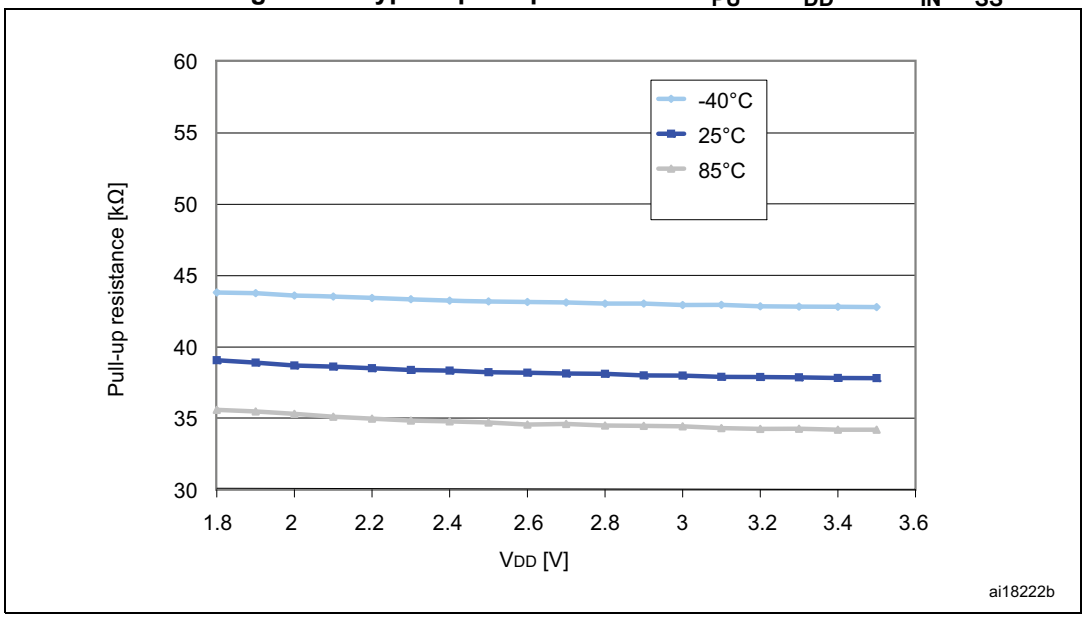

Figure 24. Typical pull-up current I_{pu} vs V_{DD} with $V_{IN}=V_{SS}$

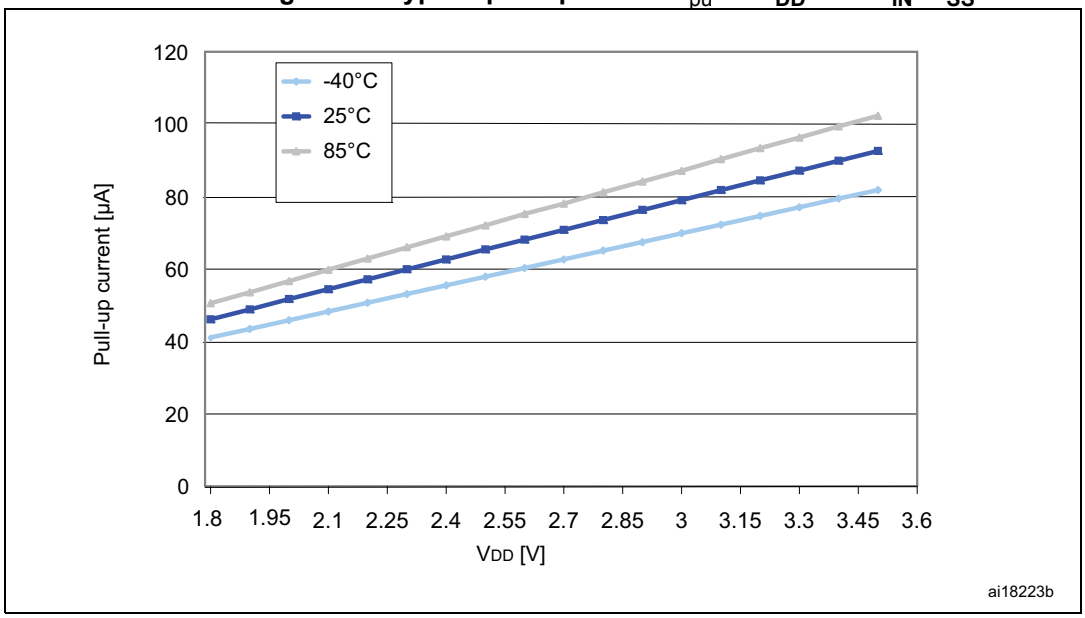

Output driving current

Subject to general operating conditions for V_{DD} and T_A unless otherwise specified.

Table 39. Output driving current (high sink ports)

I/O Type	Symbol	Parameter	Conditions	Min	Max	Unit
High sink	V_{OL} (1)	Output low level voltage for an I/O pin	I_{IO} = +2 mA, V_{DD} = 3.0 V	-	0.45	V
			I_{IO} = +2 mA, V_{DD} = 1.8 V	-	0.45	V
			I_{IO} = +10 mA, V_{DD} = 3.0 V	-	0.7	V
	V_{OH} (2)	Output high level voltage for an I/O pin	I_{IO} = -2 mA, V_{DD} = 3.0 V	V_{DD}-0.45	-	V
			I_{IO} = -1 mA, V_{DD} = 1.8 V	V_{DD}-0.45	-	V
			I_{IO} = -10 mA, V_{DD} = 3.0 V	V_{DD}-0.7	-	V

1. The I_{IO} current sunk must always respect the absolute maximum rating specified in *Table 16* and the sum of I_{IO} (I/O ports and control pins) must not exceed I_{VSS}.
2. The I_{IO} current sourced must always respect the absolute maximum rating specified in *Table 16* and the sum of I_{IO} (I/O ports and control pins) must not exceed I_{VDD}.

Table 40. Output driving current (true open drain ports)

I/O Type	Symbol	Parameter	Conditions	Min	Max	Unit
Open drain	V_{OL} (1)	Output low level voltage for an I/O pin	I_{IO} = +3 mA, V_{DD} = 3.0 V	-	0.45	V
			I_{IO} = +1 mA, V_{DD} = 1.8 V	-	0.45	

1. The I_{IO} current sunk must always respect the absolute maximum rating specified in *Table 16* and the sum of I_{IO} (I/O ports and control pins) must not exceed I_{VSS}.

Table 41. Output driving current (PA0 with high sink LED driver capability)

I/O Type	Symbol	Parameter	Conditions	Min	Max	Unit
IR	V_{OL} (1)	Output low level voltage for an I/O pin	I_{IO} = +20 mA, V_{DD} = 2.0 V	-	0.45	V

1. The I_{IO} current sunk must always respect the absolute maximum rating specified in *Table 16* and the sum of I_{IO} (I/O ports and control pins) must not exceed I_{VSS}.

Figure 25. Typ. V_{OL} @ V_{DD} = 3.0 V (high sink ports)

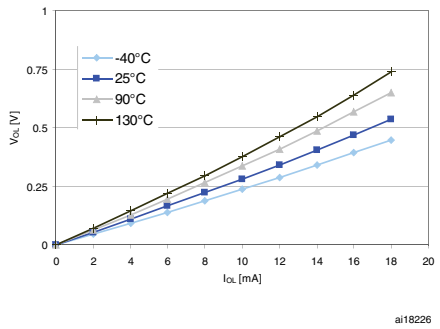

Figure 26. Typ. V_{OL} @ V_{DD} = 1.8 V (high sink ports)

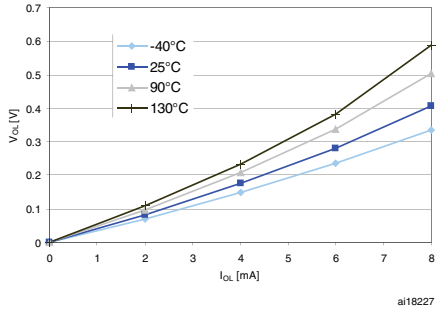

Figure 27. Typ. V_{OL} @ V_{DD} = 3.0 V (true open drain ports)

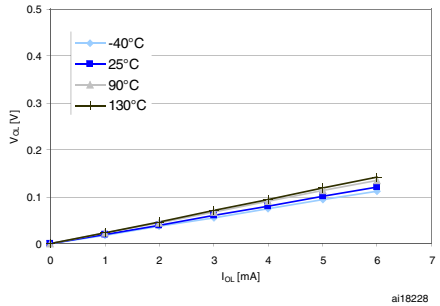

Figure 28. Typ. V_{OL} @ V_{DD} = 1.8 V (true open drain ports)

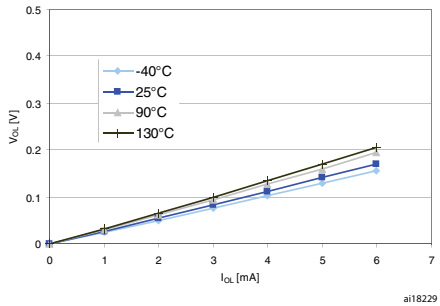

Figure 29. Typ. V_{DD} - V_{OH} @ V_{DD} = 3.0 V (high sink ports)

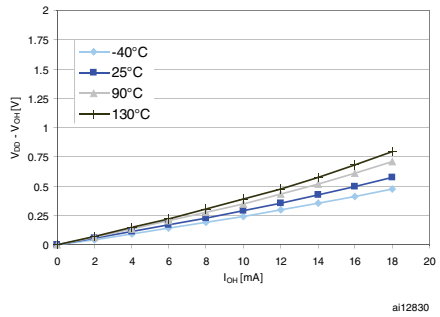

Figure 30. Typ. V_{DD} - V_{OH} @ V_{DD} = 1.8 V (high sink ports)

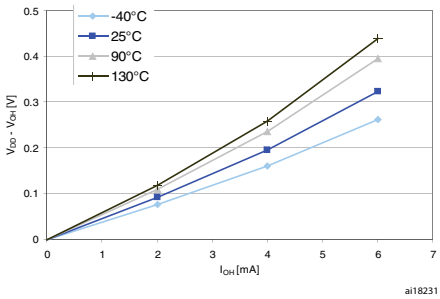

NRST pin

Subject to general operating conditions for V_{DD} and T_A unless otherwise specified.

Table 42. $\overline{NRST}$ pin characteristics

Symbol	Parameter	Conditions	Min	Typ	Max	Unit
$V_{IL(NRST)}$	NRST input low level voltage (1)	-	V_{SS}	-	0.8	V
$V_{IH(NRST)}$	NRST input high level voltage (1)	-	1.4	-	V_{DD}	
$V_{OL(NRST)}$	NRST output low level voltage (1)	I_{OL} = 2 mA for 2.7 V ≤V_{DD} ≤3.6 V	-	-	0.4	
		I_{OL} = 1.5 mA for V_{DD} < 2.7 V	-	-		
V_{HYST}	NRST input hysteresis(3)	-	10%V_{DD} (2)	-	-	mV
$R_{PU(NRST)}$	NRST pull-up equivalent resistor (1)	-	30	45	60	kΩ
$V_{F(NRST)}$	NRST input filtered pulse (3)	-	-	-	50	ns
$V_{NF(NRST)}$	NRST input not filtered pulse (3)	-	300	-	-	

1. Data based on characterization results.
2. 200 mV min.
3. Data guaranteed by design.

Figure 31. Typical NRST pull-up resistance R_{PU} vs V_{DD}

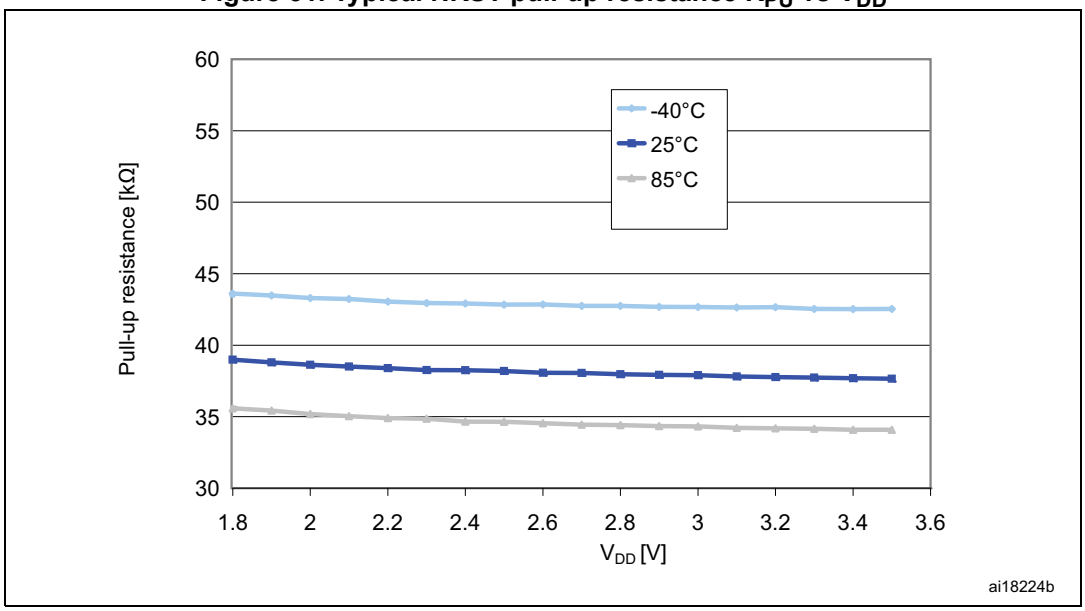

Figure 32. Typical NRST pull-up current I_{pu} vs V_{DD}

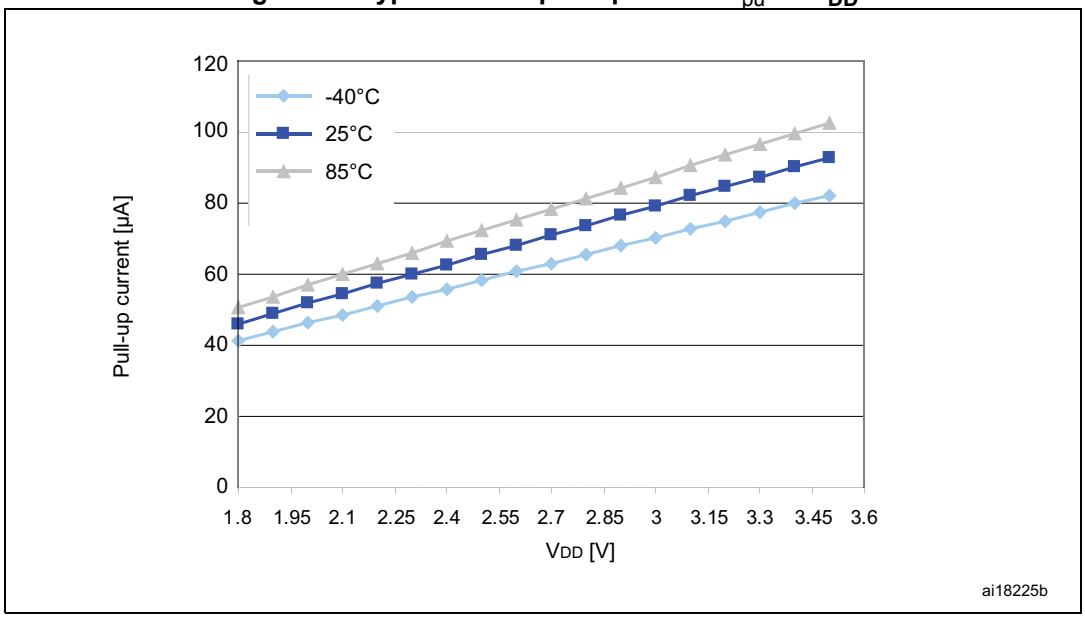

The reset network shown in *Figure 33* protects the device against parasitic resets. The user must ensure that the level on the NRST pin can go below the $V_{IL(NRST)}$ max. level specified in *Table 42*. Otherwise the reset is not taken into account internally.

For power consumption sensitive applications, the external reset capacitor value can be reduced to limit the charge/discharge current. If the NRST signal is used to reset the external circuitry, attention must be paid to the charge/discharge time of the external capacitor to fulfill the external devices reset timing conditions. The minimum recommended capacity is 10 nF.

Figure 33. Recommended NRST pin configuration

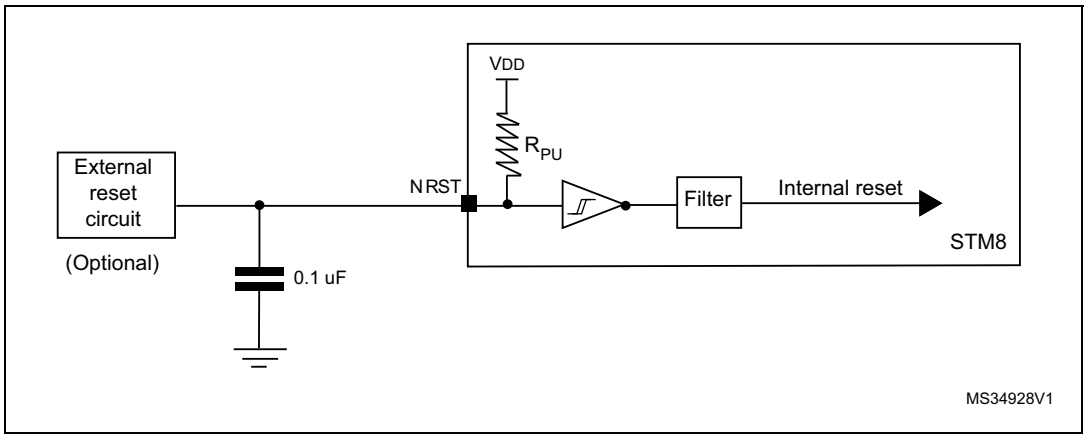

9.3.8 Communication interfaces

SPI1 - Serial peripheral interface

Unless otherwise specified, the parameters given in *Table 43* are derived from tests performed under ambient temperature, f_{SYSCLK} frequency and V_{DD} supply voltage conditions summarized in *Section 9.3.1*. Refer to I/O port characteristics for more details on the input/output alternate function characteristics (NSS, SCK, MOSI, MISO).

Table 43. SPI1 characteristics

Symbol	Parameter	Conditions[1]	Min	Max	Unit
f_{SCK} $1/t_{c(SCK)}$	SPI1 clock frequency	Master mode	0	8	MHz
		Slave mode	0	8	
$t_{r(SCK)}$ $t_{f(SCK)}$	SPI1 clock rise and fall time	Capacitive load: C = 30 pF	-	30	ns
$t_{su(NSS)}$[2]	NSS setup time	Slave mode	4 x $1/f_{SYSCLK}$	-	
$t_{h(NSS)}$[2]	NSS hold time	Slave mode	80	-	
$t_{w(SCKH)}$[2] $t_{w(SCKL)}$[2]	SCK high and low time	Master mode, f_{MASTER} = 8 MHz, f_{SCK}= 4 MHz	105	145	
$t_{su(MI)}$[2] $t_{su(SI)}$[2]	Data input setup time	Master mode	30	-	
		Slave mode	3	-	
$t_{h(MI)}$[2] $t_{h(SI)}$[2]	Data input hold time	Master mode	15	-	
		Slave mode	0	-	
$t_{a(SO)}$[2][3]	Data output access time	Slave mode	-	3x $1/f_{SYSCLK}$	
$t_{dis(SO)}$[2][4]	Data output disable time	Slave mode	30	-	
$t_{v(SO)}$[2]	Data output valid time	Slave mode (after enable edge)	-	60	
$t_{v(MO)}$[2]	Data output valid time	Master mode (after enable edge)	-	20	
$t_{h(SO)}$[2]	Data output hold time	Slave mode (after enable edge)	15	-	
$t_{h(MO)}$[2]		Master mode (after enable edge)	1	-	

1. Parameters are given by selecting 10 MHz I/O output frequency.
2. Values based on design simulation and/or characterization results.
3. Min time is for the minimum time to drive the output and max time is for the maximum time to validate the data.
4. Min time is for the minimum time to invalidate the output and max time is for the maximum time to put the data in Hi-Z.

Figure 34. SPI1 timing diagram - slave mode and CPHA=0

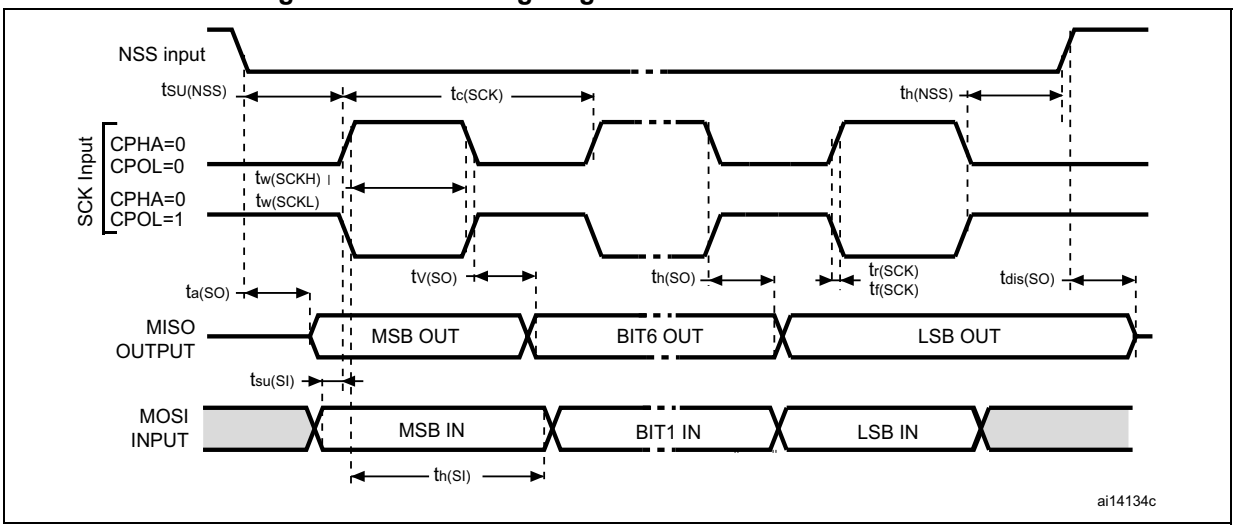

Figure 35. SPI1 timing diagram - slave mode and CPHA=1(1)

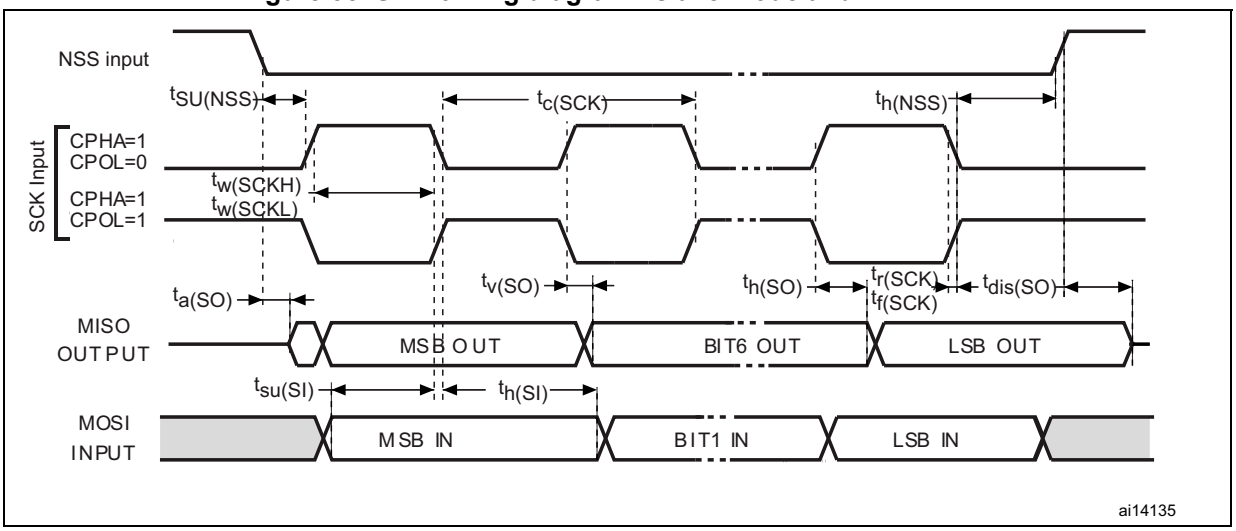

1. Measurement points are done at CMOS levels: $0.3V_{DD}$ and $0.7V_{DD}$.

Figure 36. SPI1 timing diagram - master mode(1)

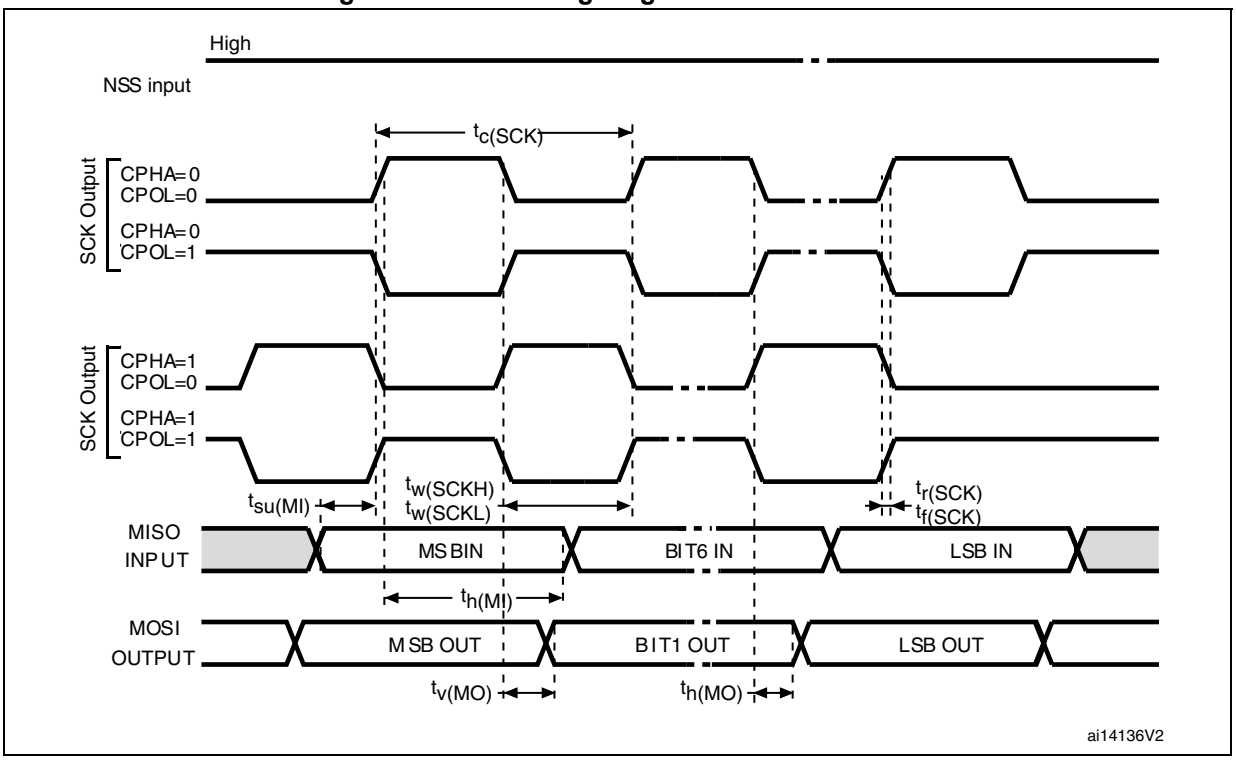

1. Measurement points are done at CMOS levels: $0.3V_{DD}$ and $0.7V_{DD}$.

I^2C - Inter IC control interface

Subject to general operating conditions for V_{DD}, f_{SYSCLK}, and T_A unless otherwise specified.

The STM8L I^2C interface (I2C1) meets the requirements of the Standard I^2C communication protocol described in the following table with the restriction mentioned below:

Refer to I/O port characteristics for more details on the input/output alternate function characteristics (SDA and SCL).

Table 44. I2C characteristics

Symbol	Parameter	Standard mode I^2C		Fast mode I^2C(1)		Unit
		Min(2)	Max (2)	Min (2)	Max (2)	
$t_{w(SCLL)}$	SCL clock low time	4.7	-	1.3	-	µs
$t_{w(SCLH)}$	SCL clock high time	4.0	-	0.6	-	
$t_{su(SDA)}$	SDA setup time	250	-	100	-	ns
$t_{h(SDA)}$	SDA data hold time	0	-	0	900	
$t_{r(SDA)}$ $t_{r(SCL)}$	SDA and SCL rise time	-	1000	-	300	
$t_{f(SDA)}$ $t_{f(SCL)}$	SDA and SCL fall time	-	300	-	300	
$t_{h(STA)}$	START condition hold time	4.0	-	0.6	-	µs
$t_{su(STA)}$	Repeated START condition setup time	4.7	-	0.6	-	
$t_{su(STO)}$	STOP condition setup time	4.0	-	0.6	-	µs
$t_{w(STO:STA)}$	STOP to START condition time (bus free)	4.7	-	1.3	-	µs
C_b	Capacitive load for each bus line	-	400		400	pF

1. f_{SYSCLK} must be at least equal to 8 MHz to achieve max fast I^2C speed (400 kHz).
2. Data based on standard I^2C protocol requirement, not tested in production.

Note: For speeds around 200 kHz, the achieved speed can have a± 5% tolerance
For other speed ranges, the achieved speed can have a± 2% tolerance
The above variations depend on the accuracy of the external components used.

Figure 37. Typical application with I²C bus and timing diagram 1)

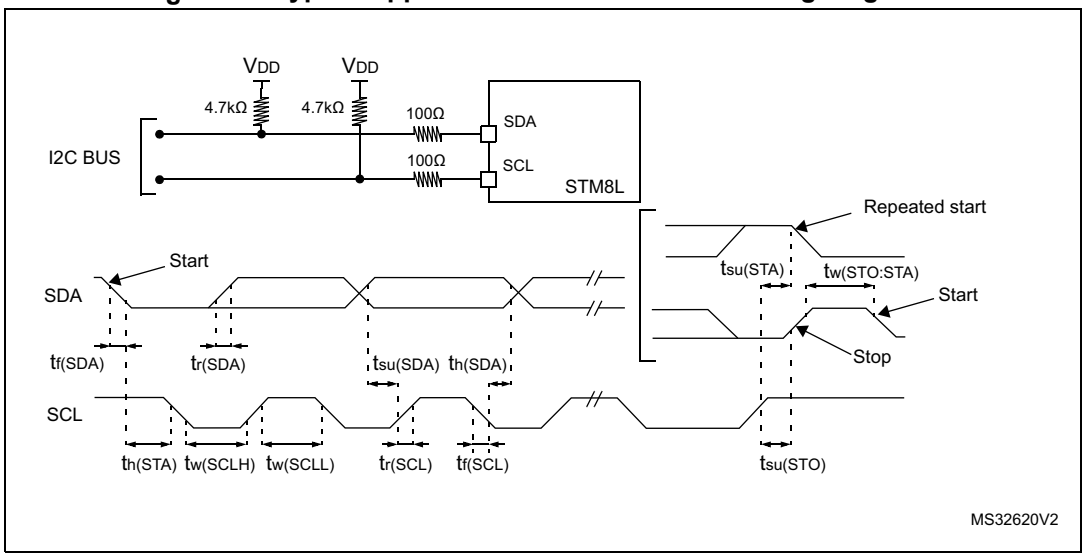

1. Measurement points are done at CMOS levels: 0.3 x V_{DD} and 0.7 x V_{DD}

9.3.9 LCD controller (STM8L152xx only)

In the following table, data is guaranteed by design. Not tested in production.

Table 45. LCD characteristics

Symbol	Parameter	Min	Typ	Max.	Unit
V_{LCD}	LCD external voltage	-	-	3.6	V
V_{LCD0}	LCD internal reference voltage 0	-	2.6	-	V
V_{LCD1}	LCD internal reference voltage 1	-	2.7	-	V
V_{LCD2}	LCD internal reference voltage 2	-	2.8	-	V
V_{LCD3}	LCD internal reference voltage 3	-	2.9	-	V
V_{LCD4}	LCD internal reference voltage 4	-	3.0	-	V
V_{LCD5}	LCD internal reference voltage 5	-	3.1	-	V
V_{LCD6}	LCD internal reference voltage 6	-	3.2	-	V
V_{LCD7}	LCD internal reference voltage 7	-	3.3	-	V
C_{EXT}	V_{LCD} external capacitance	0.1	-	2	µF
I_{DD}	Supply current(1) at V_{DD} = 1.8 V	-	3	-	µA
	Supply current(1) at V_{DD} = 3 V	-	3	-	µA
R_{HN} (2)	High value resistive network (low drive)	-	6.6	-	MΩ
R_{LN} (3)	Low value resistive network (high drive)	-	360	-	kΩ
V_{33}	Segment/Common higher level voltage	-	-	V_{LCDx}	V
V_{23}	Segment/Common 2/3 level voltage	-	$2/3V_{LCDx}$	-	V
V_{12}	Segment/Common 1/2 level voltage	-	$1/2V_{LCDx}$	-	V
V_{13}	Segment/Common 1/3 level voltage	-	$1/3V_{LCDx}$	-	V
V_0	Segment/Common lowest level voltage	0	-	-	V

1. LCD enabled with 3 V internal booster (LCD_CR1 = 0x08), 1/4 duty, 1/3 bias, division ratio= 64, all pixels active, no LCD connected.
2. R_{HN} is the total high value resistive network.
3. R_{LN} is the total low value resistive network.

VLCD external capacitor (STM8L152xx only)

The application can achieve a stabilized LCD reference voltage by connecting an external capacitor C_{EXT} to the V_{LCD} pin. C_{EXT} is specified in *Table 45*.

9.3.10 Embedded reference voltage

In the following table, data is based on characterization results, not tested in production, unless otherwise specified.

Table 46. Reference voltage characteristics

Symbol	Parameter	Conditions	Min	Typ	Max.	Unit
I_{REFINT}	Internal reference voltage consumption	-	-	1.4	-	µA
$T_{S_VREFINT}$(1)(2)	ADC sampling time when reading the internal reference voltage	-	-	5	10	µs
I_{BUF}(2)	Internal reference voltage buffer consumption (used for ADC)	-	-	13.5	25	µA
$V_{REFINT\ out}$	Reference voltage output	-	1.202(3)	1.224	1.242(3)	V
I_{LPBUF}(2)	Internal reference voltage low power buffer consumption (used for comparators or output)	-	-	730	1200	nA
I_{REFOUT}(2)	Buffer output current(4)	-	-	-	1	µA
C_{REFOUT}	Reference voltage output load	-	-	-	50	pF
$t_{VREFINT}$	Internal reference voltage startup time	-	-	2	3	ms
t_{BUFEN}(2)	Internal reference voltage buffer startup time once enabled (1)	-	-	-	10	µs
$ACC_{VREFINT}$	Accuracy of V_{REFINT} stored in the VREFINT_Factory_CONV byte(5)	-	-	-	± 5	mV
$STAB_{VREFINT}$	Stability of V_{REFINT} over temperature	-40 °C ≤T_A ≤ 125 °C	-	20	50	ppm/°C
	Stability of V_{REFINT} over temperature	0 °C ≤T_A ≤ 50 °C	-	-	20	ppm/°C
$STAB_{VREFINT}$	Stability of V_{REFINT} after 1000 hours	-	-	-	TBD	ppm

1. Defined when ADC output reaches its final value ±1/2LSB
2. Data guaranteed by design.
3. Tested in production at V_{DD} = 3 V ±10 mV.
4. To guaranty less than 1% V_{REFOUT} deviation.
5. Measured at V_{DD} = 3 V ±10 mV. This value takes into account V_{DD} accuracy and ADC conversion accuracy.

9.3.11 Temperature sensor

In the following table, data is based on characterization results, not tested in production, unless otherwise specified.

Table 47. TS characteristics

Symbol	Parameter	Min	Typ	Max.	Unit
V_{90}(1)	Sensor reference voltage at 90°C ±5 °C,	0.580	0.597	0.614	V
T_L	V_{SENSOR} linearity with temperature	-	±1	±2	°C
Avg_slope (2)	Average slope	1.59	1.62	1.65	mV/°C
$I_{DD(TEMP)}$(2)	Consumption	-	3.4	6	µA
T_{START}(2)(3)	Temperature sensor startup time	-	-	10	µs
T_{S_TEMP}(2)	ADC sampling time when reading the temperature sensor	10	-	-	µs

1. Tested in production at V_{DD} = 3 V ±10 mV. The 8 LSB of the V_{90} ADC conversion result are stored in the TS_Factory_CONV_V90 byte.
2. Data guaranteed by design.
3. Defined for ADC output reaching its final value ±1/2LSB.

9.3.12 Comparator characteristics

In the following table, data is guaranteed by design, not tested in production, unless otherwise specified.

Table 48. Comparator 1 characteristics

Symbol	Parameter	Min	Typ	Max(1)	Unit
V_{DDA}	Analog supply voltage	1.65	-	3.6	V
T_A	Temperature range	-40	-	125	°C
R_{400K}	R_{400K} value	300	400	500	kΩ
R_{10K}	R_{10K} value	7.5	10	12.5	
V_{IN}	Comparator 1 input voltage range	0.6	-	V_{DDA}	V
V_{REFINT}	Internal reference voltage(2)	1.202	1.224	1.242	
t_{START}	Comparator startup time	-	7	10	µs
t_d	Propagation delay(3)	-	3	10	
V_{offset}	Comparator offset error	-	±3	±10	mV
I_{COMP1}	Current consumption(4)	-	160	260	nA

1. Based on characterization.
2. Tested in production at V_{DD} = 3 V ±10 mV.
3. The delay is characterized for 100 mV input step with 10 mV overdrive on the inverting input, the non-inverting input set to the reference.
4. Comparator consumption only. Internal reference voltage not included.

In the following table, data is guaranteed by design, not tested in production.

Table 49. Comparator 2 characteristics

Symbol	Parameter	Conditions	Min	Typ	Max(1)	Unit
V_{DDA}	Analog supply voltage	-	1.65	-	3.6	V
T_A	Temperature range	-	-40	-	125	°C
V_{IN}	Comparator 2 input voltage range	-	0	-	V_{DDA}	V
t_{START}	Comparator startup time	Fast mode	-	15	20	µs
		Slow mode	-	20	25	
$t_{d\ slow}$	Propagation delay in slow mode(2)	1.65 V ≤V_{DDA} ≤2.7 V	-	1.8	3.5	
		2.7 V ≤V_{DDA} ≤3.6 V	-	2.5	6	
$t_{d\ fast}$	Propagation delay in fast mode(2)	1.65 V ≤V_{DDA} ≤2.7 V	-	0.8	2	
		2.7 V ≤V_{DDA} ≤3.6 V	-	1.2	4	
V_{offset}	Comparator offset error	-	-	±4	±20	mV
I_{COMP2}	Current consumption(3)	Fast mode	-	3.5	5	µA
		Slow mode	-	0.5	2	

1. Based on characterization.
2. The delay is characterized for 100 mV input step with 10 mV overdrive on the inverting input, the non-inverting input set to the reference.
3. Comparator consumption only. Internal reference voltage not included.

9.3.13 12-bit DAC characteristics

In the following table, data is guaranteed by design, not tested in production.

Table 50. DAC characteristics

Symbol	Parameter	Conditions	Min	Typ	Max	Unit
V_{DDA}	Analog supply voltage	-	1.8	-	3.6	V
V_{REF+}	Reference supply voltage	-	1.8	-	V_{DDA}	
I_{VREF}	Current consumption on V_{REF+} supply	V_{REF+} = 3.3 V, no load, middle code (0x800)	-	130	220	µA
		V_{REF+} = 3.3 V, no load, worst code (0x000)	-	220	350	
I_{VDDA}	Current consumption on V_{DDA} supply	V_{DDA} = 3.3 V, no load, middle code (0x800)	-	210	320	
		V_{DDA} = 3.3 V, no load, worst code (0x000)	-	320	520	
T_A	Temperature range	-	-40	-	125	°C
R_L	Resistive load(1) (2)	DACOUT buffer ON	5	-	-	kΩ
R_O	Output impedance	DACOUT buffer OFF	-	8	10	kΩ
C_L	Capacitive load(3)	-	-	-	50	pF
DAC_OUT	DAC_OUT voltage(4)	DACOUT buffer ON	0.2	-	V_{DDA}-0.2	V
		DACOUT buffer OFF	0	-	V_{REF+} -1 LSB	V
$t_{settling}$	Settling time (full scale: for a 12-bit input code transition between the lowest and the highest input codes when DAC_OUT reaches the final value ±1LSB)	R_L ≥5 kΩ, C_L≤ 50 pF	-	7	12	µs
Update rate	Max frequency for a correct DAC_OUT (@95%) change when small variation of the input code (from code i to i+1LSB).	R_L ≥ 5 kΩ, C_L ≤50 pF	-		1	Msps
t_{WAKEUP}	Wakeup time from OFF state. Input code between lowest and highest possible codes.	R_L ≥5 kΩ, C_L≤50 pF	-	9	15	µs
PSRR+	Power supply rejection ratio (to V_{DDA}) (static DC measurement)	R_L≥ 5 kΩ, C_L≤50 pF	-	-60	-35	dB

1. Resistive load between DACOUT and GNDA.
2. Output on PF0 (48-pin package only).
3. Capacitive load at DACOUT pin.
4. It gives the output excursion of the DAC.

In the following table, data is based on characterization results, not tested in production.

Table 51. DAC accuracy

Symbol	Parameter	Conditions	Typ	Max	Unit
DNL	Differential non linearity(1)	R_L ≥5 kΩ, C_L≤50 pF DACOUT buffer ON(2)	1.5	3	12-bit LSB
		No load DACOUT buffer OFF	1.5	3	
INL	Integral non linearity(3)	R_L ≥5 kΩ, C_L≤ 50 pF DACOUT buffer ON(2)	2	4	
		No load DACOUT buffer OFF	2	4	
Offset	Offset error(4)	R_L ≥5 kΩ, C_L≤ 50 pF DACOUT buffer ON(2)	±10	±25	
		No load DACOUT buffer OFF	±5	±8	
Offset1	Offset error at Code 1 (5)	DACOUT buffer OFF	±1.5	±5	
Gain error	Gain error(6)	R_L ≥5 kΩ, C_L≤ 50 pF DACOUT buffer ON(2)	+0.1/-0.2	+0.2/-0.5	%
		No load DACOUT buffer OFF	+0/-0.2	+0/-0.4	
TUE	Total unadjusted error	R_L ≥5 kΩ, C_L≤ 50 pF DACOUT buffer ON(2)	12	30	12-bit LSB
		No load DACOUT buffer OFF	8	12	

1. Difference between two consecutive codes - 1 LSB.
2. For 48-pin packages only. For 28-pin and 32-pin packages, DAC output buffer must be kept off and no load must be applied.
3. Difference between measured value at Code i and the value at Code i on a line drawn between Code 0 and last Code 1023.
4. Difference between the value measured at Code (0x800) and the ideal value = $V_{REF+}/2$.
5. Difference between the value measured at Code (0x001) and the ideal value.
6. Difference between the ideal slope of the transfer function and the measured slope computed from Code 0x000 and 0xFFF when buffer is ON, and from Code giving 0.2 V and (V_{DDA} -0.2) V when buffer is OFF.

In the following table, data is guaranteed by design, not tested in production.

Table 52. DAC output on PB4-PB5-PB6(1)

Symbol	Parameter	Conditions	Max	Unit
R_{int}	Internal resistance between DAC output and PB4-PB5-PB6 output	2.7 V < V_{DD} < 3.6 V	1.4	kΩ
		2.4 V < V_{DD} < 3.6 V	1.6	
		2.0 V < V_{DD} < 3.6 V	3.2	
		1.8 V < V_{DD} < 3.6 V	8.2	

1. 32 or 28-pin packages only. The DAC channel can be routed either on PB4, PB5 or PB6 using the routing interface I/O switch registers.

9.3.14 12-bit ADC1 characteristics

In the following table, data is guaranteed by design, not tested in production.

Table 53. ADC1 characteristics

Symbol	Parameter	Conditions	Min	Typ	Max	Unit
V_{DDA}	Analog supply voltage	-	1.8	-	3.6	V
V_{REF+}	Reference supply voltage	2.4 V ≤V_{DDA}≤ 3.6 V	2.4	-	V_{DDA}	V
		1.8 V ≤V_{DDA}≤ 2.4 V	V_{DDA}			V
V_{REF-}	Lower reference voltage	-	V_{SSA}			V
I_{VDDA}	Current on the VDDA input pin	-	-	1000	1450	µA
I_{VREF+}	Current on the VREF+ input pin	-	-	400	700 (peak)(1)	µA
		-	-		450 (average)(1)	µA
V_{AIN}	Conversion voltage range	-	0(2)	-	V_{REF+}	V
T_A	Temperature range	-	-40	-	125	°C
R_{AIN}	External resistance on V_{AIN}	on PF0 fast channel	-	-	50(3)	kΩ
		on all other channels	-	-		
C_{ADC}	Internal sample and hold capacitor	on PF0 fast channel	-	16	-	pF
		on all other channels	-		-	
f_{ADC}	ADC sampling clock frequency	2.4 V≤V_{DDA}≤3.6 V without zooming	0.320	-	16	MHz
		1.8 V≤V_{DDA}≤2.4 V with zooming	0.320	-	8	MHz
f_{CONV}	12-bit conversion rate	V_{AIN} on PF0 fast channel	-	-	1(4)(5)	MHz
		V_{AIN} on all other channels	-	-	760(4)(5)	kHz
f_{TRIG}	External trigger frequency	-	-	-	t_{conv}	$1/f_{ADC}$
t_{LAT}	External trigger latency	-	-	-	3.5	$1/f_{SYSCLK}$

Table 53. ADC1 characteristics (continued)

Symbol	Parameter	Conditions	Min	Typ	Max	Unit
t_S	Sampling time	V_{AIN} on PF0 fast channel V_{DDA} < 2.4 V	0.43(4)(5)	-	-	µs
		V_{AIN} on PF0 fast channel 2.4 V ≤V_{DDA}≤ 3.6 V	0.22(4)(5)	-	-	µs
		V_{AIN} on slow channels V_{DDA} < 2.4 V	0.86(4)(5)	-	-	µs
		V_{AIN} on slow channels 2.4 V ≤V_{DDA}≤ 3.6 V	0.41(4)(5)	-	-	µs
t_{conv}	12-bit conversion time	-	12 + t_S			$1/f_{ADC}$
		16 MHz	1(4)			µs
t_{WKUP}	Wakeup time from OFF state	-	-	-	3	µs
t_{IDLE}(6)	Time before a new conversion	T_A = +25 °C	-	-	1(7)	s
		T_A = +70 °C	-	-	20(7)	ms
		T_A = +125 °C	-	-	2(7)	ms
$t_{VREFINT}$	Internal reference voltage startup time	-	-	-	refer to *Table 46*	ms

1. The current consumption through V_{REF} is composed of two parameters:
   - one constant (max 300 µA)
   - one variable (max 400 µA), only during sampling time + 2 first conversion pulses.
   So, peak consumption is 300+400 = 700 µA and average consumption is 300 + [(4 sampling + 2) /16] x 400 = 450 µA at 1Msps
2. V_{REF-} or V_{DDA} must be tied to ground.
3. Guaranteed by design.
4. Minimum sampling and conversion time is reached for maximum Rext = 0.5 kΩ
5. Value obtained for continuous conversion on fast channel.
6. The time between 2 conversions, or between ADC ON and the first conversion must be lower than t_{IDLE}.
7. The t_{IDLE} maximum value is ∞on the “Z” revision code of the device.

In the following three tables, data is guaranteed by characterization result, not tested in production.

Table 54. ADC1 accuracy with V_{DDA} = 3.3 V to 2.5 V

Symbol	Parameter	Conditions	Typ	Max	Unit
DNL	Differential non linearity	f_{ADC} = 16 MHz	1	1.6	LSB
		f_{ADC} = 8 MHz	1	1.6	
		f_{ADC} = 4 MHz	1	1.5	
INL	Integral non linearity	f_{ADC} = 16 MHz	1.2	2	
		f_{ADC} = 8 MHz	1.2	1.8	
		f_{ADC} = 4 MHz	1.2	1.7	
TUE	Total unadjusted error	f_{ADC} = 16 MHz	2.2	3.0	
		f_{ADC} = 8 MHz	1.8	2.5	
		f_{ADC} = 4 MHz	1.8	2.3	
Offset	Offset error	f_{ADC} = 16 MHz	1.5	2	LSB
		f_{ADC} = 8 MHz	1	1.5	
		f_{ADC} = 4 MHz	0.7	1.2	
Gain	Gain error	f_{ADC} = 16 MHz	1	1.5	
		f_{ADC} = 8 MHz			
		f_{ADC} = 4 MHz			

Table 55. ADC1 accuracy with V_{DDA} = 2.4 V to 3.6 V

Symbol	Parameter	Typ	Max	Unit
DNL	Differential non linearity	1	2	LSB
INL	Integral non linearity	1.7	3	LSB
TUE	Total unadjusted error	2	4	LSB
Offset	Offset error	1	2	LSB
Gain	Gain error	1.5	3	LSB

Table 56. ADC1 accuracy with V_{DDA} = V_{REF}^{+} = 1.8 V to 2.4 V

Symbol	Parameter	Typ	Max	Unit
DNL	Differential non linearity	1	2	LSB
INL	Integral non linearity	2	3	LSB
TUE	Total unadjusted error	3	5	LSB
Offset	Offset error	2	3	LSB
Gain	Gain error	2	3	LSB

Figure 38. ADC1 accuracy characteristics

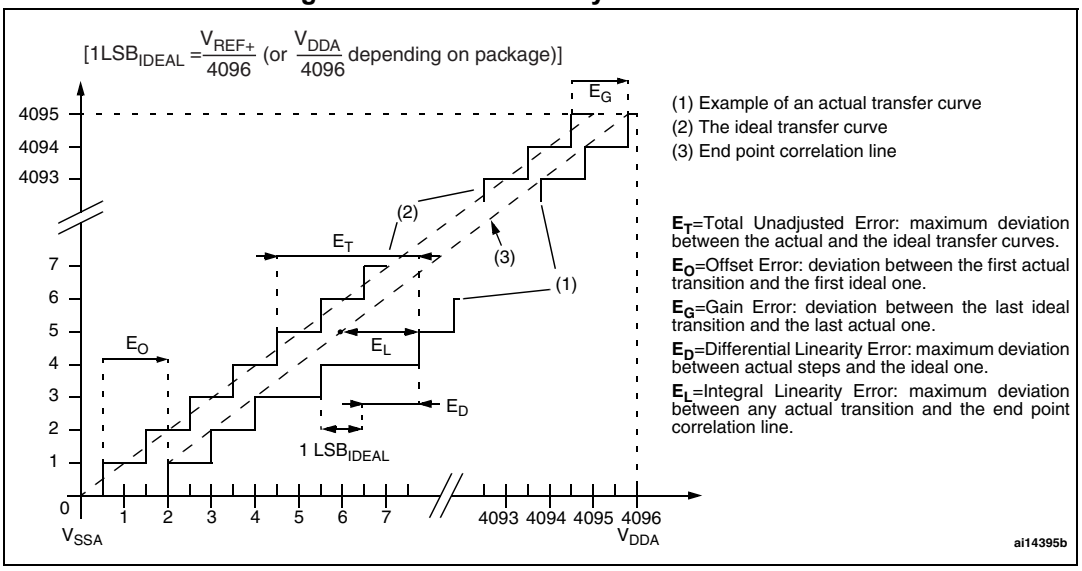

Figure 39. Typical connection diagram using the ADC

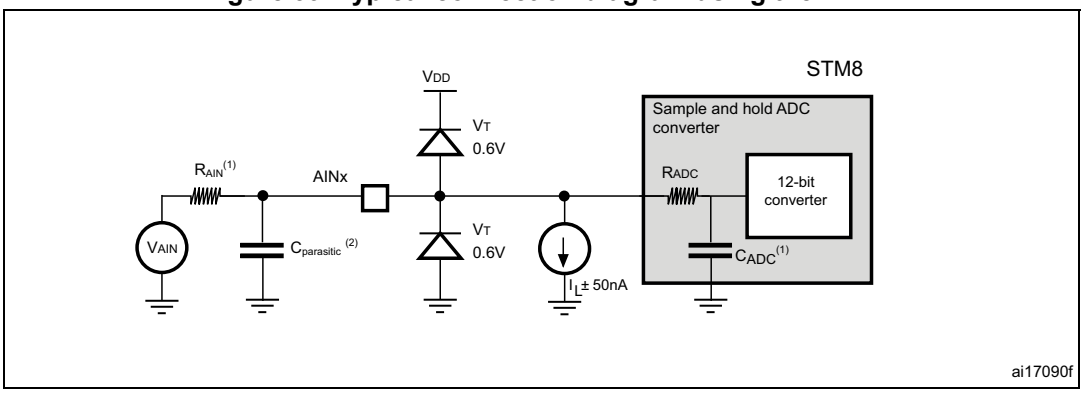

1. Refer to *Table 53* for the values of R_{AIN} and C_{ADC}.
2. $C_{parasitic}$ represents the capacitance of the PCB (dependent on soldering and PCB layout quality) plus the pad capacitance (roughly 7 pF). A high $C_{parasitic}$ value will downgrade conversion accuracy. To remedy this, f_{ADC} should be reduced.

Figure 40. Maximum dynamic current consumption on V_{REF+} supply pin during ADC conversion

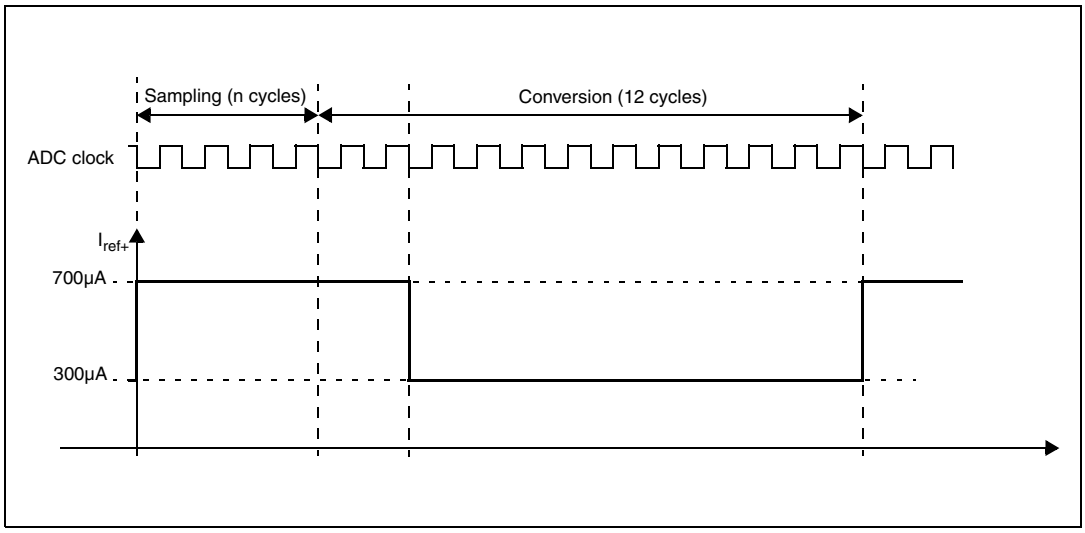

Table 57. R_{AIN} max for f_{ADC} = 16 MHz(1)

Ts (cycles)	Ts (µs)	R_{AIN} max (kohm)			
		Slow channels		Fast channels	
		2.4 V < V_{DDA} < 3.6 V	1.8 V < V_{DDA} < 2.4 V	2.4 V < V_{DDA} < 3.3 V	1.8 V < V_{DDA} < 2.4 V
4	0.25	Not allowed	Not allowed	0.7	Not allowed
9	0.5625	0.8	Not allowed	2.0	1.0
16	1	2.0	0.8	4.0	3.0
24	1.5	3.0	1.8	6.0	4.5
48	3	6.8	4.0	15.0	10.0
96	6	15.0	10.0	30.0	20.0
192	12	32.0	25.0	50.0	40.0
384	24	50.0	50.0	50.0	50.0

1. Guaranteed by design.

General PCB design guidelines

Power supply decoupling should be performed as shown in *Figure 41* or *Figure 42*, depending on whether V_{REF+} is connected to V_{DDA} or not. Good quality ceramic 10 nF capacitors should be used. They should be placed as close as possible to the chip.

Figure 41. Power supply and reference decoupling (V_{REF+} not connected to V_{DDA})

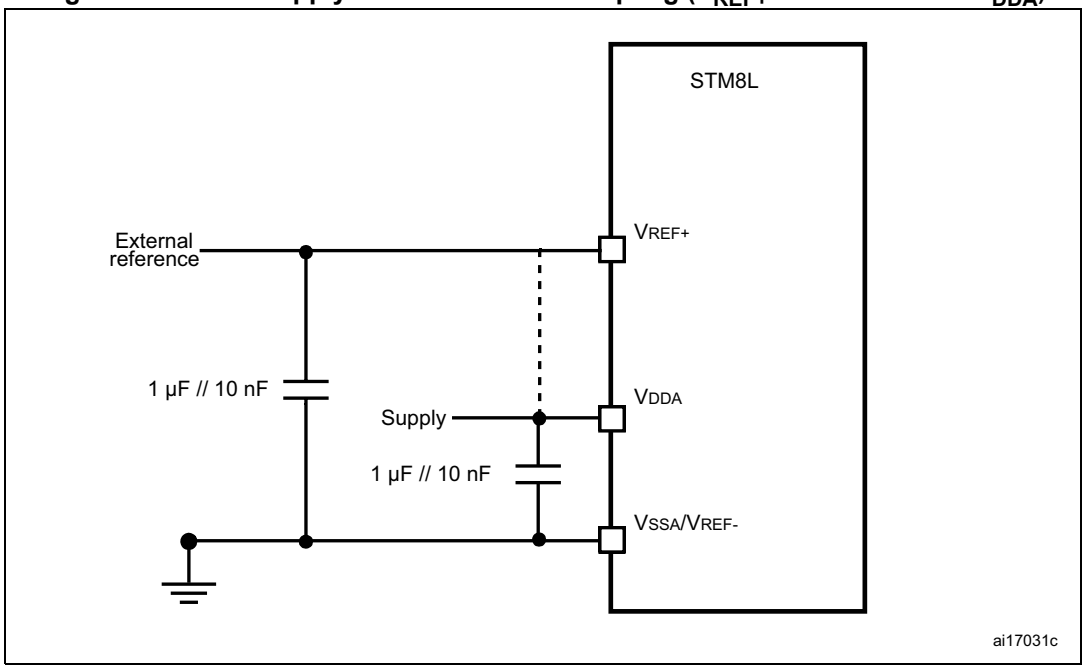

Figure 42. Power supply and reference decoupling (V_{REF+} connected to V_{DDA})

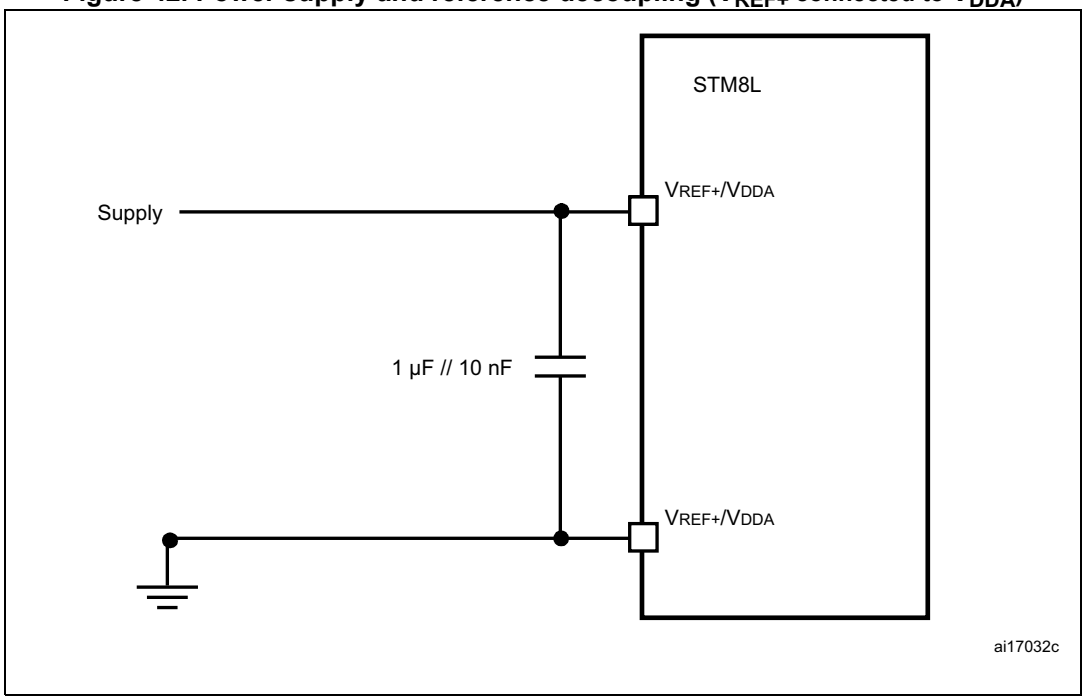

9.3.15 EMC characteristics

Susceptibility tests are performed on a sample basis during product characterization.

Functional EMS (electromagnetic susceptibility)

Based on a simple running application on the product (toggling 2 LEDs through I/O ports), the product is stressed by two electromagnetic events until a failure occurs (indicated by the LEDs).

- **ESD**: Electrostatic discharge (positive and negative) is applied on all pins of the device until a functional disturbance occurs. This test conforms with the IEC 61000 standard.
- **FTB**: A burst of fast transient voltage (positive and negative) is applied to V_{DD} and V_{SS} through a 100 pF capacitor, until a functional disturbance occurs. This test conforms with the IEC 61000 standard.

A device reset allows normal operations to be resumed. The test results are given in the table below based on the EMS levels and classes defined in application note AN1709.

Designing hardened software to avoid noise problems

EMC characterization and optimization are performed at component level with a typical application environment and simplified MCU software. It should be noted that good EMC performance is highly dependent on the user application and the software in particular.

Therefore it is recommended that the user applies EMC software optimization and prequalification tests in relation with the EMC level requested for his application.

Prequalification trials

Most of the common failures (unexpected reset and program counter corruption) can be reproduced by manually forcing a low state on the NRST pin or the Oscillator pins for 1 second.

To complete these trials, ESD stress can be applied directly on the device, over the range of specification values. When unexpected behavior is detected, the software can be hardened to prevent unrecoverable errors occurring (see application note AN1015).

Table 58. EMS data

Symbol	Parameter	Conditions		Level/ Class
V_{FESD}	Voltage limits to be applied on any I/O pin to induce a functional disturbance	V_{DD} = 3.3 V, T_A = +25 °C, f_{CPU}= 16 MHz, conforms to IEC 61000		3B
V_{EFTB}	Fast transient voltage burst limits to be applied through 100 pF on V_{DD} and V_{SS} pins to induce a functional disturbance	V_{DD} = 3.3 V, T_A = +25 °C, f_{CPU} = 16 MHz, conforms to IEC 61000	Using HSI	4A
			Using HSE	2B

Electromagnetic interference (EMI)

Based on a simple application running on the product (toggling 2 LEDs through the I/O ports), the product is monitored in terms of emission. This emission test is in line with the norm IEC61967-2 which specifies the board and the loading of each pin.

Table 59. EMI data (1)

Symbol	Parameter	Conditions	Monitored frequency band	Max vs. 16 MHz	Unit
S_{EMI}	Peak level	V_{DD} = 3.6 V, T_A = +25 °C, LQFP32 conforming to IEC61967-2	0.1 MHz to 30 MHz	-3	dBµV
			30 MHz to 130 MHz	9	
			130 MHz to 1 GHz	4	
			SAE EMI Level	2	-

1. Not tested in production.

Absolute maximum ratings (electrical sensitivity)

Based on two different tests (ESD and LU) using specific measurement methods, the product is stressed in order to determine its performance in terms of electrical sensitivity. For more details, refer to the application note AN1181.

Electrostatic discharge (ESD)

Electrostatic discharges (a positive then a negative pulse separated by 1 second) are applied to the pins of each sample according to each pin combination. The sample size depends on the number of supply pins in the device (3 parts*(n+1) supply pin). Two models can be simulated: human body model and charge device model. This test conforms to the JESD22-A114A/A115A standard.

Table 60. ESD absolute maximum ratings

Symbol	Ratings	Conditions	Maximum value (1)	Unit
$V_{ESD(HBM)}$	Electrostatic discharge voltage (human body model)	T_A = +25 °C	2000	V
$V_{ESD(CDM)}$	Electrostatic discharge voltage (charge device model)		500	

1. Data based on characterization results.

Static latch-up

- **LU**: 3 complementary static tests are required on 6 parts to assess the latch-up performance. A supply overvoltage (applied to each power supply pin) and a current injection (applied to each input, output and configurable I/O pin) are performed on each sample. This test conforms to the EIA/JESD 78 IC latch-up standard. For more details, refer to the application note AN1181.

Table 61. Electrical sensitivities

Symbol	Parameter	Class
LU	Static latch-up class	II

10 Package information

10.1 ECOPACK

In order to meet environmental requirements, ST offers these devices in different grades of ECOPACK® packages, depending on their level of environmental compliance. ECOPACK® specifications, grade definitions and product status are available at: *www.st.com*. ECOPACK® is an ST trademark.

10.2 LQFP48 package information

Figure 43. LQFP48 - 48-pin, 7 x 7 mm low-profile quad flat package outline

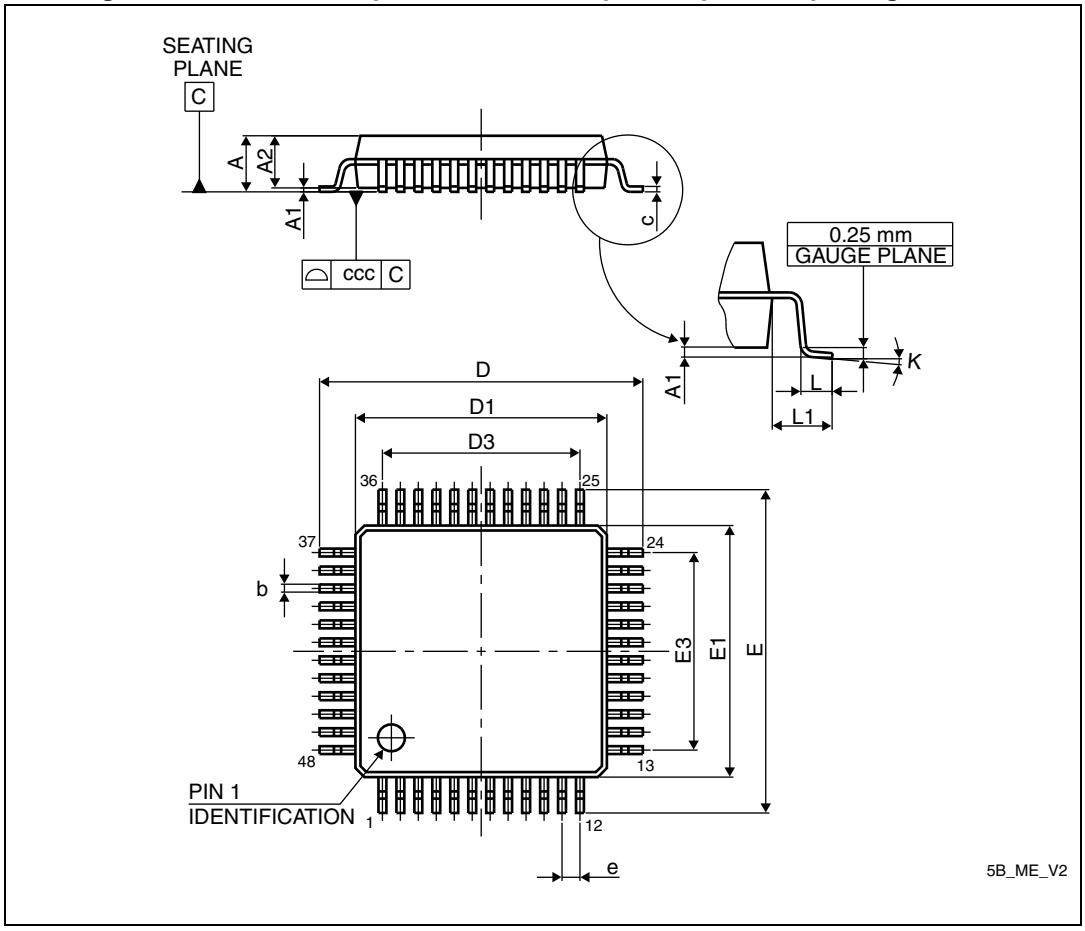

1. Drawing is not to scale.

Table 62. LQFP48 - 48-pin, 7 x 7 mm low-profile quad flat package mechanical data

Symbol	millimeters			inches[1]		
	Min	Typ	Max	Min	Typ	Max
A	-	-	1.600	-	-	0.0630
A1	0.050	-	0.150	0.0020	-	0.0059
A2	1.350	1.400	1.450	0.0531	0.0551	0.0571
b	0.170	0.220	0.270	0.0067	0.0087	0.0106
c	0.090	-	0.200	0.0035	-	0.0079
D	8.800	9.000	9.200	0.3465	0.3543	0.3622
D1	6.800	7.000	7.200	0.2677	0.2756	0.2835
D3	-	5.500	-	-	0.2165	-
E	8.800	9.000	9.200	0.3465	0.3543	0.3622
E1	6.800	7.000	7.200	0.2677	0.2756	0.2835
E3	-	5.500	-	-	0.2165	-
e	-	0.500	-	-	0.0197	-
L	0.450	0.600	0.750	0.0177	0.0236	0.0295
L1	-	1.000	-	-	0.0394	-
k	0°	3.5°	7°	0°	3.5°	7°
ccc	-	-	0.080	-	-	0.0031

1. Values in inches are converted from mm and rounded to 4 decimal digits.

Figure 44. LQFP48 - 48-pin, 7 x 7 mm low-profile quad flat package recommended footprint

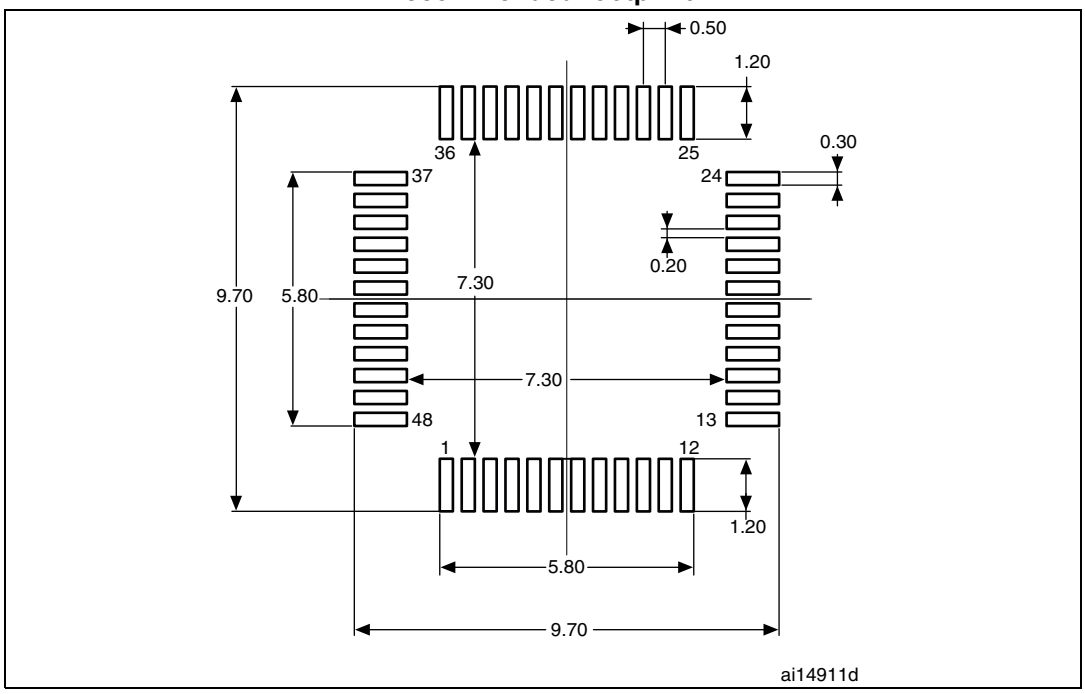

1. Dimensions are expressed in millimeters.

Device marking

The following figure gives an example of topside marking orientation versus pin 1 identifier location. Other optional marking or inset/upset marks, which depend on supply chain operations, are not indicated below.

Figure 45. LQFP48 marking example (package top view)

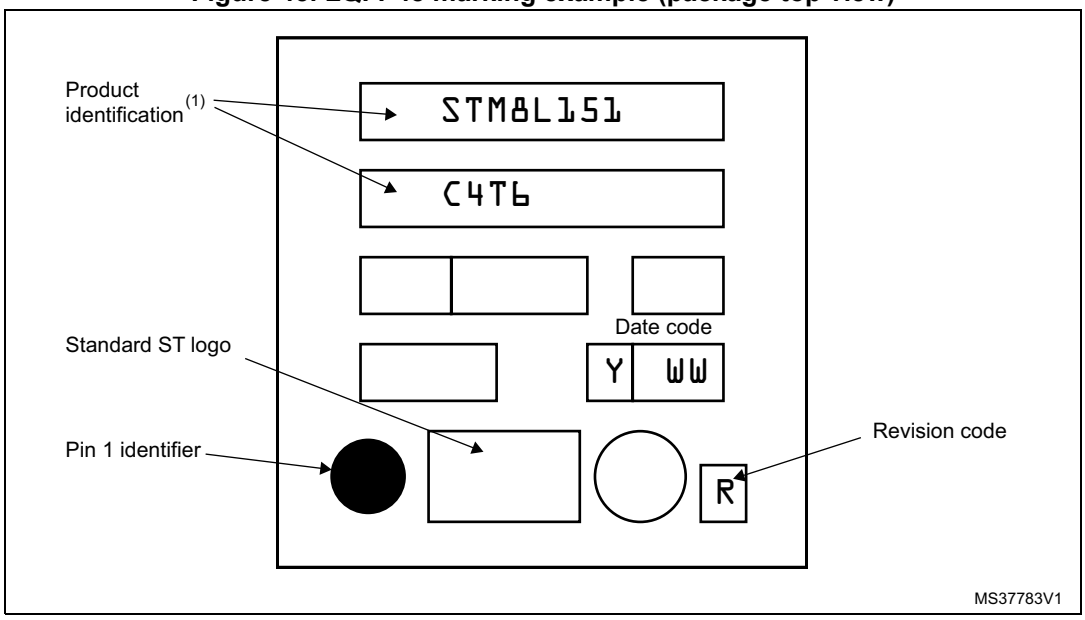

1. Parts marked as “ES”, “E” or accompanied by an Engineering Sample notification letter, are not yet qualified and therefore not yet ready to be used in production and any consequences deriving from such usage will not be at ST charge. In no event, ST will be liable for any customer usage of these engineering samples in production. ST Quality has to be contacted prior to any decision to use these Engineering Samples to run qualification activity.

10.3 UFQFPN48 package information

Figure 46. UFQFPN48 - 48-lead, 7 x 7 mm, 0.5 mm pitch, ultra thin fine pitch quad flat package outline

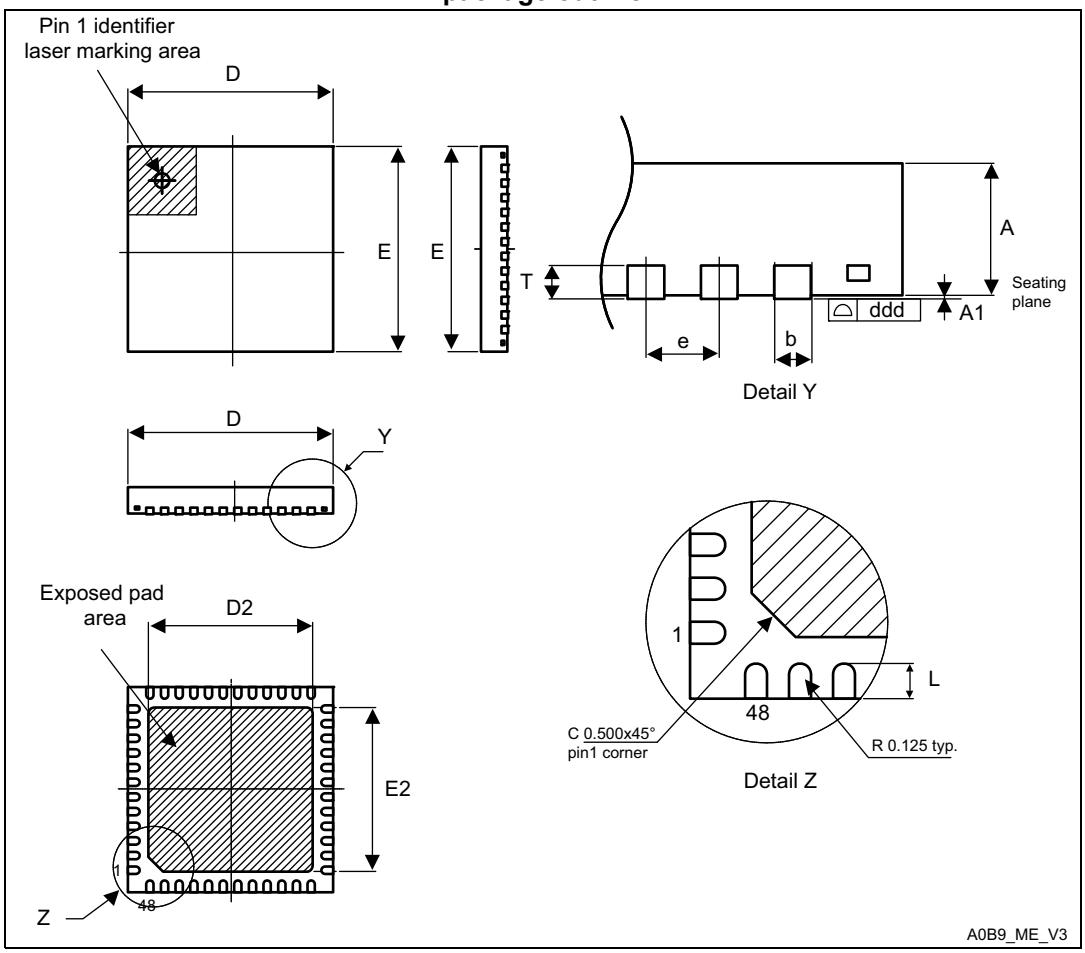

1. Drawing is not to scale.
2. All leads/pads should also be soldered to the PCB to improve the lead/pad solder joint life.
3. There is an exposed die pad on the underside of the UFQFPN package. It is recommended to connect and solder this back-side pad to PCB ground.

Table 63. UFQFPN48 - 48-lead, 7 x 7 mm, 0.5 mm pitch, ultra thin fine pitch quad flat package mechanical data

Symbol	millimeters			inches(1)		
	Min	Typ	Max	Min	Typ	Max
A	0.500	0.550	0.600	0.0197	0.0217	0.0236
A1	0.000	0.020	0.050	0.0000	0.0008	0.0020
D	6.900	7.000	7.100	0.2717	0.2756	0.2795
E	6.900	7.000	7.100	0.2717	0.2756	0.2795
D2	5.500	5.600	5.700	0.2165	0.2205	0.2244
E2	5.500	5.600	5.700	0.2165	0.2205	0.2244
L	0.300	0.400	0.500	0.0118	0.0157	0.0197
T	-	0.152	-	-	0.0060	-
b	0.200	0.250	0.300	0.0079	0.0098	0.0118
e	-	0.500	-	-	0.0197	-
ddd	-	-	0.080	-	-	0.0031

1. Values in inches are converted from mm and rounded to 4 decimal digits.

Figure 47. UFQFPN48 - 48-lead, 7 x 7 mm, 0.5 mm pitch, ultra thin fine pitch quad flat package recommended footprint

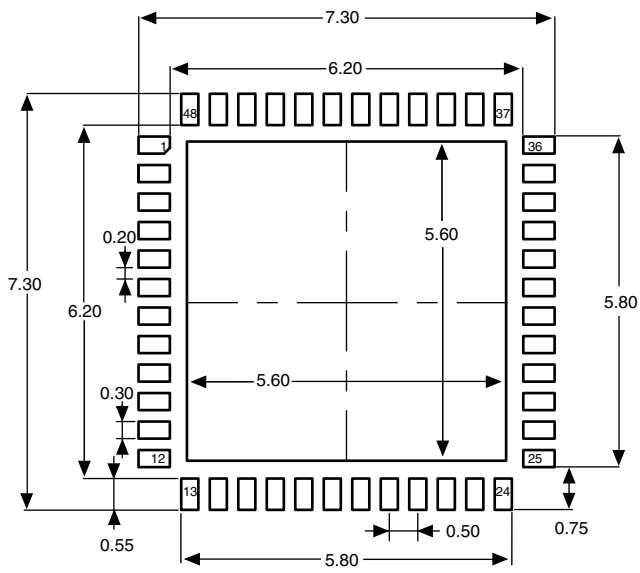

1. Dimensions are expressed in millimeters.

Device marking

The following figure gives an example of topside marking orientation versus pin 1 identifier location. Other optional marking or inset/upset marks, which depend on supply chain operations, are not indicated below.

Figure 48. UFQFPN48 marking example (package top view)

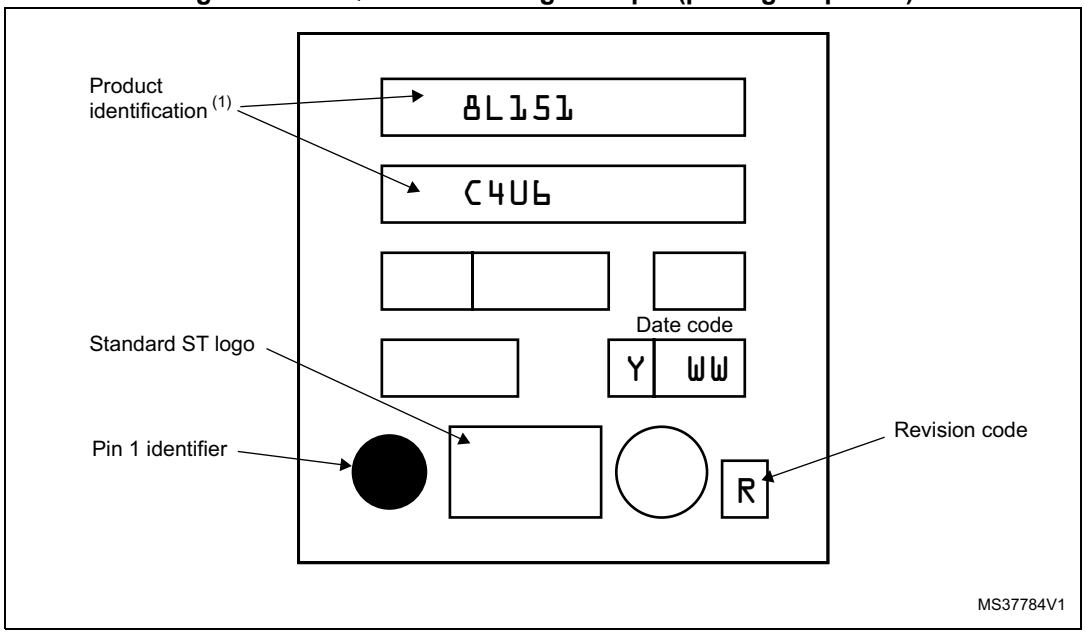

1. Parts marked as “ES”, “E” or accompanied by an Engineering Sample notification letter, are not yet qualified and therefore not yet ready to be used in production and any consequences deriving from such usage will not be at ST charge. In no event, ST will be liable for any customer usage of these engineering samples in production. ST Quality has to be contacted prior to any decision to use these Engineering Samples to run qualification activity.

10.4 LQFP32 package information

Figure 49. LQFP32 - 32-pin, 7 x 7 mm low-profile quad flat package outline

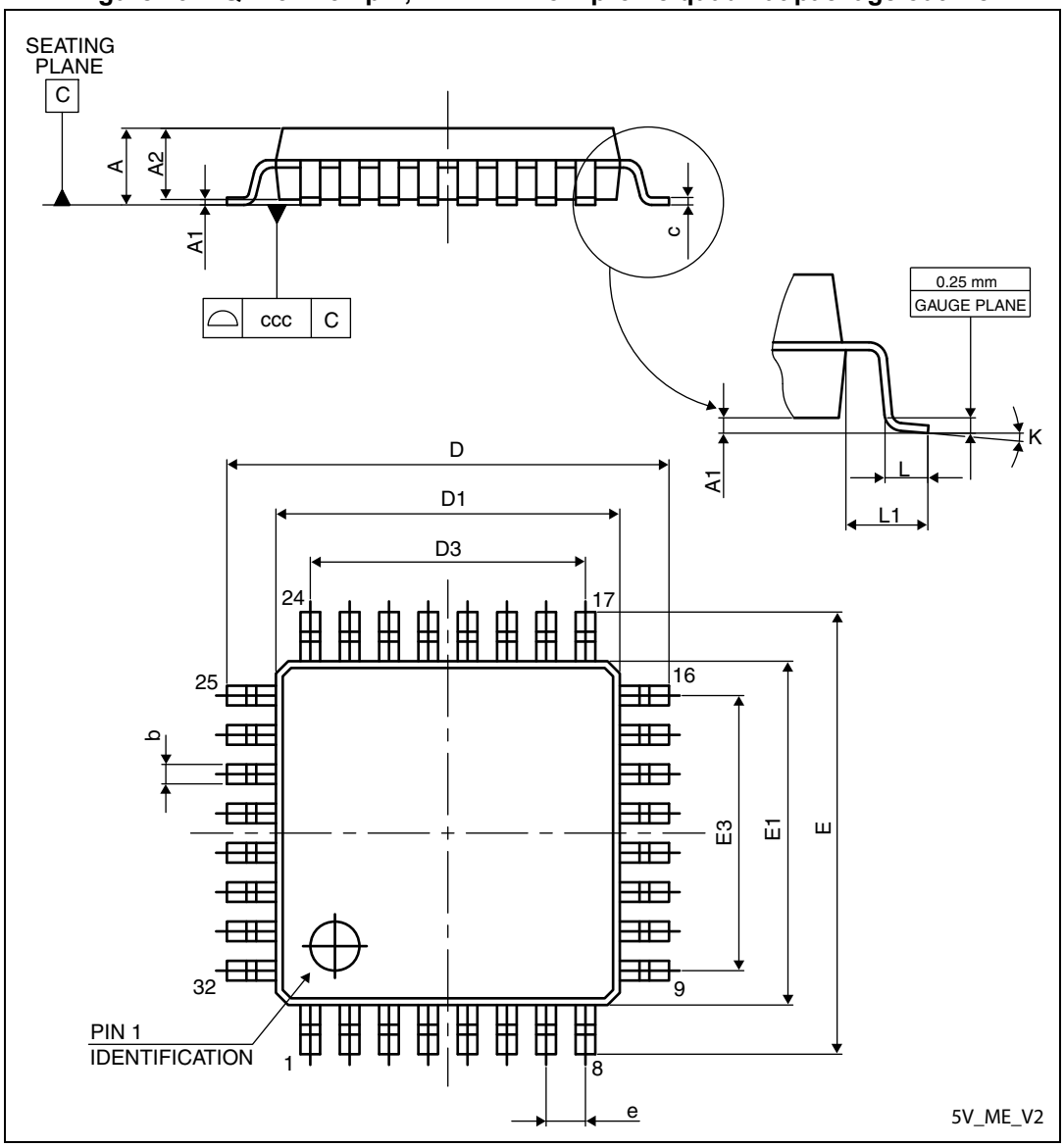

1. Drawing is not to scale.

Table 64. LQFP32 - 32-pin, 7 x 7 mm low-profile quad flat package mechanical data

Symbol	millimeters			inches[1]		
	Min	Typ	Max	Min	Typ	Max
A	-	-	1.600	-	-	0.0630
A1	0.050	-	0.150	0.0020	-	0.0059
A2	1.350	1.400	1.450	0.0531	0.0551	0.0571
b	0.300	0.370	0.450	0.0118	0.0146	0.0177
c	0.090	-	0.200	0.0035	-	0.0079
D	8.800	9.000	9.200	0.3465	0.3543	0.3622
D1	6.800	7.000	7.200	0.2677	0.2756	0.2835
D3	-	5.600	-	-	0.2205	-
E	8.800	9.000	9.200	0.3465	0.3543	0.3622
E1	6.800	7.000	7.200	0.2677	0.2756	0.2835
E3	-	5.600	-	-	0.2205	-
e	-	0.800	-	-	0.0315	-
L	0.450	0.600	0.750	0.0177	0.0236	0.0295
L1	-	1.000	-	-	0.0394	-
k	0°	3.5°	7°	0°	3.5°	7°
ccc	-	-	0.100	-	-	0.0039

1. Values in inches are converted from mm and rounded to 4 decimal digits.

Figure 50. LQFP32 - 32-pin, 7 x 7 mm low-profile quad flat package recommended footprint

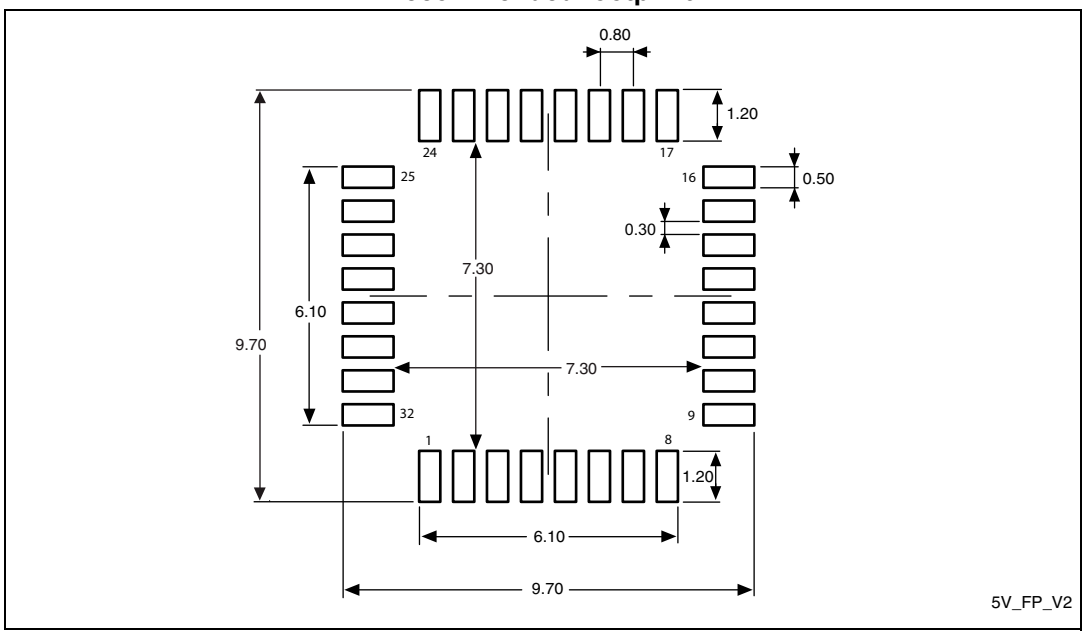

1. Dimensions are expressed in millimeters.

Device marking

The following figure gives an example of topside marking orientation versus pin 1 identifier location. Other optional marking or inset/upset marks, which depend on supply chain operations, are not indicated below.

Figure 51. LQFP32 marking example (package top view)

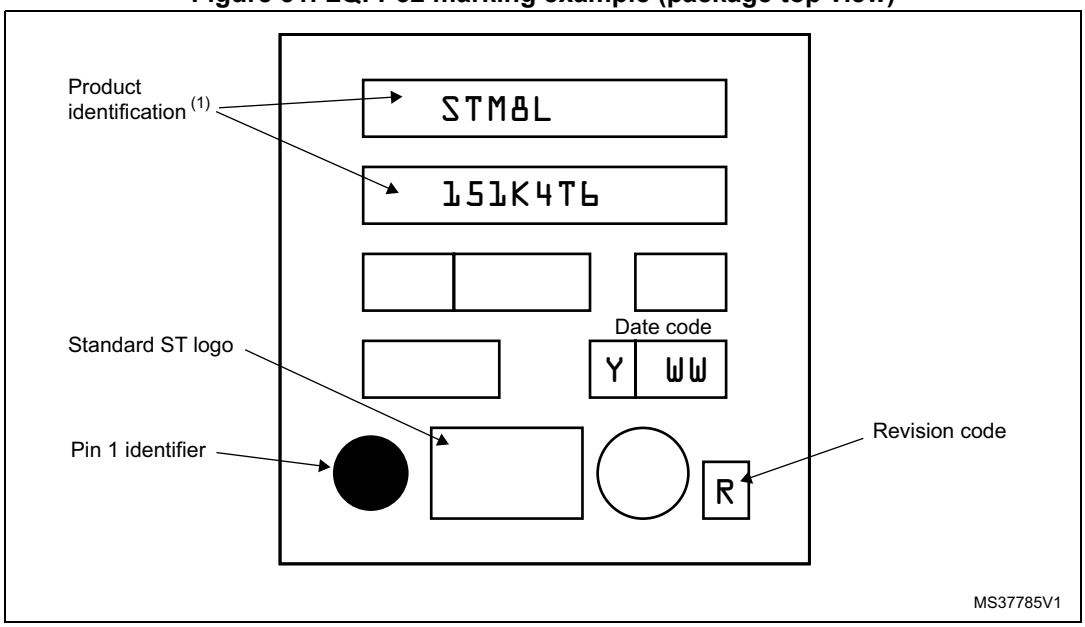

1. Parts marked as “ES”, “E” or accompanied by an Engineering Sample notification letter, are not yet qualified and therefore not yet ready to be used in production and any consequences deriving from such usage will not be at ST charge. In no event, ST will be liable for any customer usage of these engineering samples in production. ST Quality has to be contacted prior to any decision to use these Engineering

Samples to run qualification activity.

10.5 UFQFPN32 package information

Figure 52. UFQFPN32 - 32-pin, 5 x 5 mm, 0.5 mm pitch ultra thin fine pitch quad flat package outline

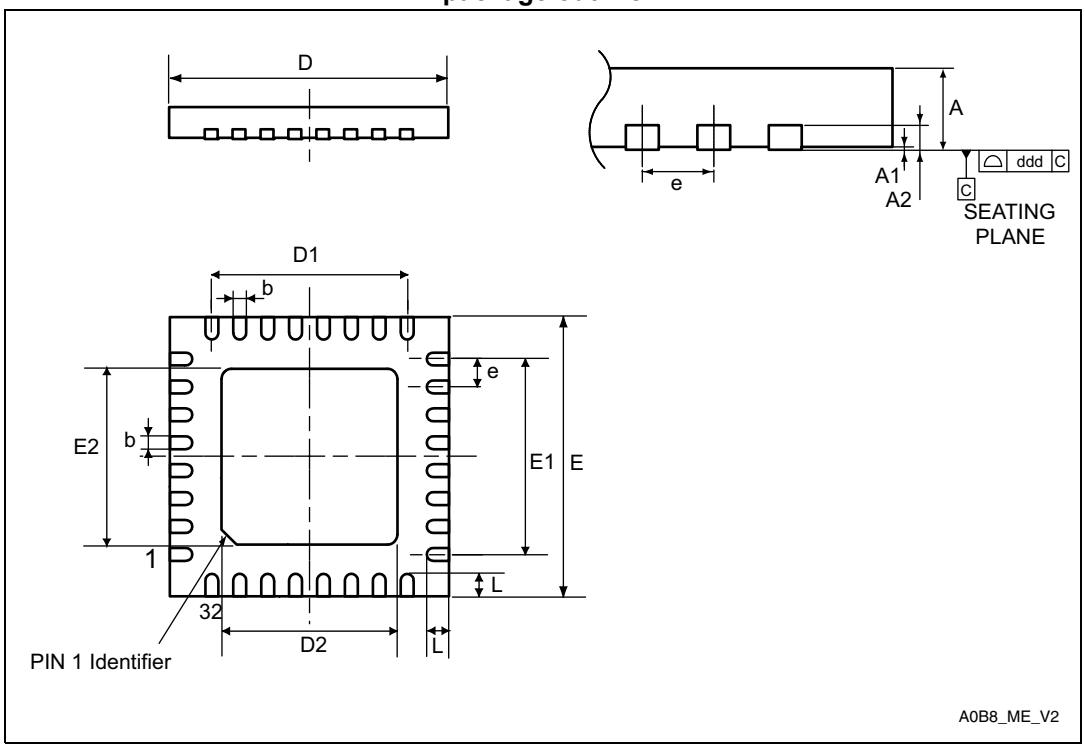

1. Drawing is not to scale.

Table 65. UFQFPN32 - 32-pin, 5 x 5 mm, 0.5 mm pitch ultra thin fine pitch quad flat package mechanical data

Symbol	millimeters			inches[1]		
	Min	Typ	Max	Min	Typ	Max
A	0.500	0.550	0.600	0.0197	0.0217	0.0236
A1	0.000	0.020	0.050	0.0000	0.0008	0.0020
A3	-	0.152	-	-	0.0060	-
b	0.180	0.230	0.280	0.0071	0.0091	0.0110
D	4.900	5.000	5.100	0.1929	0.1969	0.2008
D1	3.400	3.500	3.600	0.1339	0.1378	0.1417
D2	3.400	3.500	3.600	0.1339	0.1378	0.1417
E	4.900	5.000	5.100	0.1929	0.1969	0.2008
E1	3.400	3.500	3.600	0.1339	0.1378	0.1417
E2	3.400	3.500	3.600	0.1339	0.1378	0.1417
e	-	0.500	-	-	0.0197	-
L	0.300	0.400	0.500	0.0118	0.0157	0.0197
ddd	-	-	0.080	-	-	0.0031

1. Values in inches are converted from mm and rounded to 4 decimal digits.

Figure 53. UFQFPN32 - 32-pin, 5 x 5 mm, 0.5 mm pitch ultra thin fine pitch quad flat package recommended footprint

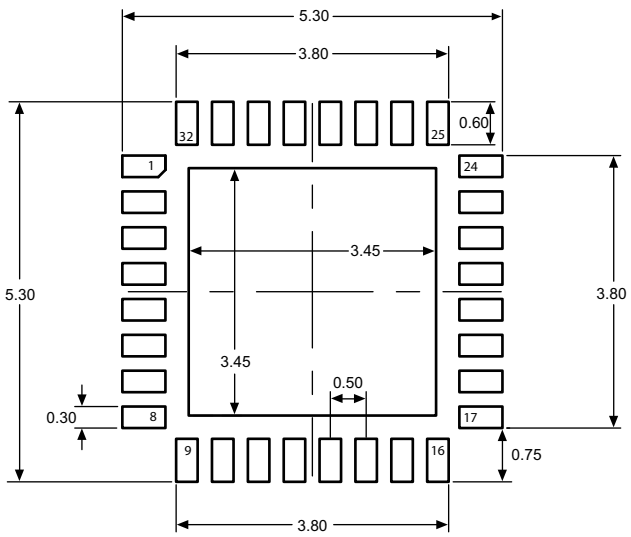

1. Dimensions are expressed in millimeters.

Device marking

The following figure gives an example of topside marking orientation versus pin 1 identifier location. Other optional marking or inset/upset marks, which depend on supply chain operations, are not indicated below.

Figure 54. UFQFPN32 marking example (package top view)

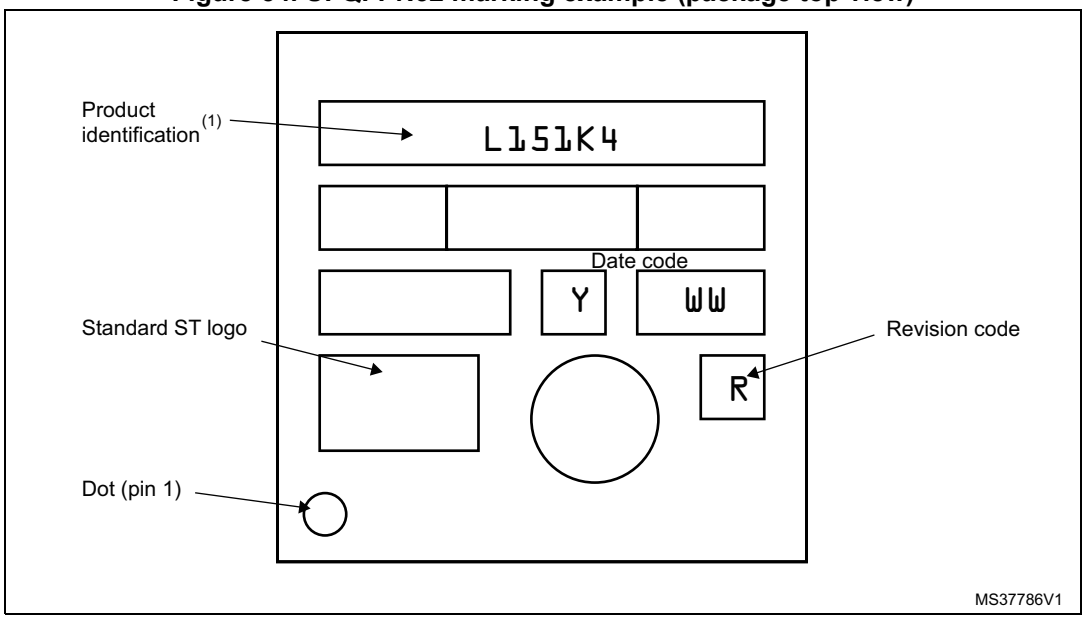

1. Parts marked as “ES”, “E” or accompanied by an Engineering Sample notification letter, are not yet qualified and therefore not yet ready to be used in production and any consequences deriving from such usage will not be at ST charge. In no event, ST will be liable for any customer usage of these engineering samples in production. ST Quality has to be contacted prior to any decision to use these Engineering Samples to run qualification activity.

10.6 UFQFPN28 package information

Figure 55. UFQFPN28 - 28-lead, 4 x 4 mm, 0.5 mm pitch, ultra thin fine pitch quad flat package outline

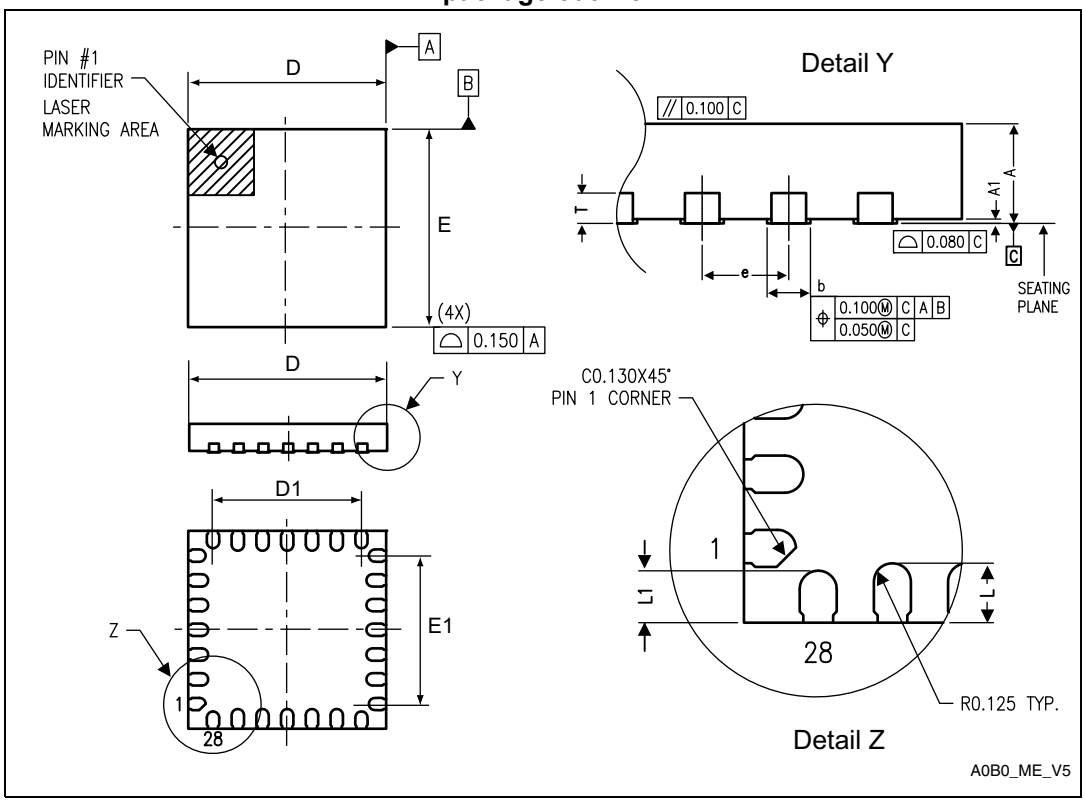

1. Drawing is not to scale.

Table 66. UFQFPN28 - 28-lead, 4 x 4 mm, 0.5 mm pitch, ultra thin fine pitch quad flat package mechanical data(1)

Symbol	millimeters			inches		
	Min	Typ	Max	Min	Typ	Max
A	0.500	0.550	0.600	0.0197	0.0217	0.0236
A1	-	0.000	0.050	-	0.0000	0.0020
D	3.900	4.000	4.100	0.1535	0.1575	0.1614
D1	2.900	3.000	3.100	0.1142	0.1181	0.1220
E	3.900	4.000	4.100	0.1535	0.1575	0.1614
E1	2.900	3.000	3.100	0.1142	0.1181	0.1220
L	0.300	0.400	0.500	0.0118	0.0157	0.0197
L1	0.250	0.350	0.450	0.0098	0.0138	0.0177
T	-	0.152	-	-	0.0060	-
b	0.200	0.250	0.300	0.0079	0.0098	0.0118
e	-	0.500	-	-	0.0197	-

1. Values in inches are converted from mm and rounded to 4 decimal digits.

Figure 56. UFQFPN28 - 28-lead, 4 x 4 mm, 0.5 mm pitch, ultra thin fine pitch quad flat package recommended footprint

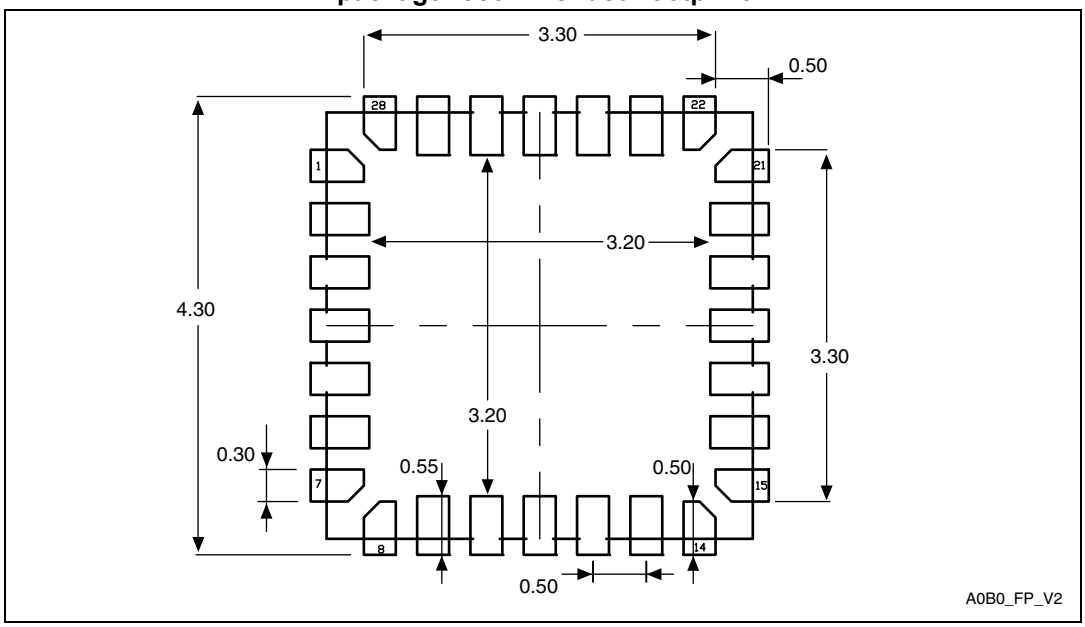

1. Dimensions are expressed in millimeters.

Device marking

The following figure gives an example of topside marking orientation versus pin 1 identifier location. Other optional marking or inset/upset marks, which depend on supply chain operations, are not indicated below.

Figure 57. UFQFPN28 marking example (package top view)

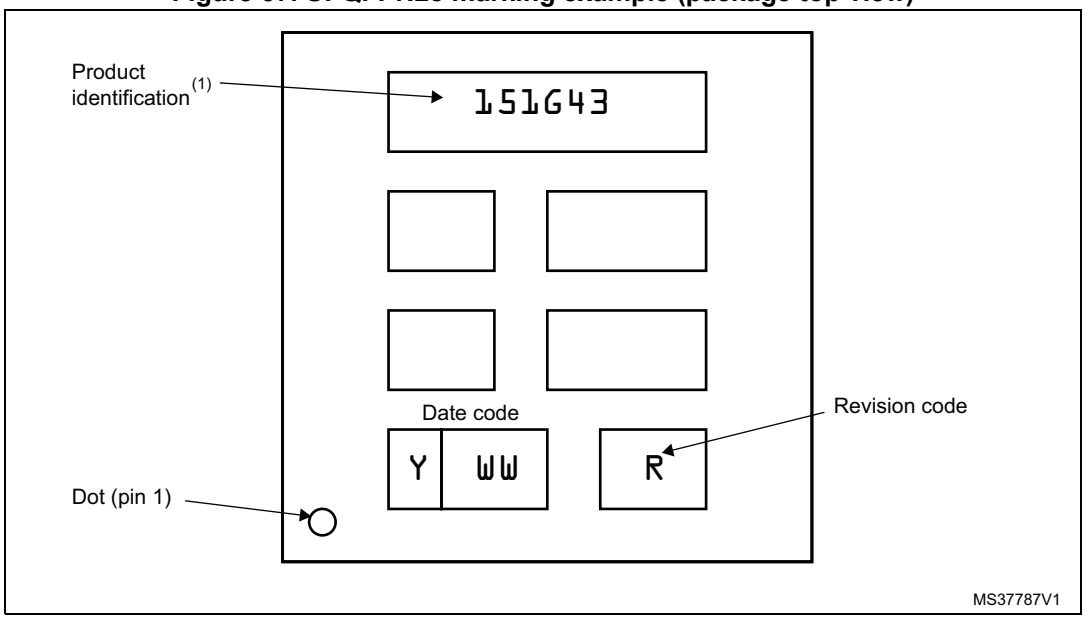

1. Parts marked as “ES”, “E” or accompanied by an Engineering Sample notification letter, are not yet qualified and therefore not yet ready to be used in production and any consequences deriving from such usage will not be at ST charge. In no event, ST will be liable for any customer usage of these engineering samples in production. ST Quality has to be contacted prior to any decision to use these Engineering Samples to run qualification activity.

10.7 WLCSP28 package information

Figure 58. WLCSP28 - 28-pin, 1.703 x 2.841 mm, 0.4 mm pitch wafer level chip scale package outline

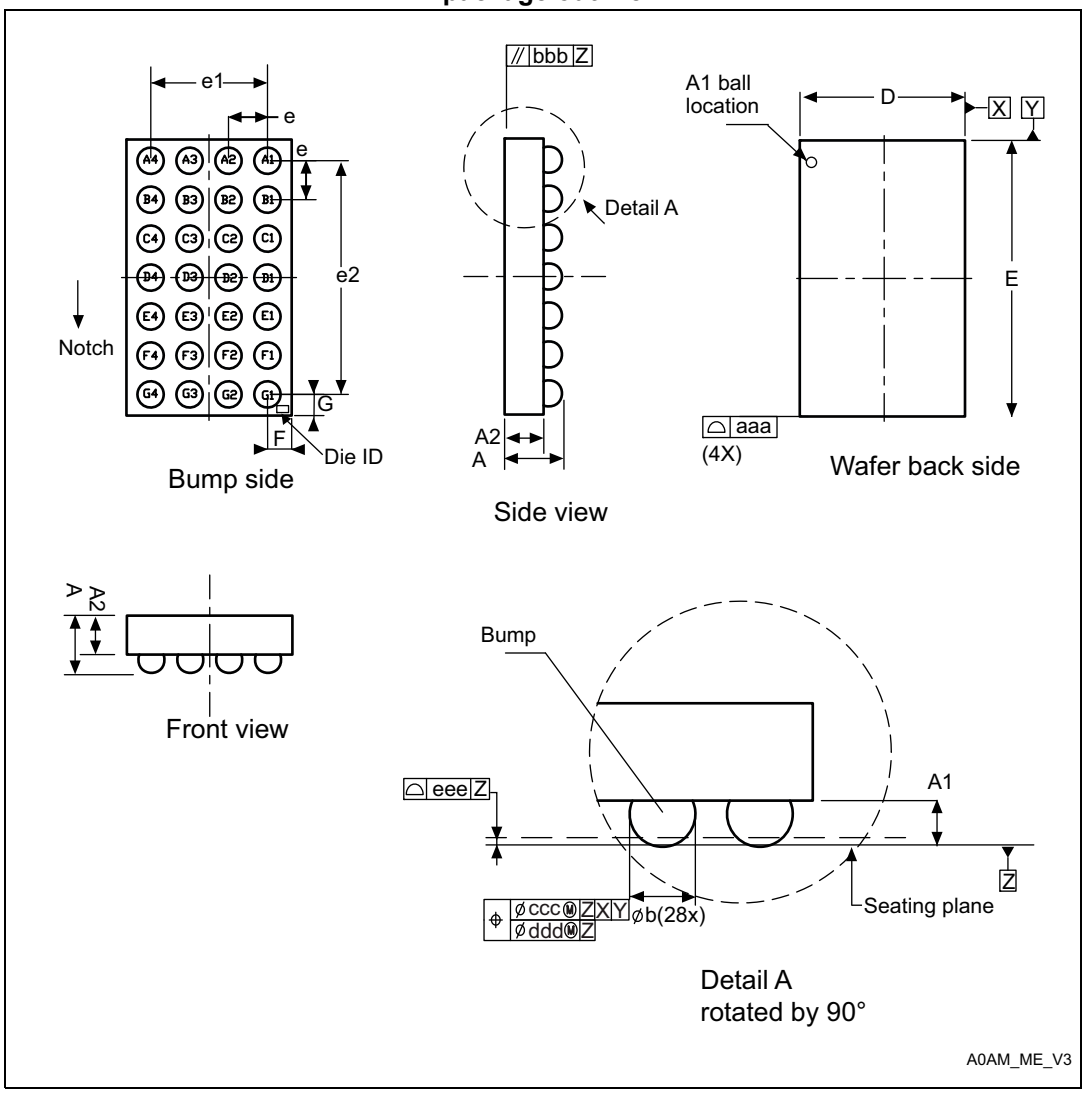

1. Drawing is not to scale.

Table 67. WLCSP28 - 28-pin, 1.703 x 2.841 mm, 0.4 mm pitch wafer level chip scale package mechanical data

Symbol	millimeters			inches[1]		
	Min	Typ	Max	Min	Typ	Max
A	0.540	0.570	0.600	0.0213	0.0224	0.0236
A1	-	0.190	-	-	0.0075	-
A2	-	0.380	-	-	0.0150	-
b[2]	0.240	0.270	0.300	0.0094	0.0106	0.0118
D	1.668	1.703	1.738	0.0657	0.0670	0.0684
E	2.806	2.841	2.876	0.1105	0.1119	0.1132
e	-	0.400	-	-	0.0157	-
e1	-	1.200	-	-	0.0472	-
e2	-	2.400	-	-	0.0945	-
F	-	0.251	-	-	0.0099	-
G	-	0.222	-	-	0.0087	-
aaa	-	-	0.100	-	-	0.0039
bbb	-	-	0.100	-	-	0.0039
ccc	-	-	0.100	-	-	0.0039
ddd	-	-	0.050	-	-	0.0020
eee	-	-	0.050	-	-	0.0020

1. Values in inches are converted from mm and rounded to 4 decimal digits.
2. Dimension is measured at the maximum bump diameter parallel to primary datum Z.

Device marking

The following figure gives an example of topside marking orientation versus ball A1 identifier location. Other optional marking or inset/upset marks, which depend on supply chain operations, are not indicated below.

Figure 59. WLCSP28 marking example (package top view)

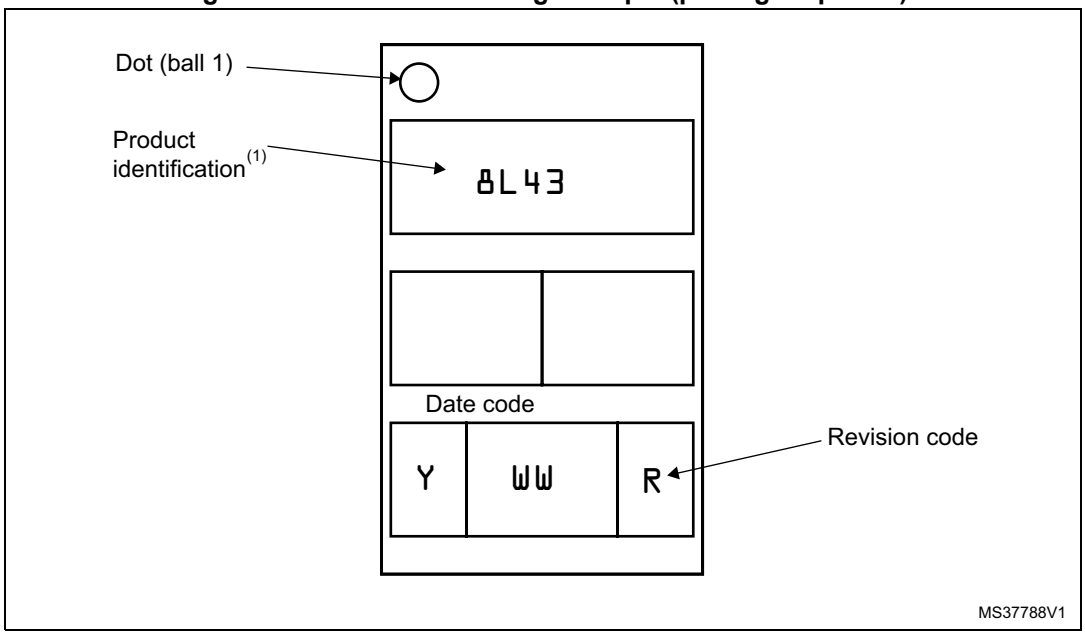

1. Parts marked as “ES”, “E” or accompanied by an Engineering Sample notification letter, are not yet qualified and therefore not yet ready to be used in production and any consequences deriving from such usage will not be at ST charge. In no event, ST will be liable for any customer usage of these engineering samples in production. ST Quality has to be contacted prior to any decision to use these Engineering Samples to run qualification activity.

10.8 Thermal characteristics

The maximum chip junction temperature (T_{Jmax}) must never exceed the values given in *Table 18: General operating conditions on page 66*.

The maximum chip-junction temperature, T_{Jmax}, in degree Celsius, may be calculated using the following equation:

$$T_{Jmax} = T_{Amax} + (P_{Dmax} \times \Theta_{JA})$$

Where:

- T_{Amax} is the maximum ambient temperature in °C
- Θ_{JA} is the package junction-to-ambient thermal resistance in °C/W
- P_{Dmax} is the sum of P_{INTmax} and $P_{I/Omax}$ ($P_{Dmax} = P_{INTmax} + P_{I/Omax}$)
- P_{INTmax} is the product of I_{DD} and V_{DD}, expressed in Watts. This is the maximum chip internal power.
- $P_{I/Omax}$ represents the maximum power dissipation on output pins
  Where:
  $P_{I/Omax} = \Sigma (V_{OL}*I_{OL}) + \Sigma((V_{DD}-V_{OH})*I_{OH})$,
  taking into account the actual V_{OL}/I_{OL} and V_{OH}/I_{OH} of the I/Os at low and high level in the application.

Table 68. Thermal characteristics(1)

Symbol	Parameter	Value	Unit
Θ_{JA}	Thermal resistance junction-ambient LQFP 48- 7 x 7 mm	65	°C/W
Θ_{JA}	Thermal resistance junction-ambient UFQFPN 48- 7 x 7mm	32	°C/W
Θ_{JA}	Thermal resistance junction-ambient LQFP 32 - 7 x 7 mm	59	°C/W
Θ_{JA}	Thermal resistance junction-ambient UFQFPN 32 - 5 x 5 mm	38	°C/W
Θ_{JA}	Thermal resistance junction-ambient UFQFPN28 - 4 x 4 mm	118	°C/W
Θ_{JA}	Thermal resistance junction-ambient WLCSP28	70	°C/W

1. Thermal resistances are based on JEDEC JESD51-2 with 4-layer PCB in a natural convection environment.

11 Part numbering

For a list of available options (memory, package, and so on) or for further information on any aspect of this device, please contact your nearest ST sales office.

Figure 60. Medium-density STM8L15x ordering information scheme

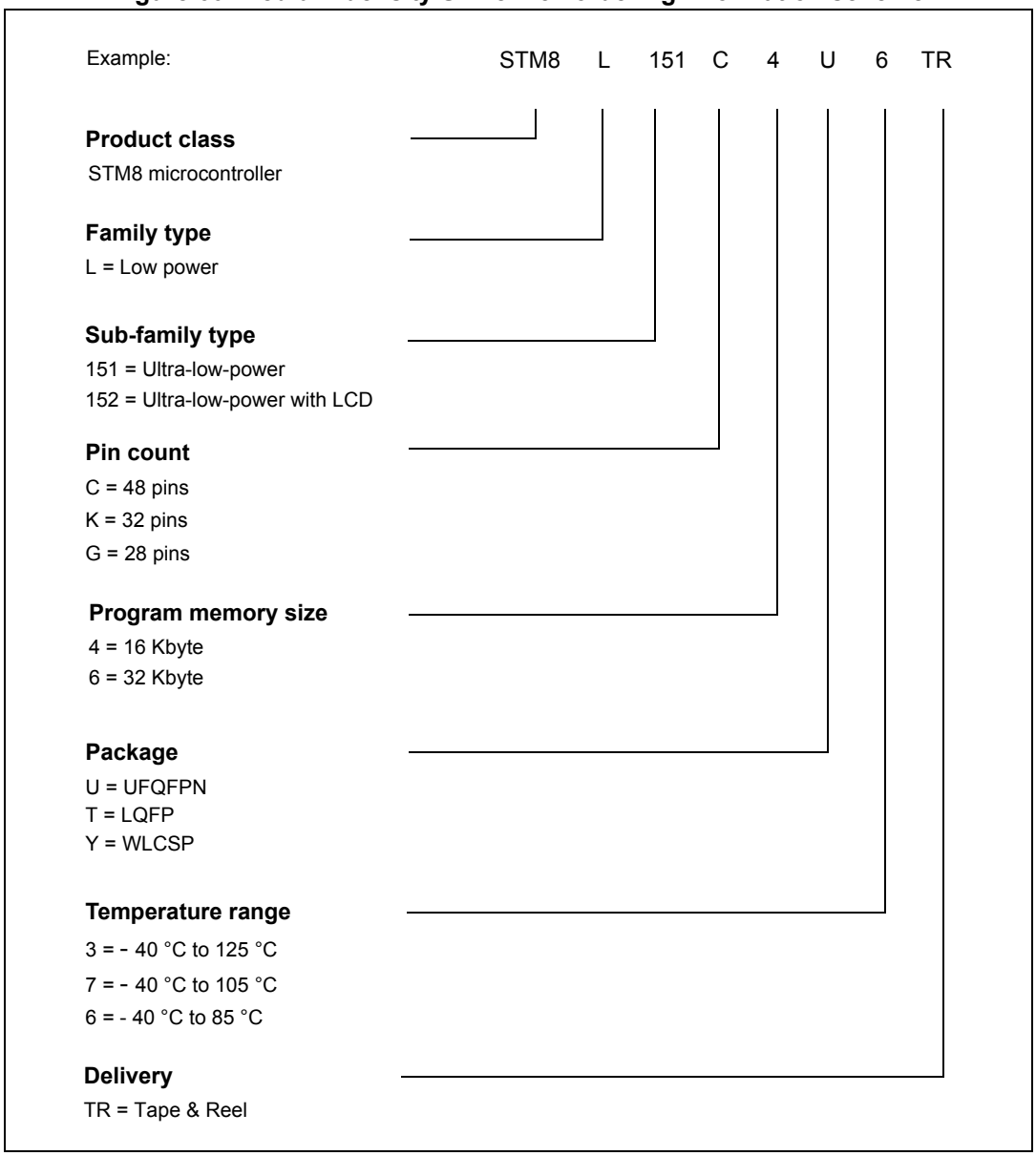

1. For a list of available options (e.g. memory size, package) and orderable part numbers or for further information on any aspect of this device, please contact the ST sales office nearest to you.

12 Revision history

Table 69. Document revision history

Date	Revision	Changes
06-Aug-2009	1	Initial release
10-Sep-2009	2	Updated peripheral naming throughout document. Added *Figure: STM8L151Cx 48-pin pinout (without LCD).* Added capacitive sensing channels in *Features.* Updated PA7, PC0 and PC1 in *Table: Medium density STM8L15x pin description.* Changed CLK and REMAP register names. Changed description of WDGHALT. Added typical power consumption values in *Table 18* to *Table 26.* Corrected VIH max value.
11-Dec-2009	3	Added WLCSP28 package Modified *Figure: Memory map* and added 2 notes. Modified Low power run mode in *Section: Low power modes.* Added *Section: Unique ID.* Modified *Table: Interrupt mapping* (added reserved area at address 0x00 8008) Modified OPT4 option bits in *Table: Option byte addresses.* *Table: Option byte description:* modified OPT0 description (“disable” instead of “enable”) and OPT1 description Added OPTBL option bytes Modified *Section: Electrical parameters.*
02-Apr-2010	4	Changed title of the document (STM8L151x4, STM8L151x6, STM8L152x4, STM8L152x6) Changed pinout (V_{SS1}, V_{DD1}, V_{SS2}, $V_{DD\ 2}$ instead of V_{SS}, $V_{DD,}$ V_{SSIO}, V_{DDIO} Changed packages Changed first page Modified note 1 in *Table: Medium density STM8L15x pin description.* Added note to PA7, PC0, PC1 and PE0 in *Table: Medium density STM8L15x pin description.* Modified *Figure: Memory map.* Modified *Table: WLCSP28 – 28-pin wafer level chip scale package, package mechanical data* (min and max columns swapped) Modified *Figure: WLCSP28 – 28-pin wafer level chip scale package, package outline* (A1 ball location) Renamed Rm, Lm and Cm EXTI_CONF replaced with EXTI_CONF1 in *Table: General hardware register map.* Updated *Section: Electrical parameters.*

Table 69. Document revision history (continued)

Date	Revision	Changes
23-Jul-2010	5	Modified *Introduction* and *Description.* Modified *Table: Legend/abbreviation for table 5* and *Table: Medium density STM8L15x pin description* (for PA0, PA1, PB0 and PB4 and for reset states in the floating input column) Modified *Figure: Low density STM8L151xx device block diagram, Figure: Low density STM8L15x clock tree diagram*, *Figure: Low power modes* and *Figure : Low power real-time clock.* Modified CLK_PCKENR2 and CLK_HSICALR reset values in *Table: General hardware register map.* Modified notes below *Figure: Memory map.* Modified PA_CR1 reset value. Modified reset values for Px_IDR registers. Modified *Table: Voltage characteristics* and *Table: Current characteristics.* Modified V_{IH} in *Table: I/O static characteristics.* Modified *Table: Total current consumption in Wait mode.* Modified *Figure Typical application with I2C bus and timing diagram 1).* Modified I_L value in *Figure: Typical connection diagram using the ADC1.* Modified R_H and R_L in *Table: LCD characteristics.* Added graphs in *Section: Electrical parameters.* Modified note 3 below *Table: Reference voltage characteristics.* Modified note 1 below *Table: TS characteristics.* Changed $V_{ESD(CDM)}$ value in *Table: ESD absolute maximum ratings.* Updated notes for UFQFPN32 and UFQFPN48 packages.
11-Mar-2011	6	Modified note on true open drain I/Os and I/O level columns in *Table: Medium density STM8L15x pin description.* Remapping option removed for USART1_TX, USART1_RX, and USART1_CK on PC2, PC3 and PC4 in *Table: Medium density STM8L15x pin description.* Modified IDWDG_KR reset value in *Table: General hardware register map.* Replaced VREF_OUT with VREFINT and TIMx_TRIG with TIMx_ETR. Added *Table: Factory conversion registers.* Modified reset values for TIM1_DCR1, IWDG_KR, RTC_DR1, RTC_DR2, RTC_SPRERH, RTC_SPRERL, RTC_APRER, RTC_WUTRH, and RTC_WUTRL in *Table: General hardware register map.* Added notes to certain values in *Section: Embedded reference voltage* and *Section: Temperature sensor.*

Table 69. Document revision history (continued)

Date	Revision	Changes
11-Mar-2011	6 cont'd	Modified OPT1 and OPT4 description in *Table: Option byte description.* Updated *Section: Electrical parameters* "standard I/Os" replaced with "high sink I//Os". Updated $R_{HN\ and}$ R_{HN} descriptions in *Table: LCD characteristics.* Added Tape & Reel option to *Figure: Medium density STM8L15x ordering information scheme*.
06-Sep-2011	7	*Features:* updated bullet point concerning capacitive sensing channels. *Section: Low power modes:* updated Wait mode and Halt mode definitions. *Section: Clock management:* added 'kHz' to 32.768 in the 'System clock sources bullet point'. *Section: System configuration controller and routing interface:* replaced last sentence concerning management of charge transfer acquisition sequence. Added *Section: Touchsensing* *Section Development support:* updated the *Bootloader.* *Table: Medium density STM8L15x pin description:* added LQFP32 to second column (same pinout as UFQFPN32); "Timer X - trigger" replaced by "Timer X - external trigger"; added note at the end of this table concerning the slope control of all GPIO pins. *Table: Interrupt mapping:* merged footnotes 1 and 2; updated some of the source blocks and descriptions. *Section: Option bytes*: replaced PM0051 by PM0054 and UM0320 by UM0470. *Table: Option byte description:* replaced the factory default setting (0xAA) for OPT0. *NRST pin:* updated text above the *Figure*; updated *Figure: Recommended NRST pin configuration*. *Table: TS characteristics:* removed typ and max values for the parameter T_{S_TEMP}; added min value for same. *Table: Comparator 1 characteristics:* added typ value for 'Comparator offset error'; added footnote *1.* *Table: Comparator 2 characteristics:* updated t_{START}, t_{dslow}, t_{dfast}, V_{offset}, I_{COMP2}; added footnotes *1.* and *3.* *Table: DAC characteristics:* updated max value for DAC_OUT voltage (DACOUT buffer ON). *Section: 12-bit ADC1 characteristics:* updated. Replaced *Figure: UFQFPN48 7 x 7 mm, 0.5 mm pitch, package outline* and *Figure: UFQFPN48 7 x 7 mm recommended footprint (dimensions in mm)*. *Figure: Medium density STM8L15x ordering information scheme*: removed 'TR = Tape & Reel".

Table 69. Document revision history (continued)

Date	Revision	Changes
10-Feb-2012	8	*Features:* replaced "'Dynamic consumption' with 'Consumption'. *Table: Medium density STM8L15x pin description*: updated OD column of NRST/PA1 pin. *Table: Interrupt mapping:* removed tamper 1, tamper 2 and tamper 3. *Figure: UFQFPN48 package outline:* replaced. *Table: UFQFPN48 package mechanical data:* updated title. *Figure: UFQFPN32 - 32-lead ultra thin fine pitch quad flat no-lead package outline (5 x 5):* removed the line over A1. *Figure: UFQFPN28 package outline:* replaced to improve readability of UFQFPN28 package dimensions A, L, and L1. *Figure: Recommended UFQFPN28 footprint (dimensions in mm)*: updated title. *Figure: WLCSP28 package outline:* updated title. *Table: WLCSP28 package mechanical data:* updated title.
02-Mar-2012	9	Updated *Table: UFQFPN48 package mechanical data.* Updated *Figure: UFQFPN28 package outline, Figure: Recommended UFQFPN28 footprint (dimensions in mm)* and *Table: UFQFPN28 package mechanical data.* *Table: WLCSP28 package mechanical data:* Min and Max values removed for e1, e2, e3, e4, F and G dimensions.
30-Mar-2012	10	*Figure: SPI1 timing diagram - master mode(1):* changed SCK signals to 'output' instead of 'input'. *Figure: Medium density STM8L15x ordering information scheme*: added 'Tape & reel' to package section.
26-Apr-2012	11	Updated *Table: WLCSP28 package mechanical data.*
12-Nov-2013	12	Updated *Table: WLCSP28 package mechanical data.* Updated *Table: Medium-density STM8L15x pin description.* Updated *Table 2: Medium density STM8L15x low power device features and peripheral counts*. Added *Figure: Recommended LQFP48 footprint* and *Figure: Recommended LQFP32 footprint.*
12-Aug-2013	13	Changed the default setting value of OPT5 to 0x00 in *Table: Option byte addresses*. Added tTEMP 'BOR detector enabled' and 'disabled' characteristics in *Table: Embedded reset and power control block characteristics*. Updated E2, D2 and ddd in *Table: UFQFPN48 package mechanical data*

Table 69. Document revision history (continued)

Date	Revision	Changes
21-Apr-2015	14	Added: – *Figure 45: LQFP48 marking example (package top view)*, – *Figure 48: UFQFPN48 marking example (package top view)*, – *Figure 51: LQFP32 marking example (package top view)*, – *Figure 54: UFQFPN32 marking example (package top view)*, – *Figure 57: UFQFPN28 marking example (package top view)*, – *Figure 59: WLCSP28 marking example (package top view)*.
07-Apr-2017	15	Changed symbol V_{125} to V_{90} in *Table 47: TS characteristics* and updated related Min/Typ/Max values. Updated *Section 9.2: Absolute maximum ratings*. Updated table notes for *Table 30*, *Table 31*, *Table 32*, *Table 33*, *Table 34*, *Table 36*, *Table 38*, *Table 42*, *Table 43*, *Table 46*, *Table 47*, *Table 48*, *Table 49*, *Table 53*, *Table 57*, and *Table 60*. Updated device marking paragraphs in *Section 10.2*, *Section 10.3*, *Section 10.4*, *Section 10.5*, *Section 10.6*, and *Section 10.7*.

IMPORTANT NOTICE – PLEASE READ CAREFULLY

STMicroelectronics NV and its subsidiaries (“ST”) reserve the right to make changes, corrections, enhancements, modifications, and improvements to ST products and/or to this document at any time without notice. Purchasers should obtain the latest relevant information on ST products before placing orders. ST products are sold pursuant to ST’s terms and conditions of sale in place at the time of order acknowledgement.

Purchasers are solely responsible for the choice, selection, and use of ST products and ST assumes no liability for application assistance or the design of Purchasers’ products.

No license, express or implied, to any intellectual property right is granted by ST herein.

Resale of ST products with provisions different from the information set forth herein shall void any warranty granted by ST for such product.

ST and the ST logo are trademarks of ST. All other product or service names are the property of their respective owners.

Information in this document supersedes and replaces information previously supplied in any prior versions of this document.

© 2017 STMicroelectronics – All rights reserved

Компания «ЭлектроПласт» предлагает заключение долгосрочных отношений при поставках импортных электронных компонентов на взаимовыгодных условиях!

Наши преимущества:

- Оперативные поставки широкого спектра электронных компонентов отечественного и импортного производства напрямую от производителей и с крупнейших мировых складов;
- Поставка более 17-ти миллионов наименований электронных компонентов;
- Поставка сложных, дефицитных, либо снятых с производства позиций;
- Оперативные сроки поставки под заказ (от 5 рабочих дней);
- Экспресс доставка в любую точку России;
- Техническая поддержка проекта, помощь в подборе аналогов, поставка прототипов;
- Система менеджмента качества сертифицирована по Международному стандарту ISO 9001;
- Лицензия ФСБ на осуществление работ с использованием сведений, составляющих государственную тайну;
- Поставка специализированных компонентов (Xilinx, Altera, Analog Devices, Intersil, Interpoint, Microsemi, Aeroflex, Peregrine, Syfer, Eurofarad, Texas Instrument, Miteq, Cobham, E2V, MA-COM, Hittite, Mini-Circuits,General Dynamics и др.);

Помимо этого, одним из направлений компании «ЭлектроПласт» является направление «Источники питания». Мы предлагаем Вам помощь Конструкторского отдела:

- Подбор оптимального решения, техническое обоснование при выборе компонента;
- Подбор аналогов;
- Консультации по применению компонента;
- Поставка образцов и прототипов;
- Техническая поддержка проекта;
- Защита от снятия компонента с производства.

Как с нами связаться

Телефон: 8 (812) 309 58 32 (многоканальный)
Факс: 8 (812) 320-02-42
Электронная почта: org@eplast1.ru
Адрес: 198099, г. Санкт-Петербург, ул. Калинина, дом 2, корпус 4, литера А.