Panasonic
ideas for life

Phototriac Coupler with various options for external Triac control

Phototriac Coupler (APT1)

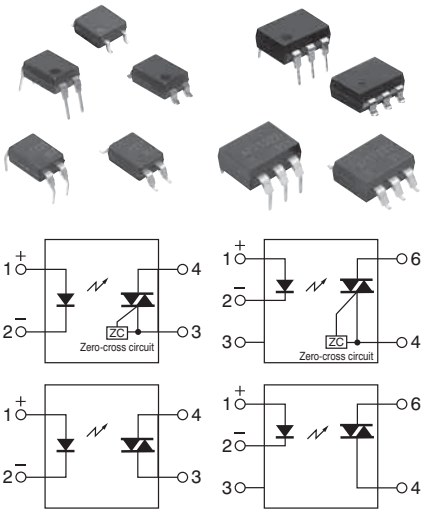

FEATURES

1. Low zero-cross voltage (max. 15 V) type added to lineup. Approximately 1/3 of previous product
Helps reduce device noises even further.

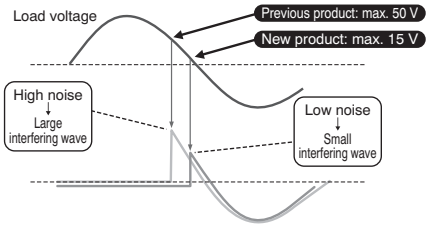

2. Two types available: Random type and zero-cross type
3. Many package sizes available. (Wide terminal type with 10.16 mm pitch between I/O terminals available.)
4. High dielectric strength. (Between input and output: SOP 3, 750 V; DIP 5,000 V)
5. Handles both 100 and 200 V AC loads
This relay handles both voltages in a single product it is not necessary for users that use both types to manage separate part numbers.
6. Terminal 5 of the DIP 6-pin type is completely molded.

TYPICAL APPLICATIONS

1. For triac driver in heater controls of products such as office equipment, home appliances, and industrial machines. (For 100V/200V, 50/60 Hz lines)
2. Triac driver for SSRs

TYPES

1. SOP4 Type

Type	Output rating		Type	Package size	Part No.			Packing quantity	
	Repetitive peak OFF-state voltage	ON-state RMS current			Tube packing style	Tape and reel packing style		Tube	Tape and reel
AC type	600 V	50 mA	Zero-cross (max. 50 V)	SOP4pin	APT1211S	APT1211SX (Picked from the 1/2-pin side)	APT1211SZ (Picked from the 3/4-pin side)	1 tube contains: 100 pcs. 1 batch contains: 2, 000 pcs.	1, 000 pcs.
			Zero-cross (max. 15 V)		APT1231S	APT1231SX (Picked from the 1/2-pin side)	APT1231SZ (Picked from the 3/4-pin side)		
			Random		APT1221S	APT1221SX (Picked from the 1/2-pin side)	APT1221SZ (Picked from the 3/4-pin side)		

Note: For space reasons, the initial letters of the product number “APT” and “S” are omitted on the product seal.
The package type indicator “X” and “Z” are omitted from the seal. (Ex. the label for product number APT1221SZ is 1221).

2. DIP4/6 Type

Type	Output rating		Type	Package size	Part No.				Packing quantity	
	Repetitive peak OFF-state voltage	ON-state RMS current			Through hole terminal	Surface-mount terminal				
					Tube packing style		Tape and reel packing style		Tube	Tape and reel
AC type	600 V	100 mA	Zero-cross (max. 50 V)	DIP4pin	APT1211	APT1211A	APT1211AX (Picked from the 1/2-pin side)	APT1211AZ (Picked from the 3/4-pin side)	[DIP4pin] 1 tube contains: 100 pcs. 1 batch contains: 1,000 pcs. [DIP6pin] 1 tube contains: 50 pcs. 1 batch contains: 500 pcs.	[DIP4pin] [DIP6pin] 1,000 pcs.
			Zero-cross (max. 15 V)		APT1231	APT1231A	APT1231AX (Picked from the 1/2-pin side)	APT1231AZ (Picked from the 3/4-pin side)		
			Random		APT1221	APT1221A	APT1221AX (Picked from the 1/2-pin side)	APT1221AZ (Picked from the 3/4-pin side)		
			Zero-cross (max. 50 V)	DIP6pin	APT1212	APT1212A	APT1212AX (Picked from the 1/2/3-pin side)	APT1212AZ (Picked from the 4/6-pin side)		
			Zero-cross (max. 15 V)		APT1232	APT1232A	APT1232AX (Picked from the 1/2/3-pin side)	APT1232AZ (Picked from the 4/6-pin side)		
			Random		APT1222	APT1222A	APT1222AX (Picked from the 1/2/3-pin side)	APT1222AZ (Picked from the 4/6-pin side)		

Note: For space reasons the initial letters “APT” of the product number for the DIP 4-pin type, the letter “A”, which indicates the SMD terminal shape for the DIP 4-pin and 6-pin types, and the package type indications “X” and “Z” have been omitted from the product label. (Example: The label for product number APT1221AZ is 1221.)

3. DIP4/6 Wide Terminal Type

Type	Output rating*		Type	Package size	Part No.				Packing quantity	
	Repetitive peak OFF-state voltage	ON-state RMS current			Through hole terminal	Surface-mount terminal				
					Tube packing style		Tape and reel packing style		Tube	Tape and reel
AC type	600 V	100 mA	Zero-cross (max. 50 V)	DIP4pin	APT1211W	APT1211WA	APT1211WAY (Picked from the 1/4-pin side)	APT1211WAW (Picked from the 2/3-pin side)	[DIP4pin] 1 tube contains: 100 pcs. 1 batch contains: 1,000 pcs. [DIP6pin] 1 tube contains: 50 pcs. 1 batch contains: 500 pcs.	[DIP4pin] [DIP6pin] 1,000 pcs.
			Zero-cross (max. 15 V)		APT1231W	APT1231WA	APT1231WAY (Picked from the 1/4-pin side)	APT1231WAW (Picked from the 2/3-pin side)		
			Random		APT1221W	APT1221WA	APT1221WAY (Picked from the 1/4-pin side)	APT1221WAW (Picked from the 2/3-pin side)		
			Zero-cross (max. 50 V)	DIP6pin	APT1212W	APT1212WA	APT1212WAY (Picked from the 1/6-pin side)	APT1212WAW (Picked from the 3/4-pin side)		
			Zero-cross (max. 15 V)		APT1232W	APT1232WA	APT1232WAY (Picked from the 1/6-pin side)	APT1232WAW (Picked from the 3/4-pin side)		
			Random		APT1222W	APT1222WA	APT1222WAY (Picked from the 1/6-pin side)	APT1222WAW (Picked from the 3/4-pin side)		

Note: For space reasons the initial letters “APT” of the product number for the DIP 4-pin type, the letter “WA”, which indicates the SMD terminal shape for the DIP 4-pin and 6-pin types, and the package type indications “Y” and “W” have been omitted from the product label. (Example: The label for product number APT1221WAY is 1221.)

RATING

1. Absolute maximum ratings (Ambient temperature: 25°C 77°F)

1) SOP4 types

Item			Symbol	APT1211S, APT1221S, APT1231S	Remarks
Input	LED forward current		I_F	50 mA	
	LED reverse voltage		V_R	6 V	
	Peak forward current		I_{FP}	1 A	f = 100 Hz, Duty Ratio = 0.1%
Output	Repetitive peak OFF-state voltage		V_{DRM}	600 V	
	ON-state RMS current*		$I_{T(RMS)}$	0.05 A	AC
	Non-repetitive surge current		I_{TSM}	0.6 A	In one cycle at 60Hz
Total power dissipation			P_T	350 mW	
I/O isolation voltage			V_{iso}	3,750 V AC	
Temperature limits		Operating	T_{opr}	–40°C to +100°C –40°F to +212°F	Non-condensing at low temperatures
		Storage	T_{stg}	–40°C to +125°C –40°F to +257°F	

Note: “X” and “Z” at the end of the part numbers have been omitted.

2) DIP4/6 type and DIP4/6 Wide terminal type

Item			Symbol	APT1211(W)	APT1221(W)	APT1231(W)	APT1212(W)	APT1222(W)	APT1232(W)	Remarks
Input	LED forward current		I_F	50 mA						
	LED reverse voltage		V_R	6 V						
	Peak forward current		I_{FP}	1 A						f = 100 Hz, Duty Ratio = 0.1%
Output	Repetitive peak OFF-state voltage		V_{DRM}	600 V						
	ON-state RMS current*		$I_{T(RMS)}$	0.1 A						AC
	Non-repetitive surge current		I_{TSM}	1.2 A						In one cycle at 60Hz
Total power dissipation			P_T	500 mW						
I/O isolation voltage			V_{iso}	5,000 V AC						
Temperature limits		Operating	T_{opr}	–40°C to +100°C –40°F to +212°F						Non-condensing at low temperatures
		Storage	T_{stg}	–40°C to +125°C –40°F to +257°F						

Note: “A”, “AX”, “AZ” “AY” and “AW” at the end of the part numbers have been omitted.
* Do not exceed 0.05 A of ON state RMS current in case of following load voltage condition.
DIP4pin (APT1211, APT1221, APT1231) and DIP4pin wide terminal type (APT1211W, APT1221W, APT1231W): more than 100 V AC;
DIP6pin (APT1212, APT1222, APT1232) and DIP6pin wide terminal type (APT1212W, APT1222W, APT1232W): more than 120 V AC.

2. Electrical characteristics (Ambient temperature: 25°C 77°F)

1) Zero-cross voltage type (max. 50V) and random type

Item			Symbol	APT1211S, APT1211(W), APT1212(W)	APT1221S, APT1221(W), APT1222(W)	Condition
Input	LED dropout voltage	Typical	V_F	1.21 V		I_F = 20 mA
		Maximum		1.3 V		
	LED reverse current	Typical	I_R	—		V_R = 6 V
		Maximum		10 μA		
Output	Repetitive peak OFF-state current	Typical	I_{DRM}	—		I_F = 0 mA V_{DRM} = 600 V
		Maximum		1 μA		
	Repetitive peak On-state voltage	Typical	V_{TM}	1.3 V		I_F = 10 mA I_{TM} = 0.05 A
		Maximum		2.5 V		
	Holding current	Typical	I_H	0.3 mA		
		Maximum		3.5 mA		
	Critical rate of rise of OFF-state voltage	Minimum	dv/dt	500 V/μs		V_{DRM} = 600 V ×1/√2
Transfer characteristics	Trigger LED current	Maximum	I_{FT}	10 mA		V_D = 6 V R_L = 100 Ω
	Zero-cross voltage	Maximum	V_{ZC}	50 V	—	I_F = 10 mA
	Turn on time*	Maximum	T_{on}	100 μs		I_F = 20 mA V_D = 6 V R_L = 100 Ω
	I/O capacitance	Maximum	C_{iso}	1.5 pF		f = 1 MHz V_B = 0 V
	I/O resistance	Minimum	R_{iso}	50 GΩ		500 V DC

Notes: 1. For type of connection, see page 8.
2. Terminals are either solder plated or solder dipped.

***Turn on time**

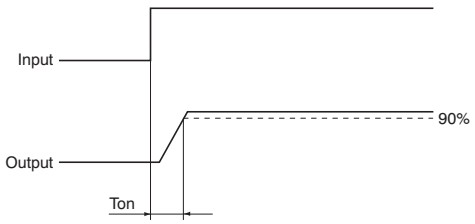

2) Zero-cross voltage type (max. 15V)

Item			Symbol	APT1231S, APT1231(W), APT1232(W)	Condition
Input	LED dropout voltage	Typical	V_F	1.21 V	I_F = 20 mA
		Maximum		1.3 V	
	LED reverse current	Typical	I_R	—	V_R = 6 V
		Maximum		10 μA	
Output	Repetitive peak OFF-state current	Typical	I_{DRM}	—	I_F = 0 mA V_{DRM} = 600 V
		Maximum		1 μA	
	Repetitive peak On-state voltage	Typical	V_{TM}	1.2 V	I_F = 10 mA I_{TM} = 0.03 A
		Maximum		2 V	
	Holding current	Typical	I_H	0.3 mA	
		Maximum		3.5 mA	
	Critical rate of rise of OFF-state voltage	Minimum	dv/dt	500 V/μs	V_{DRM} = 600 V ×1/√2
Transfer characteristics	Trigger LED current	Maximum	I_{FT}	10 mA	I_{DRM} = 30 mA
	Zero-cross voltage	Maximum	V_{ZC}	15 V	I_F = 10 mA
	Turn on time*	Maximum	T_{on}	100 μs	I_F = 20 mA I_{DRM} = 30 mA
	I/O capacitance	Maximum	C_{iso}	1.5 pF	f = 1 MHz V_B = 0 V
	I/O resistance	Minimum	R_{iso}	50 GΩ	500 V DC

Notes: 1. For type of connection, see page 8.
2. Terminals are either solder plated or solder dipped.

***Turn on time**

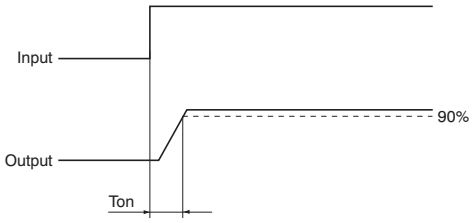

RECOMMENDED OPERATING CONDITIONS

Please follow the conditions below in order to ensure accurate operation and release of the phototriac coupler.

Item	Symbol	Value	Unit
Input LED current	I_F	20	mA

REFERENCE DATA

1-(1). ON-state RMS current vs. ambient temperature characteristics

Allowable ambient temperature: –40°C to +100°C
–40°F to +212°F

Tested sample: APT1211S, APT1221S

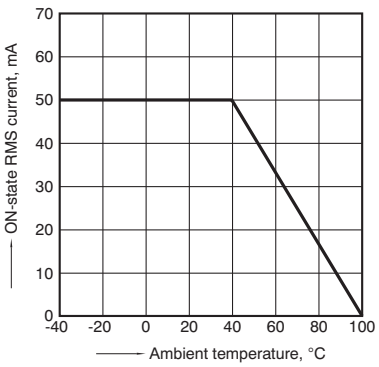

1-(2). ON-state RMS current vs. ambient temperature characteristics

Allowable ambient temperature: –40°C to +100°C
–40°F to +212°F

Tested sample: APT1231S

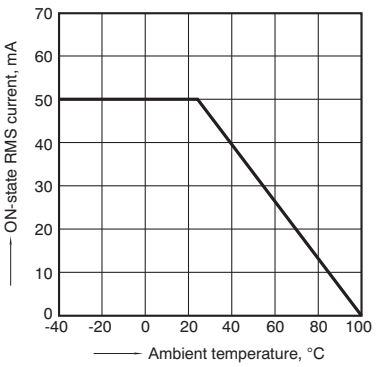

1-(3). ON-state RMS current vs. ambient temperature characteristics

Allowable ambient temperature: –40°C to +100°C
–40°F to +212°F

Tested sample: APT1211(A), APT1221(A), APT1211W(A), APT1221W(A)

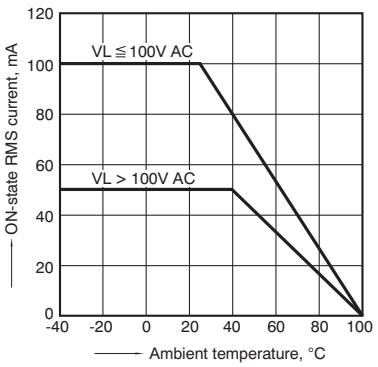

1-(4). ON-state RMS current vs. ambient temperature characteristics

Allowable ambient temperature: –40°C to +100°C
–40°F to +212°F

Tested sample: APT1231(A), APT1231W(A)

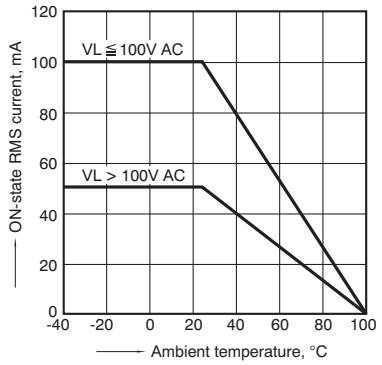

1-(5). ON-state RMS current vs. ambient temperature characteristics

Allowable ambient temperature: –40°C to +100°C
–40°F to +212°F

Tested sample: APT1212(A), APT1222(A), APT1212W(A), APT1222W(A)

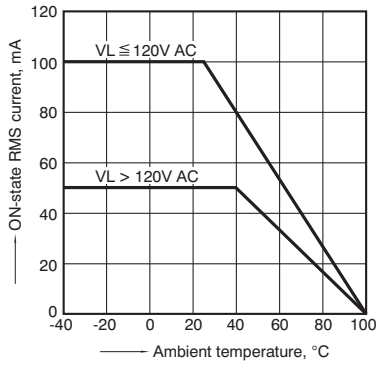

1-(6). ON-state RMS current vs. ambient temperature characteristics

Allowable ambient temperature: –40°C to +100°C
–40°F to +212°F

Tested sample: APT1232(A), APT1232W(A)

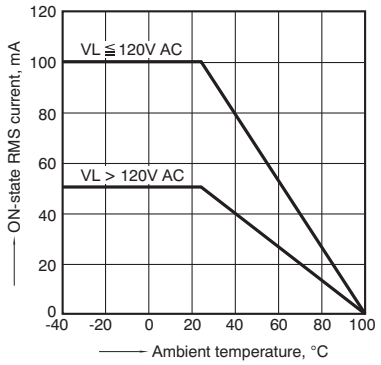

2. On voltage vs. ambient temperature characteristics

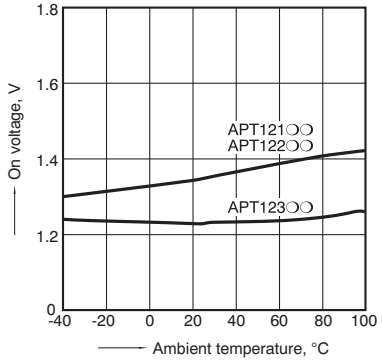

3. Trigger LED current vs. ambient temperature characteristics

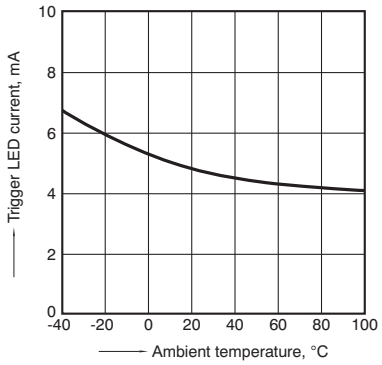

4. LED dropout voltage vs. ambient temperature characteristics

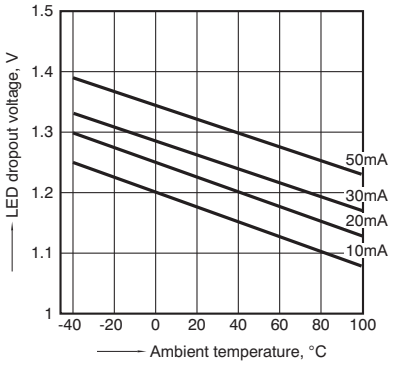

5. Turn on time vs. LED current

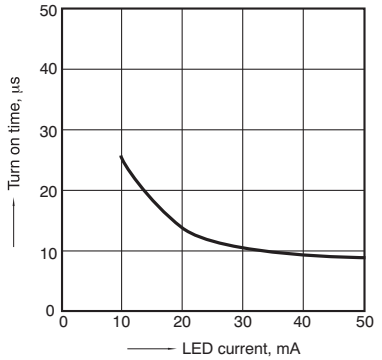

6. Repetitive peak OFF-state current vs. Load voltage characteristics

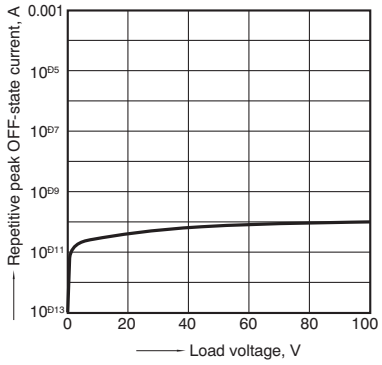

7. Hold current vs. ambient temperature characteristics

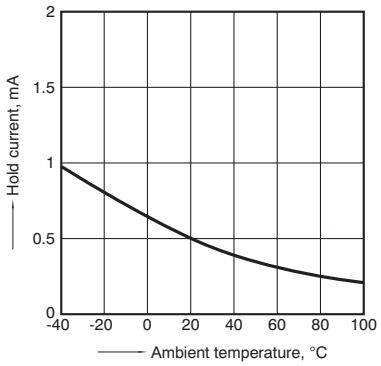

8. Zero-cross voltage vs. ambient temperature characteristics

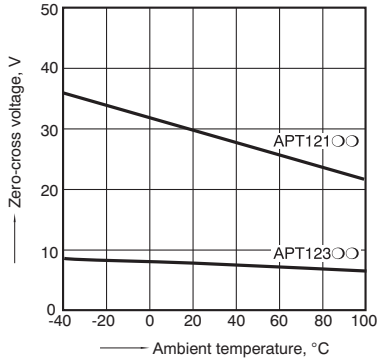

DIMENSIONS (mm inch)

Download CAD Data from our Web site.

1. SOP Type

APT1211S, APT1221S, APT1231S

CAD Data

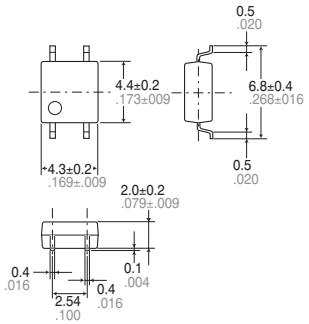

Terminal thickness = 0.15 .006
General tolerance: ±0.1 ±.004

Recommended mounting pad (TOP VIEW)

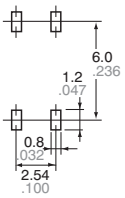

Tolerance: ±0.1 ±.004

2. DIP4 Type

APT1211(A), APT1221(A), APT1231(A)

CAD Data

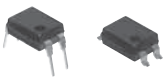

Through hole terminal type

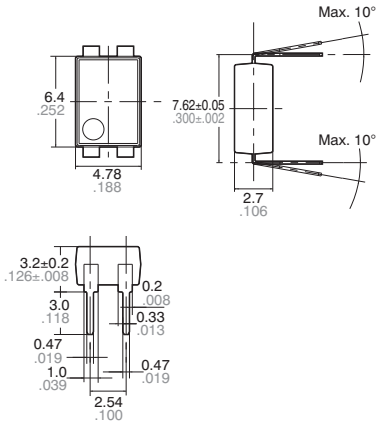

Surface mount terminal type

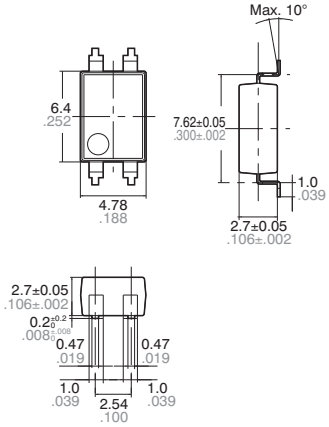

Terminal thickness = 0.2 .008
General tolerance: ±0.1 ±.004

PC board pattern (BOTTOM VIEW)

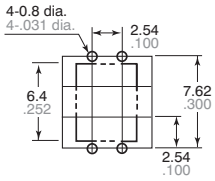

Tolerance: ±0.1 ±.004

Recommended mounting pad (TOP VIEW)

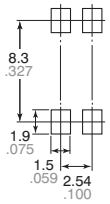

Tolerance: ±0.1 ±.004

3. DIP4 Wide Terminal Type

APT1211W(A), APT1221W(A), APT1231W(A)

CAD Data

Through hole terminal type

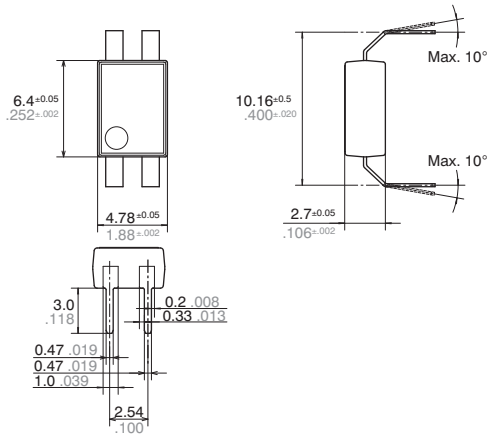

Surface mount terminal type

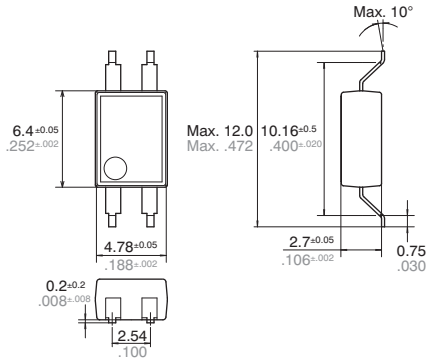

Terminal thickness = 0.20 .008
General tolerance: ±0.1 ±.004

PC board pattern (BOTTOM VIEW)

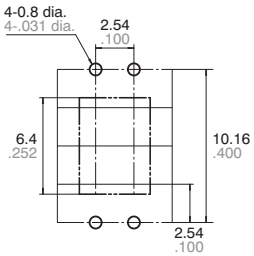

Tolerance: ±0.1 ±.004

Recommended mounting pad (TOP VIEW)

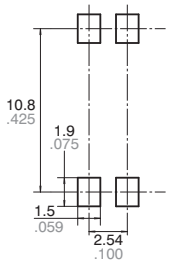

Tolerance: ±0.1 ±.004

4. DIP6 Type

APT1212(A), APT1222(A), APT1232(A)

CAD Data

Through hole terminal type

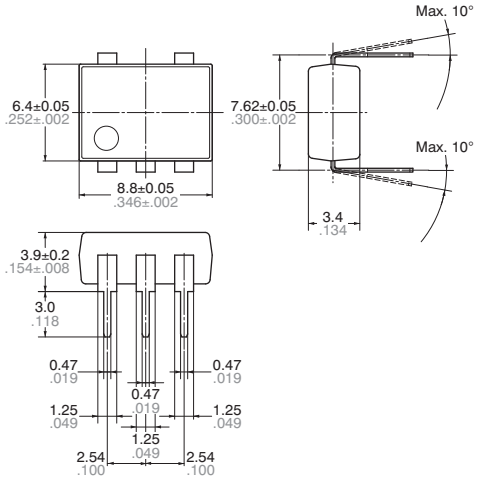

Surface mount terminal type

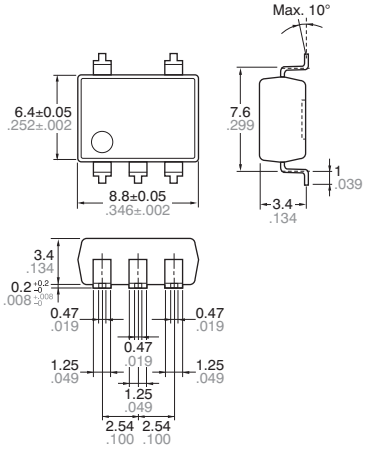

Terminal thickness = 0.25 .010
General tolerance: ±0.1 ±.004

PC board pattern (BOTTOM VIEW)

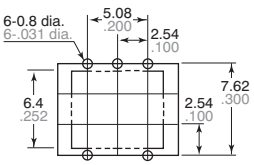

Tolerance: ±0.1 ±.004

Recommended mounting pad (TOP VIEW)

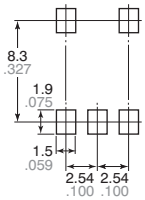

Tolerance: ±0.1 ±.004

5. DIP6 Wide Terminal Type

APT1212W(A), APT1222W(A), APT1232W(A)

CAD Data

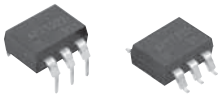

Through hole terminal type

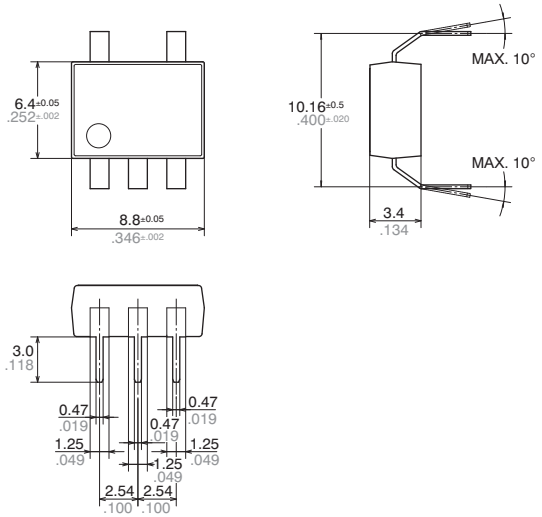

Surface mount terminal type

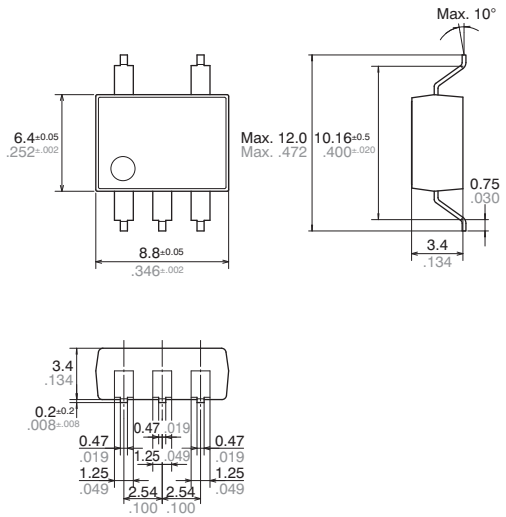

Terminal thickness = 0.25 .010

General tolerance: ±0.1 ±.004

PC board pattern (BOTTOM VIEW)

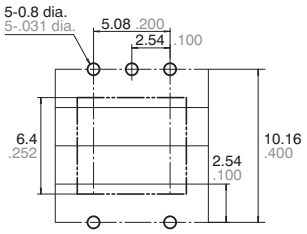

Tolerance: ±0.1 ±.004

Recommended mounting pad (TOP VIEW)

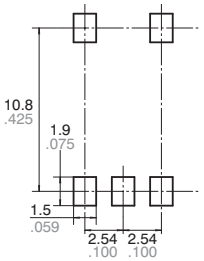

Tolerance: ±0.1 ±.004

SCHEMATIC AND WIRING DIAGRAMS

Notes: E_1: Power source at input side; I_F: LED forward current; V_L: Load voltage; I_L: Load current;

Schematic	Output configuration	Load	Wiring diagram
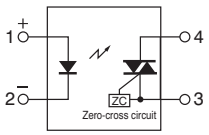	1 Form A	AC	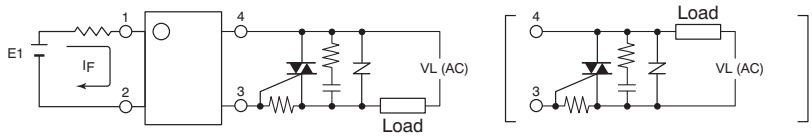
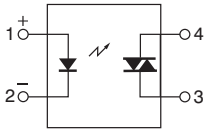			
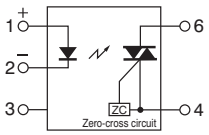			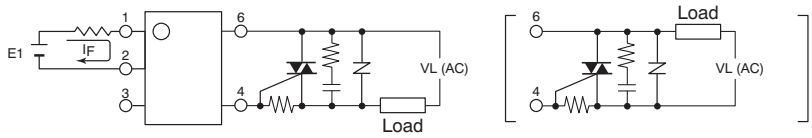
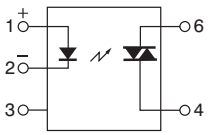			

See special section on Phototriac Couplers in Cautions for Use

Компания «ЭлектроПласт» предлагает заключение долгосрочных отношений при поставках импортных электронных компонентов на взаимовыгодных условиях!

Наши преимущества:

- Оперативные поставки широкого спектра электронных компонентов отечественного и импортного производства напрямую от производителей и с крупнейших мировых складов;
- Поставка более 17-ти миллионов наименований электронных компонентов;
- Поставка сложных, дефицитных, либо снятых с производства позиций;
- Оперативные сроки поставки под заказ (от 5 рабочих дней);
- Экспресс доставка в любую точку России;
- Техническая поддержка проекта, помощь в подборе аналогов, поставка прототипов;
- Система менеджмента качества сертифицирована по Международному стандарту ISO 9001;
- Лицензия ФСБ на осуществление работ с использованием сведений, составляющих государственную тайну;
- Поставка специализированных компонентов (Xilinx, Altera, Analog Devices, Intersil, Interpoint, Microsemi, Aeroflex, Peregrine, Syfer, Eurofarad, Texas Instrument, Miteq, Cobham, E2V, MA-COM, Hittite, Mini-Circuits,General Dynamics и др.);

Помимо этого, одним из направлений компании «ЭлектроПласт» является направление «Источники питания». Мы предлагаем Вам помощь Конструкторского отдела:

- Подбор оптимального решения, техническое обоснование при выборе компонента;
- Подбор аналогов;
- Консультации по применению компонента;
- Поставка образцов и прототипов;
- Техническая поддержка проекта;
- Защита от снятия компонента с производства.

Как с нами связаться

Телефон: 8 (812) 309 58 32 (многоканальный)
Факс: 8 (812) 320-02-42
Электронная почта: org@eplast1.ru
Адрес: 198099, г. Санкт-Петербург, ул. Калинина, дом 2, корпус 4, литера А.