⚠Note • Please read rating and ⚠CAUTION (for storage, operating, rating, soldering, mounting and handling) in this catalog to prevent smoking and/or burning, etc.
• This catalog has only typical specifications. Therefore, please approve our product specifications or transact the approval sheet for product specifications before ordering.

C49E.pdf
Mar.12,2014

Radial Lead Type Monolithic Ceramic Capacitors

muRata Innovator in Electronics

Murata
Manufacturing Co., Ltd.

Cat.No.C49E-22

EU RoHS Compliant

- All the products in this catalog comply with EU RoHS.
- EU RoHS is "the European Directive 2011/65/EU on the Restriction of the Use of Certain Hazardous Substances in Electrical and Electronic Equipment."
- For more details, please refer to our website 'Murata's Approach for EU RoHS' (http://www.murata.com/info/rohs.html).

CONTENTS

Part Numbering — 2

1 RCE Series 125°C max. (for Automotive) (DC25V-DC1kV) — 4

● Marking — 6

Temperature Compensating Type, C0G/U2J Characteristics — 6

High Dielectric Constant Type, X7R/X7S Characteristics — 11

● Specifications and Test Methods — 14

2 RHE Series 150°C max. (for Automotive) (DC50V-DC100V) — 20

● Marking — 21

Temperature Compensating Type, X8G Characteristics — 22

High Dielectric Constant Type, X8L Characteristics — 23

● Specifications and Test Methods — 26

3 RDE Series (For General Use Only) (DC25V-DC1kV) — 29

● Marking — 30

Temperature Compensating Type, C0G/U2J Characteristics — 30

High Dielectric Constant Type, X7R/X7S Characteristics — 35

High Dielectric Constant Type, F/Y5V Characteristics — 38

● Specifications and Test Methods — 39

4 RDE Series Large Capacitance and High Allowable Ripple Current (For General Use Only) (DC250V-DC630V) — 42

● Marking — 43

High Dielectric Constant Type, X7T Characteristics — 43

● Specifications and Test Methods — 45

Reference Data (Typical Example) — 47

RCE Series — 47

RHE Series — 48

RDE Series — 49

Packaging — 50

⚠Caution — 52

Notice — 54

Part Numbering

Radial Lead Type Monolithic Ceramic Capacitors

(Part Number) RC E R7 1H 104 K 0 M1 H03 A
❶ ❷ ❸ ❹ ❺ ❻ ❼ ❽ ❾ ❿

❶Product ID

❷Series/Terminal

Product ID	Series/Terminal	
RC	E	Radial Lead Type Monolithic Ceramic Capacitors 125°C max. (for Automotive) (DC25V-DC1kV)
RH	E	Radial Lead Type Monolithic Ceramic Capacitors 150°C max. (for Automotive) (DC50V-DC100V)
RD	E	Radial Lead Type Monolithic Ceramic Capacitors (Only for General Use) (DC25V-DC1kV)

❸Temperature Characteristics

Code	Temperature Characteristics	Reference Temperature	Temperature Range	Capacitance Change or Temperature Coefficient	Operating Temperature Range
5C	C0G*	25°C	25 to 125°C	0±30ppm/°C	-55 to 125°C
5G	X8G*	25°C	25 to 150°C	0±30ppm/°C	-55 to 150°C
7U	U2J	25°C	25 to 125°C	-750±120ppm/°C	-55 to 125°C
C7	X7S	25°C	-55 to 125°C	±22%	-55 to 125°C
D7	X7T	25°C	-55 to 125°C	+22, -33%	-55 to 125°C
F1	F	20°C	-25 to 85°C	+30, -80%	-25 to 85°C
F5	Y5V	25°C	-30 to 85°C	+22, -82%	-30 to 85°C
L8	X8L	25°C	-55 to 125°C	±15%	-55 to 150°C
			125 to 150°C	+15, -40%	
R7	X7R	25°C	-55 to 125°C	±15%	-55 to 125°C

* Please refer to table for Capacitance change under reference temperature.

• Capacitance change from each temperature

Char.	Nominal Values (ppm/°C) *1	Capacitance Change from 25°C (%)					
		-55°C		-30°C		-10°C	
		Max.	Min.	Max.	Min.	Max.	Min.
C0G	0±30	0.58	-0.24	0.40	-0.17	0.25	-0.11
X8G							
U2J	-750±120	8.78	5.04	6.04	3.47	3.84	2.21

*1: Nominal values denote the temperature coefficient within a range of 25 to 125°C.

❹Rated Voltage

Code	Rated Voltage
1E	DC25V
1H	DC50V
2A	DC100V
2E	DC250V
2W	DC450V
2J	DC630V
3A	DC1kV

❺Capacitance

Expressed by three figures. The unit is pico-farad (pF). The first and second figures are significant digits, and the third figure expresses the number of zeros that follow the two numbers.
If there is a decimal point, it is expressed by the capital letter "**R**."
In this case, all figures are significant digits.

❻Capacitance Tolerance

Code	Capacitance Tolerance	Temperature Characteristics	Capacitance Step
C	±0.25pF	C0G/X8G	≦5pF : 1pF Step
D	±0.5pF		6 to 9pF : 1pF Step
J	±5%		≧10 : E12 Series
K	±10%	X7S/X7T/X7R/X8L	E6 Series
M	±20%	X7S/X7T/X7R/X8L	E3 Series
Z	+80%, -20%	F/Y5V	E3 Series

Continued on the following page. ↗

Continued from the preceding page.

❼Dimensions (LxW)

Code	Dimensions (LxW)
0	3.6×3.5mm or 4.0×3.5mm or 5.0×3.5mm (Depends on Part Number List)
1	4.0×3.5mm or 4.5×3.5mm or 5.0×3.5mm (Depends on Part Number List)
2	5.5×4.0mm
3	5.5×5.0mm
4	7.5×5.5mm
5	7.5×7.5mm (DC630V, DC1kV: 7.5×8.0mm)
U	7.7×12.5mm (DC630V, DC1kV: 7.7×13.0mm)
W	5.5×7.5mm

❽Lead Style

Code	Lead Style	Lead Spacing
A2	Straight Long	2.5mm
B1	Straight Long	5.0mm
DB	Straight Taping	2.5mm
E1/E2	Straight Taping	5.0mm
K1	Inside Crimp	5.0mm
M1/M2	Inside Crimp Taping	5.0mm
P1	Outside Crimp	2.5mm
S1/S2	Outside Crimp Taping	2.5mm

Lead distance between reference and bottom planes.
M1, S1, DB : H_0 = 16.0±0.5mm
M2, S2 : H_0 = 20.0±0.5mm
E1 : H = 17.5±0.5mm
E2 : H = 20.0±0.5mm

❾Individual Specification Code
Expressed by three figures

❿Packaging

Code	Packaging
A	Ammo Pack
B	Bulk

Radial Lead Type Monolithic Ceramic Capacitors

muRata

RCE Series 125°C max. (for Automotive) (DC25V-DC1kV)

■ Features

1. Small size and large capacitance
2. Low ESR and ESL suitable for high frequency
3. Meet AEC-Q200, ISO7637-2 (surge test) requirement
4. Meet LF (Lead Free) and HF (Halogen Free)
5. Flow soldering and welding are available.
   (Re-flow soldering is not available.)
6. If copper wire is necessary at welding process,
   copper wire is available based on request.

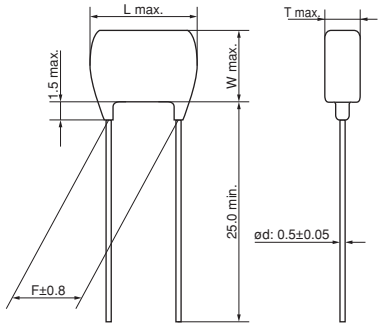

Dimensions code: 0
Lead style code: A2

· Lead Wire: Solder Coated CP Wire

(in mm)

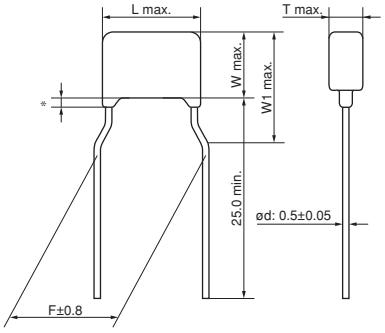

Dimensions code: 0
Lead style code: K1

∗ Coating extension does not exceed the end of the lead bend.
· Lead Wire: Solder Coated CP Wire

(in mm)

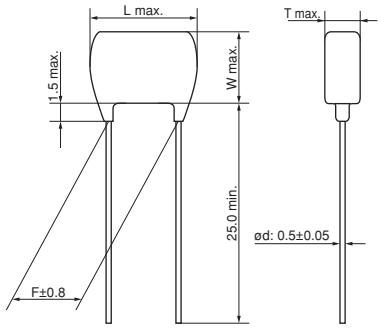

Dimensions code: 1
Lead style code: A2

· Lead Wire: Solder Coated CP Wire

(in mm)

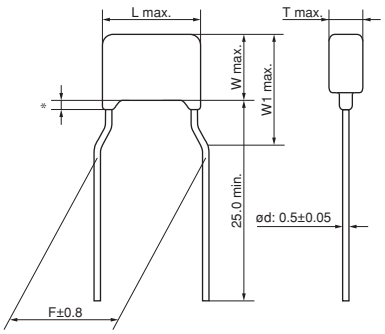

Dimensions code: 1
Lead style code: K1

∗ Coating extension does not exceed the end of the lead bend.
· Lead Wire: Solder Coated CP Wire

(in mm)

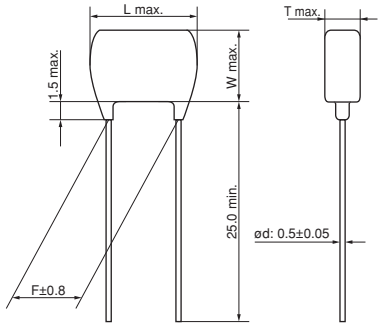

Dimensions code: 2
Lead style code: A2

· Lead Wire: Solder Coated CP Wire

(in mm)

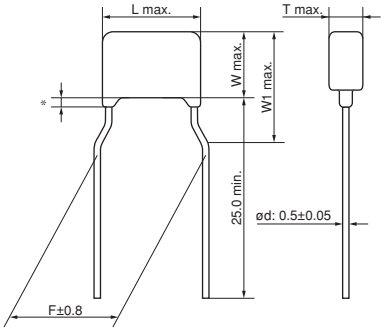

Dimensions code: 2
Lead style code: K1

∗ Coating extension does not exceed the end of the lead bend.
· Lead Wire: Solder Coated CP Wire

(in mm)

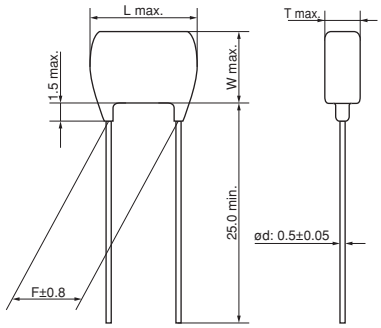

Dimensions code: 3
Lead style code: A2

· Lead Wire: Solder Coated CP Wire

(in mm)

Continued on the following page. ↗

Continued from the preceding page.

Dimensions code: 3
Lead style code: K1

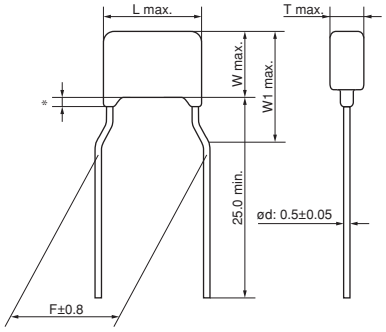

∗ Coating extension does not exceed the end of the lead bend.
· Lead Wire: Solder Coated CP Wire

(in mm)

Dimensions code: 4
Lead style code: K1

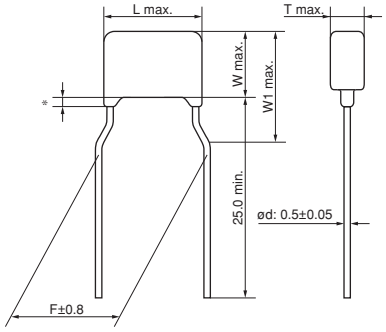

∗ Coating extension does not exceed the end of the lead bend.
· Lead Wire: Solder Coated CP Wire

(in mm)

Dimensions code: 5
Lead style code: B1

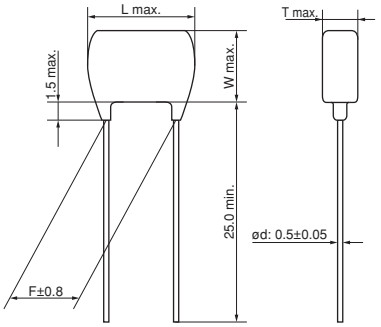

· Lead Wire: Solder Coated CP Wire

(in mm)

Dimensions code: U
Lead style code: B1

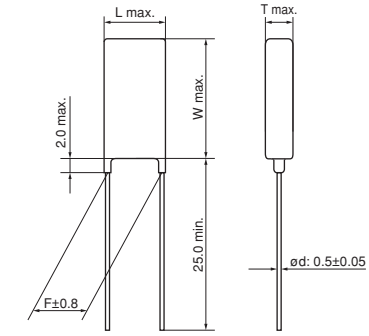

· Lead Wire: Solder Coated CP Wire

(in mm)

Dimensions code: W
Lead style code: K1

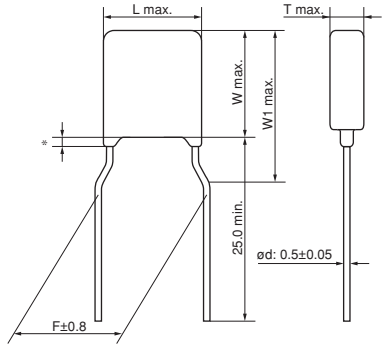

∗ Coating extension does not exceed the end of the lead bend.
· Lead Wire: Solder Coated CP Wire

(in mm)

■ Dimensions

Dimensions and Lead Style Code	Dimensions (mm)					
	L	W	W1	T	F	d
0A2/0DB	3.6	3.5	-	See the individual product specification	2.5	0.5
0K1/0M1	3.6	3.5	6.0		5.0	0.5
1A2/1DB	4.0	3.5	-		2.5	0.5
1K1/1M1	4.0	3.5	5.0		5.0	0.5
2A2/2DB	5.5	4.0	-		2.5	0.5
2K1/2M1	5.5	4.0	6.0		5.0	0.5
3A2/3DB	5.5	5.0	-		2.5	0.5
3K1/3M1	5.5	5.0	7.5		5.0	0.5
4K1/4M1	7.5	5.5	8.0		5.0	0.5
5B1/5E1	7.5	7.5*	-		5.0	0.5
UB1/UE1	7.7	12.5*	-		5.0	0.5
WK1/WM1	5.5	7.5	10.0		5.0	0.5

*DC630V, DC1kV: W+0.5mm

■ Marking

Dimensions Code \ Rated Voltage	DC25V		DC50V			DC100V			DC250V	DC630V	DC1kV
Temp. Char.	X7S	X7R	C0G	X7S	X7R	C0G	X7S	X7R	X7R, U2J		
0	224K	104K	A 102J	–	224K	A 102J	–	224K	–	–	–
1		–		–			–		U 102J	–	–
2	Ⓜ 475 K2C	–	–	Ⓜ 475 K5C	Ⓜ 105 K5C	–	–	Ⓜ 105 K1C	Ⓜ 103 J4U (U2J) Ⓜ 473 K4C (X7R)	Ⓜ 472 J7U (U2J) Ⓜ 153 K7C (X7R)	Ⓜ 102 JAU (U2J) Ⓜ 102 KAC (X7R)
3, 4, W	Ⓜ 226 K2C	–	–	–	Ⓜ 335 K5C	–	Ⓜ 225 K1C	–	Ⓜ 473 J4U (U2J) Ⓜ 224 K4C (X7R)	Ⓜ 103 J7U (U2J) Ⓜ 104 K7C (X7R)	Ⓜ 472 JAU (U2J) Ⓜ 333 KAC (X7R)
5, U	–	–	–	–	–	–	–	–	–	Ⓜ 333 J7U (U2J) Ⓜ 474 K4C (X7R)	Ⓜ 103 JAU (U2J) Ⓜ 474 M7C (X7R)

Temperature Characteristics	Marked with code (C0G char.: A, X7S/X7R char.: C, U2J char.: U) A part is omitted (Please refer to the marking example.)
Nominal Capacitance	Under 100pF: Actual value 100pF and over: Marked with 3 figures
Capacitance Tolerance	Marked with code A part is omitted (Please refer to the marking example.)
Rated Voltage	Marked with code (DC25V: 2, DC50V: 5, DC100V: 1, DC250V: 4, DC630V: 7, DC1kV: A) A part is omitted (Please refer to the marking example.)
Manufacturer's Identification	Marked with Ⓜ A part is omitted (Please refer to the marking example.)

Temperature Compensating Type, C0G/U2J Characteristics

Part Number	Temp. Char.	Rated Voltage	Capacitance	Dimensions LxW (mm)	Dimension T (mm)	Lead Space F (mm)	Lead Style Code Bulk	Lead Style Code Taping
RCE5C1H1R0C0□□H03□	C0G (EIA)	50Vdc	1.0pF±5%	3.6×3.5	2.5	2.5	A2	DB
RCE5C1H1R0C0□□H03□	C0G (EIA)	50Vdc	1.0pF±5%	3.6×3.5	2.5	5.0	K1	M1
RCE5C1H2R0C0□□H03□	C0G (EIA)	50Vdc	2.0pF±5%	3.6×3.5	2.5	2.5	A2	DB
RCE5C1H2R0C0□□H03□	C0G (EIA)	50Vdc	2.0pF±5%	3.6×3.5	2.5	5.0	K1	M1
RCE5C1H3R0C0□□H03□	C0G (EIA)	50Vdc	3.0pF±5%	3.6×3.5	2.5	2.5	A2	DB
RCE5C1H3R0C0□□H03□	C0G (EIA)	50Vdc	3.0pF±5%	3.6×3.5	2.5	5.0	K1	M1
RCE5C1H4R0C0□□H03□	C0G (EIA)	50Vdc	4.0pF±5%	3.6×3.5	2.5	2.5	A2	DB
RCE5C1H4R0C0□□H03□	C0G (EIA)	50Vdc	4.0pF±5%	3.6×3.5	2.5	5.0	K1	M1
RCE5C1H5R0C0□□H03□	C0G (EIA)	50Vdc	5.0pF±5%	3.6×3.5	2.5	2.5	A2	DB
RCE5C1H5R0C0□□H03□	C0G (EIA)	50Vdc	5.0pF±5%	3.6×3.5	2.5	5.0	K1	M1
RCE5C1H6R0D0□□H03□	C0G (EIA)	50Vdc	6.0pF±5%	3.6×3.5	2.5	2.5	A2	DB
RCE5C1H6R0D0□□H03□	C0G (EIA)	50Vdc	6.0pF±5%	3.6×3.5	2.5	5.0	K1	M1
RCE5C1H7R0D0□□H03□	C0G (EIA)	50Vdc	7.0pF±5%	3.6×3.5	2.5	2.5	A2	DB
RCE5C1H7R0D0□□H03□	C0G (EIA)	50Vdc	7.0pF±5%	3.6×3.5	2.5	5.0	K1	M1
RCE5C1H8R0D0□□H03□	C0G (EIA)	50Vdc	8.0pF±5%	3.6×3.5	2.5	2.5	A2	DB

Continued on the following page.

Continued from the preceding page.

Part Number	Temp. Char.	Rated Voltage	Capacitance	Dimensions LxW (mm)	Dimension T (mm)	Lead Space F (mm)	Lead Style Code Bulk	Lead Style Code Taping
RCE5C1H8R0D0□□H03□	C0G (EIA)	50Vdc	8.0pF±5%	3.6×3.5	2.5	5.0	K1	M1
RCE5C1H9R0D0□□H03□	C0G (EIA)	50Vdc	9.0pF±5%	3.6×3.5	2.5	2.5	A2	DB
RCE5C1H9R0D0□□H03□	C0G (EIA)	50Vdc	9.0pF±5%	3.6×3.5	2.5	5.0	K1	M1
RCE5C1H100J0□□H03□	C0G (EIA)	50Vdc	10pF±5%	3.6×3.5	2.5	2.5	A2	DB
RCE5C1H100J0□□H03□	C0G (EIA)	50Vdc	10pF±5%	3.6×3.5	2.5	5.0	K1	M1
RCE5C1H120J0□□H03□	C0G (EIA)	50Vdc	12pF±5%	3.6×3.5	2.5	2.5	A2	DB
RCE5C1H120J0□□H03□	C0G (EIA)	50Vdc	12pF±5%	3.6×3.5	2.5	5.0	K1	M1
RCE5C1H150J0□□H03□	C0G (EIA)	50Vdc	15pF±5%	3.6×3.5	2.5	2.5	A2	DB
RCE5C1H150J0□□H03□	C0G (EIA)	50Vdc	15pF±5%	3.6×3.5	2.5	5.0	K1	M1
RCE5C1H180J0□□H03□	C0G (EIA)	50Vdc	18pF±5%	3.6×3.5	2.5	2.5	A2	DB
RCE5C1H180J0□□H03□	C0G (EIA)	50Vdc	18pF±5%	3.6×3.5	2.5	5.0	K1	M1
RCE5C1H220J0□□H03□	C0G (EIA)	50Vdc	22pF±5%	3.6×3.5	2.5	2.5	A2	DB
RCE5C1H220J0□□H03□	C0G (EIA)	50Vdc	22pF±5%	3.6×3.5	2.5	5.0	K1	M1
RCE5C1H270J0□□H03□	C0G (EIA)	50Vdc	27pF±5%	3.6×3.5	2.5	2.5	A2	DB
RCE5C1H270J0□□H03□	C0G (EIA)	50Vdc	27pF±5%	3.6×3.5	2.5	5.0	K1	M1
RCE5C1H330J0□□H03□	C0G (EIA)	50Vdc	33pF±5%	3.6×3.5	2.5	2.5	A2	DB
RCE5C1H330J0□□H03□	C0G (EIA)	50Vdc	33pF±5%	3.6×3.5	2.5	5.0	K1	M1
RCE5C1H390J0□□H03□	C0G (EIA)	50Vdc	39pF±5%	3.6×3.5	2.5	2.5	A2	DB
RCE5C1H390J0□□H03□	C0G (EIA)	50Vdc	39pF±5%	3.6×3.5	2.5	5.0	K1	M1
RCE5C1H470J0□□H03□	C0G (EIA)	50Vdc	47pF±5%	3.6×3.5	2.5	2.5	A2	DB
RCE5C1H470J0□□H03□	C0G (EIA)	50Vdc	47pF±5%	3.6×3.5	2.5	5.0	K1	M1
RCE5C1H560J0□□H03□	C0G (EIA)	50Vdc	56pF±5%	3.6×3.5	2.5	2.5	A2	DB
RCE5C1H560J0□□H03□	C0G (EIA)	50Vdc	56pF±5%	3.6×3.5	2.5	5.0	K1	M1
RCE5C1H680J0□□H03□	C0G (EIA)	50Vdc	68pF±5%	3.6×3.5	2.5	2.5	A2	DB
RCE5C1H680J0□□H03□	C0G (EIA)	50Vdc	68pF±5%	3.6×3.5	2.5	5.0	K1	M1
RCE5C1H820J0□□H03□	C0G (EIA)	50Vdc	82pF±5%	3.6×3.5	2.5	2.5	A2	DB
RCE5C1H820J0□□H03□	C0G (EIA)	50Vdc	82pF±5%	3.6×3.5	2.5	5.0	K1	M1
RCE5C1H101J0□□H03□	C0G (EIA)	50Vdc	100pF±5%	3.6×3.5	2.5	2.5	A2	DB
RCE5C1H101J0□□H03□	C0G (EIA)	50Vdc	100pF±5%	3.6×3.5	2.5	5.0	K1	M1
RCE5C1H121J0□□H03□	C0G (EIA)	50Vdc	120pF±5%	3.6×3.5	2.5	2.5	A2	DB
RCE5C1H121J0□□H03□	C0G (EIA)	50Vdc	120pF±5%	3.6×3.5	2.5	5.0	K1	M1
RCE5C1H151J0□□H03□	C0G (EIA)	50Vdc	150pF±5%	3.6×3.5	2.5	2.5	A2	DB
RCE5C1H151J0□□H03□	C0G (EIA)	50Vdc	150pF±5%	3.6×3.5	2.5	5.0	K1	M1
RCE5C1H181J0□□H03□	C0G (EIA)	50Vdc	180pF±5%	3.6×3.5	2.5	2.5	A2	DB
RCE5C1H181J0□□H03□	C0G (EIA)	50Vdc	180pF±5%	3.6×3.5	2.5	5.0	K1	M1
RCE5C1H221J0□□H03□	C0G (EIA)	50Vdc	220pF±5%	3.6×3.5	2.5	2.5	A2	DB
RCE5C1H221J0□□H03□	C0G (EIA)	50Vdc	220pF±5%	3.6×3.5	2.5	5.0	K1	M1
RCE5C1H271J0□□H03□	C0G (EIA)	50Vdc	270pF±5%	3.6×3.5	2.5	2.5	A2	DB
RCE5C1H271J0□□H03□	C0G (EIA)	50Vdc	270pF±5%	3.6×3.5	2.5	5.0	K1	M1
RCE5C1H331J0□□H03□	C0G (EIA)	50Vdc	330pF±5%	3.6×3.5	2.5	2.5	A2	DB
RCE5C1H331J0□□H03□	C0G (EIA)	50Vdc	330pF±5%	3.6×3.5	2.5	5.0	K1	M1
RCE5C1H391J0□□H03□	C0G (EIA)	50Vdc	390pF±5%	3.6×3.5	2.5	2.5	A2	DB
RCE5C1H391J0□□H03□	C0G (EIA)	50Vdc	390pF±5%	3.6×3.5	2.5	5.0	K1	M1
RCE5C1H471J0□□H03□	C0G (EIA)	50Vdc	470pF±5%	3.6×3.5	2.5	2.5	A2	DB
RCE5C1H471J0□□H03□	C0G (EIA)	50Vdc	470pF±5%	3.6×3.5	2.5	5.0	K1	M1
RCE5C1H561J0□□H03□	C0G (EIA)	50Vdc	560pF±5%	3.6×3.5	2.5	2.5	A2	DB
RCE5C1H561J0□□H03□	C0G (EIA)	50Vdc	560pF±5%	3.6×3.5	2.5	5.0	K1	M1
RCE5C1H681J0□□H03□	C0G (EIA)	50Vdc	680pF±5%	3.6×3.5	2.5	2.5	A2	DB
RCE5C1H681J0□□H03□	C0G (EIA)	50Vdc	680pF±5%	3.6×3.5	2.5	5.0	K1	M1
RCE5C1H821J0□□H03□	C0G (EIA)	50Vdc	820pF±5%	3.6×3.5	2.5	2.5	A2	DB
RCE5C1H821J0□□H03□	C0G (EIA)	50Vdc	820pF±5%	3.6×3.5	2.5	5.0	K1	M1
RCE5C1H102J0□□H03□	C0G (EIA)	50Vdc	1000pF±5%	3.6×3.5	2.5	2.5	A2	DB
RCE5C1H102J0□□H03□	C0G (EIA)	50Vdc	1000pF±5%	3.6×3.5	2.5	5.0	K1	M1
RCE5C1H122J0□□H03□	C0G (EIA)	50Vdc	1200pF±5%	3.6×3.5	2.5	2.5	A2	DB
RCE5C1H122J0□□H03□	C0G (EIA)	50Vdc	1200pF±5%	3.6×3.5	2.5	5.0	K1	M1
RCE5C1H152J0□□H03□	C0G (EIA)	50Vdc	1500pF±5%	3.6×3.5	2.5	2.5	A2	DB
RCE5C1H152J0□□H03□	C0G (EIA)	50Vdc	1500pF±5%	3.6×3.5	2.5	5.0	K1	M1

Continued on the following page.

Continued from the preceding page.

Part Number	Temp. Char.	Rated Voltage	Capacitance	Dimensions LxW (mm)	Dimension T (mm)	Lead Space F (mm)	Lead Style Code Bulk	Lead Style Code Taping
RCE5C1H182J0□□H03□	C0G (EIA)	50Vdc	1800pF±5%	3.6×3.5	2.5	2.5	A2	DB
RCE5C1H182J0□□H03□	C0G (EIA)	50Vdc	1800pF±5%	3.6×3.5	2.5	5.0	K1	M1
RCE5C1H222J0□□H03□	C0G (EIA)	50Vdc	2200pF±5%	3.6×3.5	2.5	2.5	A2	DB
RCE5C1H222J0□□H03□	C0G (EIA)	50Vdc	2200pF±5%	3.6×3.5	2.5	5.0	K1	M1
RCE5C1H272J0□□H03□	C0G (EIA)	50Vdc	2700pF±5%	3.6×3.5	2.5	2.5	A2	DB
RCE5C1H272J0□□H03□	C0G (EIA)	50Vdc	2700pF±5%	3.6×3.5	2.5	5.0	K1	M1
RCE5C1H332J0□□H03□	C0G (EIA)	50Vdc	3300pF±5%	3.6×3.5	2.5	2.5	A2	DB
RCE5C1H332J0□□H03□	C0G (EIA)	50Vdc	3300pF±5%	3.6×3.5	2.5	5.0	K1	M1
RCE5C1H392J0□□H03□	C0G (EIA)	50Vdc	3900pF±5%	3.6×3.5	2.5	2.5	A2	DB
RCE5C1H392J0□□H03□	C0G (EIA)	50Vdc	3900pF±5%	3.6×3.5	2.5	5.0	K1	M1
RCE5C1H472J1□□H03□	C0G (EIA)	50Vdc	4700pF±5%	4.0×3.5	2.5	2.5	A2	DB
RCE5C1H472J1□□H03□	C0G (EIA)	50Vdc	4700pF±5%	4.0×3.5	2.5	5.0	K1	M1
RCE5C1H562J1□□H03□	C0G (EIA)	50Vdc	5600pF±5%	4.0×3.5	2.5	2.5	A2	DB
RCE5C1H562J1□□H03□	C0G (EIA)	50Vdc	5600pF±5%	4.0×3.5	2.5	5.0	K1	M1
RCE5C1H682J1□□H03□	C0G (EIA)	50Vdc	6800pF±5%	4.0×3.5	2.5	2.5	A2	DB
RCE5C1H682J1□□H03□	C0G (EIA)	50Vdc	6800pF±5%	4.0×3.5	2.5	5.0	K1	M1
RCE5C1H822J1□□H03□	C0G (EIA)	50Vdc	8200pF±5%	4.0×3.5	2.5	2.5	A2	DB
RCE5C1H822J1□□H03□	C0G (EIA)	50Vdc	8200pF±5%	4.0×3.5	2.5	5.0	K1	M1
RCE5C1H103J1□□H03□	C0G (EIA)	50Vdc	10000pF±5%	4.0×3.5	2.5	2.5	A2	DB
RCE5C1H103J1□□H03□	C0G (EIA)	50Vdc	10000pF±5%	4.0×3.5	2.5	5.0	K1	M1
RCE5C1H123J1□□H03□	C0G (EIA)	50Vdc	12000pF±5%	4.0×3.5	2.5	2.5	A2	DB
RCE5C1H123J1□□H03□	C0G (EIA)	50Vdc	12000pF±5%	4.0×3.5	2.5	5.0	K1	M1
RCE5C1H153J1□□H03□	C0G (EIA)	50Vdc	15000pF±5%	4.0×3.5	2.5	2.5	A2	DB
RCE5C1H153J1□□H03□	C0G (EIA)	50Vdc	15000pF±5%	4.0×3.5	2.5	5.0	K1	M1
RCE5C1H183J1□□H03□	C0G (EIA)	50Vdc	18000pF±5%	4.0×3.5	2.5	2.5	A2	DB
RCE5C1H183J1□□H03□	C0G (EIA)	50Vdc	18000pF±5%	4.0×3.5	2.5	5.0	K1	M1
RCE5C1H223J1□□H03□	C0G (EIA)	50Vdc	22000pF±5%	4.0×3.5	2.5	2.5	A2	DB
RCE5C1H223J1□□H03□	C0G (EIA)	50Vdc	22000pF±5%	4.0×3.5	2.5	5.0	K1	M1
RCE5C2A1R0C0□□H03□	C0G (EIA)	100Vdc	1.0pF±5%	3.6×3.5	2.5	2.5	A2	DB
RCE5C2A1R0C0□□H03□	C0G (EIA)	100Vdc	1.0pF±5%	3.6×3.5	2.5	5.0	K1	M1
RCE5C2A2R0C0□□H03□	C0G (EIA)	100Vdc	2.0pF±5%	3.6×3.5	2.5	2.5	A2	DB
RCE5C2A2R0C0□□H03□	C0G (EIA)	100Vdc	2.0pF±5%	3.6×3.5	2.5	5.0	K1	M1
RCE5C2A3R0C0□□H03□	C0G (EIA)	100Vdc	3.0pF±5%	3.6×3.5	2.5	2.5	A2	DB
RCE5C2A3R0C0□□H03□	C0G (EIA)	100Vdc	3.0pF±5%	3.6×3.5	2.5	5.0	K1	M1
RCE5C2A4R0C0□□H03□	C0G (EIA)	100Vdc	4.0pF±5%	3.6×3.5	2.5	2.5	A2	DB
RCE5C2A4R0C0□□H03□	C0G (EIA)	100Vdc	4.0pF±5%	3.6×3.5	2.5	5.0	K1	M1
RCE5C2A5R0C0□□H03□	C0G (EIA)	100Vdc	5.0pF±5%	3.6×3.5	2.5	2.5	A2	DB
RCE5C2A5R0C0□□H03□	C0G (EIA)	100Vdc	5.0pF±5%	3.6×3.5	2.5	5.0	K1	M1
RCE5C2A6R0D0□□H03□	C0G (EIA)	100Vdc	6.0pF±5%	3.6×3.5	2.5	2.5	A2	DB
RCE5C2A6R0D0□□H03□	C0G (EIA)	100Vdc	6.0pF±5%	3.6×3.5	2.5	5.0	K1	M1
RCE5C2A7R0D0□□H03□	C0G (EIA)	100Vdc	7.0pF±5%	3.6×3.5	2.5	2.5	A2	DB
RCE5C2A7R0D0□□H03□	C0G (EIA)	100Vdc	7.0pF±5%	3.6×3.5	2.5	5.0	K1	M1
RCE5C2A8R0D0□□H03□	C0G (EIA)	100Vdc	8.0pF±5%	3.6×3.5	2.5	2.5	A2	DB
RCE5C2A8R0D0□□H03□	C0G (EIA)	100Vdc	8.0pF±5%	3.6×3.5	2.5	5.0	K1	M1
RCE5C2A9R0D0□□H03□	C0G (EIA)	100Vdc	9.0pF±5%	3.6×3.5	2.5	2.5	A2	DB
RCE5C2A9R0D0□□H03□	C0G (EIA)	100Vdc	9.0pF±5%	3.6×3.5	2.5	5.0	K1	M1
RCE5C2A100J0□□H03□	C0G (EIA)	100Vdc	10pF±5%	3.6×3.5	2.5	2.5	A2	DB
RCE5C2A100J0□□H03□	C0G (EIA)	100Vdc	10pF±5%	3.6×3.5	2.5	5.0	K1	M1
RCE5C2A120J0□□H03□	C0G (EIA)	100Vdc	12pF±5%	3.6×3.5	2.5	2.5	A2	DB
RCE5C2A120J0□□H03□	C0G (EIA)	100Vdc	12pF±5%	3.6×3.5	2.5	5.0	K1	M1
RCE5C2A150J0□□H03□	C0G (EIA)	100Vdc	15pF±5%	3.6×3.5	2.5	2.5	A2	DB
RCE5C2A150J0□□H03□	C0G (EIA)	100Vdc	15pF±5%	3.6×3.5	2.5	5.0	K1	M1
RCE5C2A180J0□□H03□	C0G (EIA)	100Vdc	18pF±5%	3.6×3.5	2.5	2.5	A2	DB
RCE5C2A180J0□□H03□	C0G (EIA)	100Vdc	18pF±5%	3.6×3.5	2.5	5.0	K1	M1
RCE5C2A220J0□□H03□	C0G (EIA)	100Vdc	22pF±5%	3.6×3.5	2.5	2.5	A2	DB
RCE5C2A220J0□□H03□	C0G (EIA)	100Vdc	22pF±5%	3.6×3.5	2.5	5.0	K1	M1
RCE5C2A270J0□□H03□	C0G (EIA)	100Vdc	27pF±5%	3.6×3.5	2.5	2.5	A2	DB

Continued on the following page.

Continued from the preceding page.

Part Number	Temp. Char.	Rated Voltage	Capacitance	Dimensions LxW (mm)	Dimension T (mm)	Lead Space F (mm)	Lead Style Code Bulk	Lead Style Code Taping
RCE5C2A270J0□□H03□	C0G (EIA)	100Vdc	27pF±5%	3.6×3.5	2.5	5.0	K1	M1
RCE5C2A330J0□□H03□	C0G (EIA)	100Vdc	33pF±5%	3.6×3.5	2.5	2.5	A2	DB
RCE5C2A330J0□□H03□	C0G (EIA)	100Vdc	33pF±5%	3.6×3.5	2.5	5.0	K1	M1
RCE5C2A390J0□□H03□	C0G (EIA)	100Vdc	39pF±5%	3.6×3.5	2.5	2.5	A2	DB
RCE5C2A390J0□□H03□	C0G (EIA)	100Vdc	39pF±5%	3.6×3.5	2.5	5.0	K1	M1
RCE5C2A470J0□□H03□	C0G (EIA)	100Vdc	47pF±5%	3.6×3.5	2.5	2.5	A2	DB
RCE5C2A470J0□□H03□	C0G (EIA)	100Vdc	47pF±5%	3.6×3.5	2.5	5.0	K1	M1
RCE5C2A560J0□□H03□	C0G (EIA)	100Vdc	56pF±5%	3.6×3.5	2.5	2.5	A2	DB
RCE5C2A560J0□□H03□	C0G (EIA)	100Vdc	56pF±5%	3.6×3.5	2.5	5.0	K1	M1
RCE5C2A680J0□□H03□	C0G (EIA)	100Vdc	68pF±5%	3.6×3.5	2.5	2.5	A2	DB
RCE5C2A680J0□□H03□	C0G (EIA)	100Vdc	68pF±5%	3.6×3.5	2.5	5.0	K1	M1
RCE5C2A820J0□□H03□	C0G (EIA)	100Vdc	82pF±5%	3.6×3.5	2.5	2.5	A2	DB
RCE5C2A820J0□□H03□	C0G (EIA)	100Vdc	82pF±5%	3.6×3.5	2.5	5.0	K1	M1
RCE5C2A101J0□□H03□	C0G (EIA)	100Vdc	100pF±5%	3.6×3.5	2.5	2.5	A2	DB
RCE5C2A101J0□□H03□	C0G (EIA)	100Vdc	100pF±5%	3.6×3.5	2.5	5.0	K1	M1
RCE5C2A121J0□□H03□	C0G (EIA)	100Vdc	120pF±5%	3.6×3.5	2.5	2.5	A2	DB
RCE5C2A121J0□□H03□	C0G (EIA)	100Vdc	120pF±5%	3.6×3.5	2.5	5.0	K1	M1
RCE5C2A151J0□□H03□	C0G (EIA)	100Vdc	150pF±5%	3.6×3.5	2.5	2.5	A2	DB
RCE5C2A151J0□□H03□	C0G (EIA)	100Vdc	150pF±5%	3.6×3.5	2.5	5.0	K1	M1
RCE5C2A181J0□□H03□	C0G (EIA)	100Vdc	180pF±5%	3.6×3.5	2.5	2.5	A2	DB
RCE5C2A181J0□□H03□	C0G (EIA)	100Vdc	180pF±5%	3.6×3.5	2.5	5.0	K1	M1
RCE5C2A221J0□□H03□	C0G (EIA)	100Vdc	220pF±5%	3.6×3.5	2.5	2.5	A2	DB
RCE5C2A221J0□□H03□	C0G (EIA)	100Vdc	220pF±5%	3.6×3.5	2.5	5.0	K1	M1
RCE5C2A271J0□□H03□	C0G (EIA)	100Vdc	270pF±5%	3.6×3.5	2.5	2.5	A2	DB
RCE5C2A271J0□□H03□	C0G (EIA)	100Vdc	270pF±5%	3.6×3.5	2.5	5.0	K1	M1
RCE5C2A331J0□□H03□	C0G (EIA)	100Vdc	330pF±5%	3.6×3.5	2.5	2.5	A2	DB
RCE5C2A331J0□□H03□	C0G (EIA)	100Vdc	330pF±5%	3.6×3.5	2.5	5.0	K1	M1
RCE5C2A391J0□□H03□	C0G (EIA)	100Vdc	390pF±5%	3.6×3.5	2.5	2.5	A2	DB
RCE5C2A391J0□□H03□	C0G (EIA)	100Vdc	390pF±5%	3.6×3.5	2.5	5.0	K1	M1
RCE5C2A471J0□□H03□	C0G (EIA)	100Vdc	470pF±5%	3.6×3.5	2.5	2.5	A2	DB
RCE5C2A471J0□□H03□	C0G (EIA)	100Vdc	470pF±5%	3.6×3.5	2.5	5.0	K1	M1
RCE5C2A561J0□□H03□	C0G (EIA)	100Vdc	560pF±5%	3.6×3.5	2.5	2.5	A2	DB
RCE5C2A561J0□□H03□	C0G (EIA)	100Vdc	560pF±5%	3.6×3.5	2.5	5.0	K1	M1
RCE5C2A681J0□□H03□	C0G (EIA)	100Vdc	680pF±5%	3.6×3.5	2.5	2.5	A2	DB
RCE5C2A681J0□□H03□	C0G (EIA)	100Vdc	680pF±5%	3.6×3.5	2.5	5.0	K1	M1
RCE5C2A821J0□□H03□	C0G (EIA)	100Vdc	820pF±5%	3.6×3.5	2.5	2.5	A2	DB
RCE5C2A821J0□□H03□	C0G (EIA)	100Vdc	820pF±5%	3.6×3.5	2.5	5.0	K1	M1
RCE5C2A102J0□□H03□	C0G (EIA)	100Vdc	1000pF±5%	3.6×3.5	2.5	2.5	A2	DB
RCE5C2A102J0□□H03□	C0G (EIA)	100Vdc	1000pF±5%	3.6×3.5	2.5	5.0	K1	M1
RCE5C2A122J0□□H03□	C0G (EIA)	100Vdc	1200pF±5%	3.6×3.5	2.5	2.5	A2	DB
RCE5C2A122J0□□H03□	C0G (EIA)	100Vdc	1200pF±5%	3.6×3.5	2.5	5.0	K1	M1
RCE5C2A152J0□□H03□	C0G (EIA)	100Vdc	1500pF±5%	3.6×3.5	2.5	2.5	A2	DB
RCE5C2A152J0□□H03□	C0G (EIA)	100Vdc	1500pF±5%	3.6×3.5	2.5	5.0	K1	M1
RCE5C2A182J1□□H03□	C0G (EIA)	100Vdc	1800pF±5%	4.0×3.5	2.5	2.5	A2	DB
RCE5C2A182J1□□H03□	C0G (EIA)	100Vdc	1800pF±5%	4.0×3.5	2.5	5.0	K1	M1
RCE5C2A222J1□□H03□	C0G (EIA)	100Vdc	2200pF±5%	4.0×3.5	2.5	2.5	A2	DB
RCE5C2A222J1□□H03□	C0G (EIA)	100Vdc	2200pF±5%	4.0×3.5	2.5	5.0	K1	M1
RCE5C2A272J1□□H03□	C0G (EIA)	100Vdc	2700pF±5%	4.0×3.5	2.5	2.5	A2	DB
RCE5C2A272J1□□H03□	C0G (EIA)	100Vdc	2700pF±5%	4.0×3.5	2.5	5.0	K1	M1
RCE5C2A332J1□□H03□	C0G (EIA)	100Vdc	3300pF±5%	4.0×3.5	2.5	2.5	A2	DB
RCE5C2A332J1□□H03□	C0G (EIA)	100Vdc	3300pF±5%	4.0×3.5	2.5	5.0	K1	M1
RCE7U2E101J1□□H03□	U2J (EIA)	250Vdc	100pF±5%	4.0×3.5	3.15	5.0	K1	M1
RCE7U2E151J1□□H03□	U2J (EIA)	250Vdc	150pF±5%	4.0×3.5	3.15	5.0	K1	M1
RCE7U2E221J1□□H03□	U2J (EIA)	250Vdc	220pF±5%	4.0×3.5	3.15	5.0	K1	M1
RCE7U2E331J1□□H03□	U2J (EIA)	250Vdc	330pF±5%	4.0×3.5	3.15	5.0	K1	M1
RCE7U2E471J1□□H03□	U2J (EIA)	250Vdc	470pF±5%	4.0×3.5	3.15	5.0	K1	M1
RCE7U2E681J1□□H03□	U2J (EIA)	250Vdc	680pF±5%	4.0×3.5	3.15	5.0	K1	M1

Continued on the following page.

Continued from the preceding page.

Part Number	Temp. Char.	Rated Voltage	Capacitance	Dimensions LxW (mm)	Dimension T (mm)	Lead Space F (mm)	Lead Style Code Bulk	Lead Style Code Taping
RCE7U2E102J1□□H03□	U2J (EIA)	250Vdc	1000pF±5%	4.0×3.5	3.15	5.0	K1	M1
RCE7U2E152J1□□H03□	U2J (EIA)	250Vdc	1500pF±5%	4.0×3.5	3.15	5.0	K1	M1
RCE7U2E222J1□□H03□	U2J (EIA)	250Vdc	2200pF±5%	4.0×3.5	3.15	5.0	K1	M1
RCE7U2E332J1□□H03□	U2J (EIA)	250Vdc	3300pF±5%	4.0×3.5	3.15	5.0	K1	M1
RCE7U2E472J1□□H03□	U2J (EIA)	250Vdc	4700pF±5%	4.0×3.5	3.15	5.0	K1	M1
RCE7U2E682J2□□H03□	U2J (EIA)	250Vdc	6800pF±5%	5.5×4.0	3.15	5.0	K1	M1
RCE7U2E103J2□□H03□	U2J (EIA)	250Vdc	10000pF±5%	5.5×4.0	3.15	5.0	K1	M1
RCE7U2J100J2□□H03□	U2J (EIA)	630Vdc	10pF±5%	5.5×4.0	3.15	5.0	K1	M1
RCE7U2J150J2□□H03□	U2J (EIA)	630Vdc	15pF±5%	5.5×4.0	3.15	5.0	K1	M1
RCE7U2J220J2□□H03□	U2J (EIA)	630Vdc	22pF±5%	5.5×4.0	3.15	5.0	K1	M1
RCE7U2J330J2□□H03□	U2J (EIA)	630Vdc	33pF±5%	5.5×4.0	3.15	5.0	K1	M1
RCE7U2J470J2□□H03□	U2J (EIA)	630Vdc	47pF±5%	5.5×4.0	3.15	5.0	K1	M1
RCE7U2J680J2□□H03□	U2J (EIA)	630Vdc	68pF±5%	5.5×4.0	3.15	5.0	K1	M1
RCE7U2J101J2□□H03□	U2J (EIA)	630Vdc	100pF±5%	5.5×4.0	3.15	5.0	K1	M1
RCE7U2J151J2□□H03□	U2J (EIA)	630Vdc	150pF±5%	5.5×4.0	3.15	5.0	K1	M1
RCE7U2J221J2□□H03□	U2J (EIA)	630Vdc	220pF±5%	5.5×4.0	3.15	5.0	K1	M1
RCE7U2J331J2□□H03□	U2J (EIA)	630Vdc	330pF±5%	5.5×4.0	3.15	5.0	K1	M1
RCE7U2J471J2□□H03□	U2J (EIA)	630Vdc	470pF±5%	5.5×4.0	3.15	5.0	K1	M1
RCE7U2J681J2□□H03□	U2J (EIA)	630Vdc	680pF±5%	5.5×4.0	3.15	5.0	K1	M1
RCE7U2J102J2□□H03□	U2J (EIA)	630Vdc	1000pF±5%	5.5×4.0	3.15	5.0	K1	M1
RCE7U2J152J2□□H03□	U2J (EIA)	630Vdc	1500pF±5%	5.5×4.0	3.15	5.0	K1	M1
RCE7U2J222J2□□H03□	U2J (EIA)	630Vdc	2200pF±5%	5.5×4.0	3.15	5.0	K1	M1
RCE7U2J332J2□□H03□	U2J (EIA)	630Vdc	3300pF±5%	5.5×4.0	3.15	5.0	K1	M1
RCE7U2J472J2□□H03□	U2J (EIA)	630Vdc	4700pF±5%	5.5×4.0	3.15	5.0	K1	M1
RCE7U2J682J3□□H03□	U2J (EIA)	630Vdc	6800pF±5%	5.5×5.0	4.0	5.0	K1	M1
RCE7U2J103J3□□H03□	U2J (EIA)	630Vdc	10000pF±5%	5.5×5.0	4.0	5.0	K1	M1
RCE7U2J153J4□□H03□	U2J (EIA)	630Vdc	15000pF±5%	7.5×5.5	4.0	5.0	K1	M1
RCE7U2J223J4□□H03□	U2J (EIA)	630Vdc	22000pF±5%	7.5×5.5	4.0	5.0	K1	M1
RCE7U2J333J5□□H03□	U2J (EIA)	630Vdc	33000pF±5%	7.5×8.0	4.0	5.0	B1	E1
RCE7U2J473J5□□H03□	U2J (EIA)	630Vdc	47000pF±5%	7.5×8.0	4.0	5.0	B1	E1
RCE7U2J943JU□□H03□	U2J (EIA)	630Vdc	94000pF±5%	7.7×13.0	4.0	5.0	B1	E1
RCE7U3A100J2□□H03□	U2J (EIA)	1000Vdc	10pF±5%	5.5×4.0	3.15	5.0	K1	M1
RCE7U3A150J2□□H03□	U2J (EIA)	1000Vdc	15pF±5%	5.5×4.0	3.15	5.0	K1	M1
RCE7U3A220J2□□H03□	U2J (EIA)	1000Vdc	22pF±5%	5.5×4.0	3.15	5.0	K1	M1
RCE7U3A330J2□□H03□	U2J (EIA)	1000Vdc	33pF±5%	5.5×4.0	3.15	5.0	K1	M1
RCE7U3A470J2□□H03□	U2J (EIA)	1000Vdc	47pF±5%	5.5×4.0	3.15	5.0	K1	M1
RCE7U3A680J2□□H03□	U2J (EIA)	1000Vdc	68pF±5%	5.5×4.0	3.15	5.0	K1	M1
RCE7U3A101J2□□H03□	U2J (EIA)	1000Vdc	100pF±5%	5.5×4.0	3.15	5.0	K1	M1
RCE7U3A151J2□□H03□	U2J (EIA)	1000Vdc	150pF±5%	5.5×4.0	3.15	5.0	K1	M1
RCE7U3A221J2□□H03□	U2J (EIA)	1000Vdc	220pF±5%	5.5×4.0	3.15	5.0	K1	M1
RCE7U3A331J2□□H03□	U2J (EIA)	1000Vdc	330pF±5%	5.5×4.0	3.15	5.0	K1	M1
RCE7U3A471J2□□H03□	U2J (EIA)	1000Vdc	470pF±5%	5.5×4.0	3.15	5.0	K1	M1
RCE7U3A681J2□□H03□	U2J (EIA)	1000Vdc	680pF±5%	5.5×4.0	3.15	5.0	K1	M1
RCE7U3A102J2□□H03□	U2J (EIA)	1000Vdc	1000pF±5%	5.5×4.0	3.15	5.0	K1	M1
RCE7U3A152J3□□H03□	U2J (EIA)	1000Vdc	1500pF±5%	5.5×5.0	4.0	5.0	K1	M1
RCE7U3A222J3□□H03□	U2J (EIA)	1000Vdc	2200pF±5%	5.5×5.0	4.0	5.0	K1	M1
RCE7U3A332J4□□H03□	U2J (EIA)	1000Vdc	3300pF±5%	7.5×5.5	4.0	5.0	K1	M1
RCE7U3A472J4□□H03□	U2J (EIA)	1000Vdc	4700pF±5%	7.5×5.5	4.0	5.0	K1	M1
RCE7U3A682J5□□H03□	U2J (EIA)	1000Vdc	6800pF±5%	7.5×8.0	4.0	5.0	B1	E1
RCE7U3A103J5□□H03□	U2J (EIA)	1000Vdc	10000pF±5%	7.5×8.0	4.0	5.0	B1	E1
RCE7U3A203JU□□H03□	U2J (EIA)	1000Vdc	20000pF±5%	7.7×13.0	4.0	5.0	B1	E1

Two blank columns are filled with the lead style code. Please refer to the 3 columns on the right for the appropriate code.
The last blank column is filled with the packaging code. (B: bulk, A: ammo pack)

High Dielectric Constant Type, X7R/X7S Characteristics

Part Number	Temp. Char.	Rated Voltage	Capacitance	Dimensions LxW (mm)	Dimension T (mm)	Lead Space F (mm)	Lead Style Code Bulk	Lead Style Code Taping
RCER71E335K2□□H03□	X7R (EIA)	25Vdc	3.3μF±10%	5.5×4.0	3.15	2.5	A2	DB
RCER71E335K2□□H03□	X7R (EIA)	25Vdc	3.3μF±10%	5.5×4.0	3.15	5.0	K1	M1
RCER71E475K2□□H03□	X7R (EIA)	25Vdc	4.7μF±10%	5.5×4.0	3.15	2.5	A2	DB
RCER71E475K2□□H03□	X7R (EIA)	25Vdc	4.7μF±10%	5.5×4.0	3.15	5.0	K1	M1
RCER71E106K3□□H03□	X7R (EIA)	25Vdc	10μF±10%	5.5×5.0	4.0	2.5	A2	DB
RCER71E106K3□□H03□	X7R (EIA)	25Vdc	10μF±10%	5.5×5.0	4.0	5.0	K1	M1
RCER71E226MW□□H03□	X7R (EIA)	25Vdc	22μF±20%	5.5×7.5	4.0	5.0	K1	M1
RCER71H221K0□□H03□	X7R (EIA)	50Vdc	220pF±10%	3.6×3.5	2.5	2.5	A2	DB
RCER71H221K0□□H03□	X7R (EIA)	50Vdc	220pF±10%	3.6×3.5	2.5	5.0	K1	M1
RCER71H331K0□□H03□	X7R (EIA)	50Vdc	330pF±10%	3.6×3.5	2.5	2.5	A2	DB
RCER71H331K0□□H03□	X7R (EIA)	50Vdc	330pF±10%	3.6×3.5	2.5	5.0	K1	M1
RCER71H471K0□□H03□	X7R (EIA)	50Vdc	470pF±10%	3.6×3.5	2.5	2.5	A2	DB
RCER71H471K0□□H03□	X7R (EIA)	50Vdc	470pF±10%	3.6×3.5	2.5	5.0	K1	M1
RCER71H681K0□□H03□	X7R (EIA)	50Vdc	680pF±10%	3.6×3.5	2.5	2.5	A2	DB
RCER71H681K0□□H03□	X7R (EIA)	50Vdc	680pF±10%	3.6×3.5	2.5	5.0	K1	M1
RCER71H102K0□□H03□	X7R (EIA)	50Vdc	1000pF±10%	3.6×3.5	2.5	2.5	A2	DB
RCER71H102K0□□H03□	X7R (EIA)	50Vdc	1000pF±10%	3.6×3.5	2.5	5.0	K1	M1
RCER71H152K0□□H03□	X7R (EIA)	50Vdc	1500pF±10%	3.6×3.5	2.5	2.5	A2	DB
RCER71H152K0□□H03□	X7R (EIA)	50Vdc	1500pF±10%	3.6×3.5	2.5	5.0	K1	M1
RCER71H222K0□□H03□	X7R (EIA)	50Vdc	2200pF±10%	3.6×3.5	2.5	2.5	A2	DB
RCER71H222K0□□H03□	X7R (EIA)	50Vdc	2200pF±10%	3.6×3.5	2.5	5.0	K1	M1
RCER71H332K0□□H03□	X7R (EIA)	50Vdc	3300pF±10%	3.6×3.5	2.5	2.5	A2	DB
RCER71H332K0□□H03□	X7R (EIA)	50Vdc	3300pF±10%	3.6×3.5	2.5	5.0	K1	M1
RCER71H472K0□□H03□	X7R (EIA)	50Vdc	4700pF±10%	3.6×3.5	2.5	2.5	A2	DB
RCER71H472K0□□H03□	X7R (EIA)	50Vdc	4700pF±10%	3.6×3.5	2.5	5.0	K1	M1
RCER71H682K0□□H03□	X7R (EIA)	50Vdc	6800pF±10%	3.6×3.5	2.5	2.5	A2	DB
RCER71H682K0□□H03□	X7R (EIA)	50Vdc	6800pF±10%	3.6×3.5	2.5	5.0	K1	M1
RCER71H103K0□□H03□	X7R (EIA)	50Vdc	10000pF±10%	3.6×3.5	2.5	2.5	A2	DB
RCER71H103K0□□H03□	X7R (EIA)	50Vdc	10000pF±10%	3.6×3.5	2.5	5.0	K1	M1
RCER71H153K0□□H03□	X7R (EIA)	50Vdc	15000pF±10%	3.6×3.5	2.5	2.5	A2	DB
RCER71H153K0□□H03□	X7R (EIA)	50Vdc	15000pF±10%	3.6×3.5	2.5	5.0	K1	M1
RCER71H223K0□□H03□	X7R (EIA)	50Vdc	22000pF±10%	3.6×3.5	2.5	2.5	A2	DB
RCER71H223K0□□H03□	X7R (EIA)	50Vdc	22000pF±10%	3.6×3.5	2.5	5.0	K1	M1
RCER71H333K0□□H03□	X7R (EIA)	50Vdc	33000pF±10%	3.6×3.5	2.5	2.5	A2	DB
RCER71H333K0□□H03□	X7R (EIA)	50Vdc	33000pF±10%	3.6×3.5	2.5	5.0	K1	M1
RCER71H473K0□□H03□	X7R (EIA)	50Vdc	47000pF±10%	3.6×3.5	2.5	2.5	A2	DB
RCER71H473K0□□H03□	X7R (EIA)	50Vdc	47000pF±10%	3.6×3.5	2.5	5.0	K1	M1
RCER71H683K0□□H03□	X7R (EIA)	50Vdc	68000pF±10%	3.6×3.5	2.5	2.5	A2	DB
RCER71H683K0□□H03□	X7R (EIA)	50Vdc	68000pF±10%	3.6×3.5	2.5	5.0	K1	M1
RCER71H104K0□□H03□	X7R (EIA)	50Vdc	0.10μF±10%	3.6×3.5	2.5	2.5	A2	DB
RCER71H104K0□□H03□	X7R (EIA)	50Vdc	0.10μF±10%	3.6×3.5	2.5	5.0	K1	M1
RCER71H154K1□□H03□	X7R (EIA)	50Vdc	0.15μF±10%	4.0×3.5	2.5	2.5	A2	DB
RCER71H154K1□□H03□	X7R (EIA)	50Vdc	0.15μF±10%	4.0×3.5	2.5	5.0	K1	M1
RCER71H224K1□□H03□	X7R (EIA)	50Vdc	0.22μF±10%	4.0×3.5	2.5	2.5	A2	DB
RCER71H224K1□□H03□	X7R (EIA)	50Vdc	0.22μF±10%	4.0×3.5	2.5	5.0	K1	M1
RCER71H334K1□□H03□	X7R (EIA)	50Vdc	0.33μF±10%	4.0×3.5	2.5	2.5	A2	DB
RCER71H334K1□□H03□	X7R (EIA)	50Vdc	0.33μF±10%	4.0×3.5	2.5	5.0	K1	M1
RCER71H474K1□□H03□	X7R (EIA)	50Vdc	0.47μF±10%	4.0×3.5	2.5	2.5	A2	DB
RCER71H474K1□□H03□	X7R (EIA)	50Vdc	0.47μF±10%	4.0×3.5	2.5	5.0	K1	M1
RCER71H684K2□□H03□	X7R (EIA)	50Vdc	0.68μF±10%	5.5×4.0	3.15	2.5	A2	DB
RCER71H684K2□□H03□	X7R (EIA)	50Vdc	0.68μF±10%	5.5×4.0	3.15	5.0	K1	M1
RCER71H105K2□□H03□	X7R (EIA)	50Vdc	1.0μF±10%	5.5×4.0	3.15	2.5	A2	DB
RCER71H105K2□□H03□	X7R (EIA)	50Vdc	1.0μF±10%	5.5×4.0	3.15	5.0	K1	M1
RCER71H155K2□□H03□	X7R (EIA)	50Vdc	1.5μF±10%	5.5×4.0	3.15	2.5	A2	DB
RCER71H155K2□□H03□	X7R (EIA)	50Vdc	1.5μF±10%	5.5×4.0	3.15	5.0	K1	M1

Continued on the following page.

Continued from the preceding page.

Part Number	Temp. Char.	Rated Voltage	Capacitance	Dimensions LxW (mm)	Dimension T (mm)	Lead Space F (mm)	Lead Style Code Bulk	Lead Style Code Taping
RCER71H225K2□□H03□	X7R (EIA)	50Vdc	2.2μF±10%	5.5×4.0	3.15	2.5	A2	DB
RCER71H225K2□□H03□	X7R (EIA)	50Vdc	2.2μF±10%	5.5×4.0	3.15	5.0	K1	M1
RCER71H335K3□□H03□	X7R (EIA)	50Vdc	3.3μF±10%	5.5×5.0	4.0	2.5	A2	DB
RCER71H335K3□□H03□	X7R (EIA)	50Vdc	3.3μF±10%	5.5×5.0	4.0	5.0	K1	M1
RCER71H475K3□□H03□	X7R (EIA)	50Vdc	4.7μF±10%	5.5×5.0	4.0	2.5	A2	DB
RCER71H475K3□□H03□	X7R (EIA)	50Vdc	4.7μF±10%	5.5×5.0	4.0	5.0	K1	M1
RCER71H106MW□□H03□	X7R (EIA)	50Vdc	10μF±20%	5.5×7.5	4.0	5.0	K1	M1
RCER72A221K0□□H03□	X7R (EIA)	100Vdc	220pF±10%	3.6×3.5	2.5	2.5	A2	DB
RCER72A221K0□□H03□	X7R (EIA)	100Vdc	220pF±10%	3.6×3.5	2.5	5.0	K1	M1
RCER72A331K0□□H03□	X7R (EIA)	100Vdc	330pF±10%	3.6×3.5	2.5	2.5	A2	DB
RCER72A331K0□□H03□	X7R (EIA)	100Vdc	330pF±10%	3.6×3.5	2.5	5.0	K1	M1
RCER72A471K0□□H03□	X7R (EIA)	100Vdc	470pF±10%	3.6×3.5	2.5	2.5	A2	DB
RCER72A471K0□□H03□	X7R (EIA)	100Vdc	470pF±10%	3.6×3.5	2.5	5.0	K1	M1
RCER72A681K0□□H03□	X7R (EIA)	100Vdc	680pF±10%	3.6×3.5	2.5	2.5	A2	DB
RCER72A681K0□□H03□	X7R (EIA)	100Vdc	680pF±10%	3.6×3.5	2.5	5.0	K1	M1
RCER72A102K0□□H03□	X7R (EIA)	100Vdc	1000pF±10%	3.6×3.5	2.5	2.5	A2	DB
RCER72A102K0□□H03□	X7R (EIA)	100Vdc	1000pF±10%	3.6×3.5	2.5	5.0	K1	M1
RCER72A152K0□□H03□	X7R (EIA)	100Vdc	1500pF±10%	3.6×3.5	2.5	2.5	A2	DB
RCER72A152K0□□H03□	X7R (EIA)	100Vdc	1500pF±10%	3.6×3.5	2.5	5.0	K1	M1
RCER72A222K0□□H03□	X7R (EIA)	100Vdc	2200pF±10%	3.6×3.5	2.5	2.5	A2	DB
RCER72A222K0□□H03□	X7R (EIA)	100Vdc	2200pF±10%	3.6×3.5	2.5	5.0	K1	M1
RCER72A332K0□□H03□	X7R (EIA)	100Vdc	3300pF±10%	3.6×3.5	2.5	2.5	A2	DB
RCER72A332K0□□H03□	X7R (EIA)	100Vdc	3300pF±10%	3.6×3.5	2.5	5.0	K1	M1
RCER72A472K0□□H03□	X7R (EIA)	100Vdc	4700pF±10%	3.6×3.5	2.5	2.5	A2	DB
RCER72A472K0□□H03□	X7R (EIA)	100Vdc	4700pF±10%	3.6×3.5	2.5	5.0	K1	M1
RCER72A682K0□□H03□	X7R (EIA)	100Vdc	6800pF±10%	3.6×3.5	2.5	2.5	A2	DB
RCER72A682K0□□H03□	X7R (EIA)	100Vdc	6800pF±10%	3.6×3.5	2.5	5.0	K1	M1
RCER72A103K0□□H03□	X7R (EIA)	100Vdc	10000pF±10%	3.6×3.5	2.5	2.5	A2	DB
RCER72A103K0□□H03□	X7R (EIA)	100Vdc	10000pF±10%	3.6×3.5	2.5	5.0	K1	M1
RCER72A153K0□□H03□	X7R (EIA)	100Vdc	15000pF±10%	3.6×3.5	2.5	2.5	A2	DB
RCER72A153K0□□H03□	X7R (EIA)	100Vdc	15000pF±10%	3.6×3.5	2.5	5.0	K1	M1
RCER72A223K0□□H03□	X7R (EIA)	100Vdc	22000pF±10%	3.6×3.5	2.5	2.5	A2	DB
RCER72A223K0□□H03□	X7R (EIA)	100Vdc	22000pF±10%	3.6×3.5	2.5	5.0	K1	M1
RCER72A333K1□□H03□	X7R (EIA)	100Vdc	33000pF±10%	4.0×3.5	2.5	2.5	A2	DB
RCER72A333K1□□H03□	X7R (EIA)	100Vdc	33000pF±10%	4.0×3.5	2.5	5.0	K1	M1
RCER72A473K1□□H03□	X7R (EIA)	100Vdc	47000pF±10%	4.0×3.5	2.5	2.5	A2	DB
RCER72A473K1□□H03□	X7R (EIA)	100Vdc	47000pF±10%	4.0×3.5	2.5	5.0	K1	M1
RCER72A683K1□□H03□	X7R (EIA)	100Vdc	68000pF±10%	4.0×3.5	2.5	2.5	A2	DB
RCER72A683K1□□H03□	X7R (EIA)	100Vdc	68000pF±10%	4.0×3.5	2.5	5.0	K1	M1
RCER72A104K1□□H03□	X7R (EIA)	100Vdc	0.10μF±10%	4.0×3.5	2.5	2.5	A2	DB
RCER72A104K1□□H03□	X7R (EIA)	100Vdc	0.10μF±10%	4.0×3.5	2.5	5.0	K1	M1
RCER72A154K2□□H03□	X7R (EIA)	100Vdc	0.15μF±10%	5.5×4.0	3.15	2.5	A2	DB
RCER72A154K2□□H03□	X7R (EIA)	100Vdc	0.15μF±10%	5.5×4.0	3.15	5.0	K1	M1
RCER72A224K2□□H03□	X7R (EIA)	100Vdc	0.22μF±10%	5.5×4.0	3.15	2.5	A2	DB
RCER72A224K2□□H03□	X7R (EIA)	100Vdc	0.22μF±10%	5.5×4.0	3.15	5.0	K1	M1
RCER72A334K1□□H03□	X7R (EIA)	100Vdc	0.33μF±10%	4.0×3.5	2.5	2.5	A2	DB
RCER72A334K1□□H03□	X7R (EIA)	100Vdc	0.33μF±10%	4.0×3.5	2.5	5.0	K1	M1
RCER72A474K2□□H03□	X7R (EIA)	100Vdc	0.47μF±10%	5.5×4.0	3.15	2.5	A2	DB
RCER72A474K2□□H03□	X7R (EIA)	100Vdc	0.47μF±10%	5.5×4.0	3.15	5.0	K1	M1
RCER72A684K2□□H03□	X7R (EIA)	100Vdc	0.68μF±10%	5.5×4.0	3.15	2.5	A2	DB
RCER72A684K2□□H03□	X7R (EIA)	100Vdc	0.68μF±10%	5.5×4.0	3.15	5.0	K1	M1
RCER72A105K2□□H03□	X7R (EIA)	100Vdc	1.0μF±10%	5.5×4.0	3.15	2.5	A2	DB
RCER72A105K2□□H03□	X7R (EIA)	100Vdc	1.0μF±10%	5.5×4.0	3.15	5.0	K1	M1
RCEC72A155K3□□H03□	X7S (EIA)	100Vdc	1.5μF±10%	5.5×5.0	4.0	2.5	A2	DB
RCEC72A155K3□□H03□	X7S (EIA)	100Vdc	1.5μF±10%	5.5×5.0	4.0	5.0	K1	M1
RCEC72A225K3□□H03□	X7S (EIA)	100Vdc	2.2μF±10%	5.5×5.0	4.0	2.5	A2	DB
RCEC72A225K3□□H03□	X7S (EIA)	100Vdc	2.2μF±10%	5.5×5.0	4.0	5.0	K1	M1

Continued on the following page.

Continued from the preceding page.

Part Number	Temp. Char.	Rated Voltage	Capacitance	Dimensions LxW (mm)	Dimension T (mm)	Lead Space F (mm)	Lead Style Code Bulk	Lead Style Code Taping
RCEC72A475MW□□H03□	X7S (EIA)	100Vdc	4.7μF±20%	5.5×7.5	4.0	5.0	K1	M1
RCER72E102K1□□H03□	X7R (EIA)	250Vdc	1000pF±10%	4.0×3.5	3.15	5.0	K1	M1
RCER72E152K1□□H03□	X7R (EIA)	250Vdc	1500pF±10%	4.0×3.5	3.15	5.0	K1	M1
RCER72E222K1□□H03□	X7R (EIA)	250Vdc	2200pF±10%	4.0×3.5	3.15	5.0	K1	M1
RCER72E332K1□□H03□	X7R (EIA)	250Vdc	3300pF±10%	4.0×3.5	3.15	5.0	K1	M1
RCER72E472K1□□H03□	X7R (EIA)	250Vdc	4700pF±10%	4.0×3.5	3.15	5.0	K1	M1
RCER72E682K1□□H03□	X7R (EIA)	250Vdc	6800pF±10%	4.0×3.5	3.15	5.0	K1	M1
RCER72E103K1□□H03□	X7R (EIA)	250Vdc	10000pF±10%	4.0×3.5	3.15	5.0	K1	M1
RCER72E153K1□□H03□	X7R (EIA)	250Vdc	15000pF±10%	4.0×3.5	3.15	5.0	K1	M1
RCER72E223K1□□H03□	X7R (EIA)	250Vdc	22000pF±10%	4.0×3.5	3.15	5.0	K1	M1
RCER72E333K2□□H03□	X7R (EIA)	250Vdc	33000pF±10%	5.5×4.0	3.15	5.0	K1	M1
RCER72E473K2□□H03□	X7R (EIA)	250Vdc	47000pF±10%	5.5×4.0	3.15	5.0	K1	M1
RCER72E683K2□□H03□	X7R (EIA)	250Vdc	68000pF±10%	5.5×4.0	3.15	5.0	K1	M1
RCER72E104K2□□H03□	X7R (EIA)	250Vdc	0.10μF±10%	5.5×4.0	3.15	5.0	K1	M1
RCER72E154K3□□H03□	X7R (EIA)	250Vdc	0.15μF±10%	5.5×5.0	4.0	5.0	K1	M1
RCER72E224K3□□H03□	X7R (EIA)	250Vdc	0.22μF±10%	5.5×5.0	4.0	5.0	K1	M1
RCER72E334K4□□H03□	X7R (EIA)	250Vdc	0.33μF±10%	7.5×5.5	4.0	5.0	K1	M1
RCER72E474K4□□H03□	X7R (EIA)	250Vdc	0.47μF±10%	7.5×5.5	4.0	5.0	K1	M1
RCER72E684K5□□H03□	X7R (EIA)	250Vdc	0.68μF±10%	7.5×7.5	4.0	5.0	B1	E1
RCER72E105K5□□H03□	X7R (EIA)	250Vdc	1.0μF±10%	7.5×7.5	4.0	5.0	B1	E1
RCER72E225MU□□H03□	X7R (EIA)	250Vdc	2.2μF±20%	7.5×12.5	4.0	5.0	B1	E1
RCER72J102K2□□H03□	X7R (EIA)	630Vdc	1000pF±10%	5.5×4.0	3.15	5.0	K1	M1
RCER72J152K2□□H03□	X7R (EIA)	630Vdc	1500pF±10%	5.5×4.0	3.15	5.0	K1	M1
RCER72J222K2□□H03□	X7R (EIA)	630Vdc	2200pF±10%	5.5×4.0	3.15	5.0	K1	M1
RCER72J332K2□□H03□	X7R (EIA)	630Vdc	3300pF±10%	5.5×4.0	3.15	5.0	K1	M1
RCER72J472K2□□H03□	X7R (EIA)	630Vdc	4700pF±10%	5.5×4.0	3.15	5.0	K1	M1
RCER72J682K2□□H03□	X7R (EIA)	630Vdc	6800pF±10%	5.5×4.0	3.15	5.0	K1	M1
RCER72J103K2□□H03□	X7R (EIA)	630Vdc	10000pF±10%	5.5×4.0	3.15	5.0	K1	M1
RCER72J153K2□□H03□	X7R (EIA)	630Vdc	15000pF±10%	5.5×4.0	3.15	5.0	K1	M1
RCER72J223K2□□H03□	X7R (EIA)	630Vdc	22000pF±10%	5.5×4.0	3.15	5.0	K1	M1
RCER72J333K3□□H03□	X7R (EIA)	630Vdc	33000pF±10%	5.5×5.0	4.0	5.0	K1	M1
RCER72J473K3□□H03□	X7R (EIA)	630Vdc	47000pF±10%	5.5×5.0	4.0	5.0	K1	M1
RCER72J683K4□□H03□	X7R (EIA)	630Vdc	68000pF±10%	7.5×5.5	4.0	5.0	K1	M1
RCER72J104K4□□H03□	X7R (EIA)	630Vdc	0.10μF±10%	7.5×5.5	4.0	5.0	K1	M1
RCER72J154K5□□H03□	X7R (EIA)	630Vdc	0.15μF±10%	7.5×8.0	4.0	5.0	B1	E1
RCER72J224K5□□H03□	X7R (EIA)	630Vdc	0.22μF±10%	7.5×8.0	4.0	5.0	B1	E1
RCER72J474MU□□H03□	X7R (EIA)	630Vdc	0.47μF±20%	7.7×13.0	4.0	5.0	B1	E1
RCER73A102K2□□H03□	X7R (EIA)	1000Vdc	1000pF±10%	5.5×4.0	3.15	5.0	K1	M1
RCER73A152K2□□H03□	X7R (EIA)	1000Vdc	1500pF±10%	5.5×4.0	3.15	5.0	K1	M1
RCER73A222K2□□H03□	X7R (EIA)	1000Vdc	2200pF±10%	5.5×4.0	3.15	5.0	K1	M1
RCER73A332K2□□H03□	X7R (EIA)	1000Vdc	3300pF±10%	5.5×4.0	3.15	5.0	K1	M1
RCER73A472K2□□H03□	X7R (EIA)	1000Vdc	4700pF±10%	5.5×4.0	3.15	5.0	K1	M1
RCER73A682K2□□H03□	X7R (EIA)	1000Vdc	6800pF±10%	5.5×4.0	3.15	5.0	K1	M1
RCER73A103K2□□H03□	X7R (EIA)	1000Vdc	10000pF±10%	5.5×4.0	3.15	5.0	K1	M1
RCER73A153K3□□H03□	X7R (EIA)	1000Vdc	15000pF±10%	5.5×5.0	4.0	5.0	K1	M1
RCER73A223K3□□H03□	X7R (EIA)	1000Vdc	22000pF±10%	5.5×5.0	4.0	5.0	K1	M1
RCER73A333K4□□H03□	X7R (EIA)	1000Vdc	33000pF±10%	7.5×5.5	4.0	5.0	K1	M1
RCER73A473K4□□H03□	X7R (EIA)	1000Vdc	47000pF±10%	7.5×5.5	4.0	5.0	K1	M1
RCER73A683K5□□H03□	X7R (EIA)	1000Vdc	68000pF±10%	7.5×8.0	4.0	5.0	B1	E1
RCER73A104K5□□H03□	X7R (EIA)	1000Vdc	0.10μF±10%	7.5×8.0	4.0	5.0	B1	E1
RCER73A224MU□□H03□	X7R (EIA)	1000Vdc	0.22μF±20%	7.7×13.0	4.0	5.0	B1	E1

Two blank columns are filled with the lead style code. Please refer to the 3 columns on the right for the appropriate code.
The last blank column is filled with the packaging code. (B: bulk, A: ammo pack)

Temperature Compensating Type Specifications and Test Methods

No.	AEC-Q200 Test Item		Specifications	AEC-Q200 Test Method
1	Pre-and Post-Stress Electrical Test		–	
2	High Temperature Exposure (Storage)		The measured and observed characteristics should satisfy the specifications in the following table.	Sit the capacitor for 1,000±12h at 150±3°C. Let sit for 24±2h at room temperature, then measure.
		Appearance	No defects or abnormalities	
		Capacitance Change	Within ±3% or ±0.3pF (Whichever is larger)	
		Q	30pF ≦ C: Q ≧ 350 10pF ≦ C < 30pF: Q ≧ 275+5C/2 10pF > C: Q ≧ 200+10C C: Nominal Capacitance (pF)	
		I.R.	More than 1,000MΩ or 50MΩ · μF (Whichever is smaller)	
3	Temperature Cycling		The measured and observed characteristics should satisfy the specifications in the following table.	Perform the 1,000 cycles according to the four heat treatments listed in the following table. Let sit for 24±2h at *room condition, then measure.
		Appearance	No defects or abnormalities	
		Capacitance Change	Within ±5% or ±0.5pF (Whichever is larger)	
		Q	30pF ≦ C: Q ≧ 350 10pF ≦ C < 30pF: Q ≧ 275+5C/2 10pF > C: Q ≧ 200+10C C: Nominal Capacitance (pF)	
		I.R.	1,000MΩ or 50MΩ · μF min. (Whichever is smaller)	
4	Moisture Resistance		The measured and observed characteristics should satisfy the specifications in the following table.	Apply the 24h heat (25 to 65°C) and humidity (80 to 98%) treatment shown below, 10 consecutive times. Let sit for 24±2h at *room condition, then measure.
		Appearance	No defects or abnormalities	
		Capacitance Change	Within ±5% or ±0.5pF (Whichever is larger)	
		Q	30pF ≦ C: Q ≧ 200 30pF > C: Q ≧ 100+10C/3 C: Nominal Capacitance (pF)	
		I.R.	500MΩ or 25MΩ · μF min. (Whichever is smaller)	
5	Biased Humidity		The measured and observed characteristics should satisfy the specifications in the following table.	Apply the rated voltage and DC1.3+0.2/-0V (add 6.8kΩ resistor) at 85±3°C and 80 to 85% humidity for 1,000±12h. Remove and let sit for 24±2h at *room condition, then measure. The charge/discharge current is less than 50mA.
		Appearance	No defects or abnormalities	
		Capacitance Change	Within ±5% or ±0.5pF (Whichever is larger)	
		Q	30pF ≦ C: Q ≧ 200 30pF > C: Q ≧ 100+10C/3 C: Nominal Capacitance (pF)	
		I.R.	500MΩ or 25MΩ · μF min. (Whichever is smaller)	
6	Operational Life		The measured and observed characteristics should satisfy the specifications in the following table.	Apply the voltage shown in the table for 1,000±12h at 125±3°C. Let sit for 24±2h at *room condition, then measure. The charge/discharge current is less than 50mA.
		Appearance	No defects or abnormalities	
		Capacitance Change	Within ±3% or ±0.3pF (Whichever is larger)	
		Q	30pF ≦ C: Q ≧ 350 10pF ≦ C < 30pF: Q ≧ 275+5C/2 10pF > C: Q ≧ 200+10C C: Nominal Capacitance (pF)	
		I.R.	1,000MΩ or 50MΩ · μF min. (Whichever is smaller)	

Step	1	2	3	4
Temp. (°C)	-55+0/-3	Room Temp.	125+3/-0	Room Temp.
Time (min.)	15±3	1	15±3	1

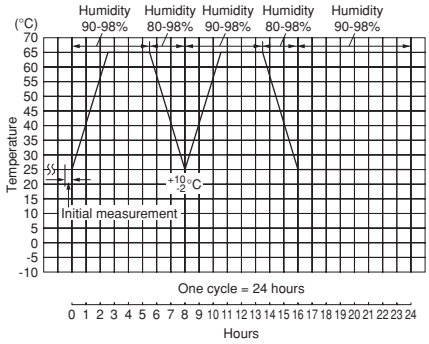

Rated Voltage	Test Voltage
DC50V, DC100V	200% of the rated voltage
DC250V	150% of the rated voltage
DC630V, DC1kV	120% of the rated voltage

* "room condition" Temperature: 15 to 35°C, Relative humidity: 45 to 75%, Atmosphere pressure: 86 to 106kPa

Continued on the following page.

Temperature Compensating Type Specifications and Test Methods

Continued from the preceding page.

No.	AEC-Q200 Test Item		Specifications	AEC-Q200 Test Method
7	External Visual		No defects or abnormalities	Visual inspection
8	Physical Dimension		Within the specified dimensions	Using calipers and micrometers.
9	Marking		To be easily legible.	Visual inspection
10	Resistance to Solvents	Appearance	No defects or abnormalities	Per MIL-STD-202 Method 215 Solvent 1: 1 part (by volume) of isopropyl alcohol 3 parts (by volume) of mineral spirits Solvent 2: Terpene defluxer Solvent 3: 42 parts (by volume) of water 1 part (by volume) of propylene glycol monomethyl ether 1 part (by volume) of monoethanolamine
		Capacitance	Within the specified tolerance	
		Q	30pF ≦ C: Q ≧ 1,000 30pF > C: Q ≧ 400+20C C: Nominal Capacitance (pF)	
		I.R.	More than 10,000MΩ or 500MΩ · μF (Whichever is smaller)	
11	Mechanical Shock	Appearance	No defects or abnormalities	Three shocks in each direction should be applied along 3 mutually perpendicular axes of the test specimen (18 shocks). The specified test pulse should be Half-sine and should have a duration: 0.5ms, peak value: 1,500G and velocity change: 4.7m/s.
		Capacitance	Within the specified tolerance	
		Q	30pF ≦ C : Q ≧ 1,000 30pF > C : Q ≧ 400+20C C : Nominal Capacitance (pF)	
12	Vibration	Appearance	No defects or abnormalities	The capacitor should be subjected to a simple harmonic motion having a total amplitude of 1.5mm, the frequency being varied uniformly between the approximate limits of 10 and 2,000Hz. The frequency range, from 10 to 2,000Hz and return to 10Hz, should be traversed in approximately 20min. This motion should be applied for 12 items in each 3 mutually perpendicular directions (total of 36 times).
		Capacitance	Within the specified tolerance	
		Q	30pF ≦ C: Q ≧ 1,000 30pF > C: Q ≧ 400+20C C: Nominal Capacitance (pF)	
13	Resistance to Soldering Heat		The measured and observed characteristics should satisfy the specifications in the following table.	The lead wire is immersed in the melted solder 1.5 to 2mm from the main body at 260±5°C for 10±1s. The specified items are measured after 24±2h.
		Appearance	No defects or abnormalities	
		Capacitance Change	Within ±2.5% or ±0.25pF (Whichever is larger)	
		Dielectric Strength (Between Terminals)	No defects	
14	Thermal Shock		The measured and observed characteristics should satisfy the specifications in the following table.	Perform the 300 cycles according to the two heat treatments listed in the following table (Maximum transfer time is 20s.). Let sit for 24±2h at *room condition, then measure. Step: 1 — Temp. (°C): -55+0/-3 — Time (min.): 15±3 Step: 2 — Temp. (°C): 125+3/-0 — Time (min.): 15±3
		Appearance	No defects or abnormalities	
		Capacitance Change	Within ±5% or ±0.5pF (Whichever is larger)	
		Q	30pF ≦ C: Q ≧ 350 10pF ≦ C < 30p: Q ≧ 275+5C/2 10pF > C: Q ≧ 200+10C C: Nominal Capacitance (pF)	
		I.R.	1,000MΩ or 50MΩ · μF min. (Whichever is smaller)	
15	ESD	Appearance	No defects or abnormalities	Per AEC-Q200-004
		Capacitance	Within the specified tolerance	
		Q	30pF ≦ C: Q ≧ 1,000 30pF > C: Q ≧ 400+20C C: Nominal Capacitance (pF)	
		I.R.	More than 10,000MΩ or 500MΩ · μF (Whichever is smaller)	
16	Solderability		Lead wire should be soldered with uniform coating on the axial direction over 95% of the circumferential direction.	Should be placed into steam aging for 8h±15min. The terminal of capacitor is dipped into a solution of ethanol (JIS K 8101) and rosin (JIS K 5902) (25% rosin in weight propotion). Immerse in solder solution for 2±0.5 seconds. In both cases the depth of dipping is up to about 1.5 to 2mm from the terminal body.

* "room condition" Temperature: 15 to 35°C, Relative humidity: 45 to 75%, Atmosphere pressure: 86 to 106kPa

Continued on the following page.

Temperature Compensating Type Specifications and Test Methods

Continued from the preceding page.

No.	AEC-Q200 Test Item		Specifications		AEC-Q200 Test Method
17	Electrical Charac-terization	Appearance	No defects or abnormalities		Visual inspection.
		Capacitance	Within the specified tolerance		The capacitance, Q should be measured at 25°C at the frequency and voltage shown in the table. Nominal Cap. / Frequency / Voltage C ≦ 1000pF / 1±0.1MHz / AC0.5 to 5V (r.m.s.) C > 1000pF / 1±0.1kHz / AC1±0.2V (r.m.s.)
		Q	30pF ≦ C: Q ≧ 1,000 30pF > C: Q ≧ 400+20C C: Nominal Capacitance (pF)		
		I.R.	Between Terminals	10,000MΩ or 500MΩ · μF min. (Whichever is smaller)	The insulation resistance should be measured with a DC voltage not exceeding the rated voltage at 25°C within 2min. of charging.
		Dielectric Strength	Between Terminals	No defects or abnormalities	The capacitor should not be damaged when DC voltage shown in the table is applied between the terminations for 1 to 5 seconds. (Charge/Discharge current ≦ 50mA.) Rated Voltage / Test Voltage DC50V, DC100V / 300% of the rated voltage DC250V / 200% of the rated voltage DC630V / 150% of the rated voltage DC1kV / 130% of the rated voltage
			Body Insulation	No defects or abnormalities	The capacitor is placed in a container with metal balls of 1mm diameter so that each terminal, short-circuit is kept approximately 2mm from the balls, and 250% of the rated DC voltage is impressed for 1 to 5 seconds between capacitor terminals and metal balls. (Charge/Discharge current ≦ 50mA.)
18	Terminal Strength	Tensile Strength	Termination not to be broken or loosened		As in the figure, fix the capacitor body, apply the force gradually to each lead in the radial direction of the capacitor until reaching 10N and then keep the force applied for 10±1 seconds. 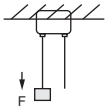
		Bending Strength	Termination not to be broken or loosened		Each lead wire should be subjected to a force of 2.5N and then be bent 90° at the point of egress in one direction. Each wire is then returned to the original position and bent 90° in the opposite direction at the rate of one bend per 2 to 3 seconds.
19	Capacitance Temperature Characteristics		Within the specified Tolerance. (Table A) Capacitance Drift is within ±0.2% or ±0.05pF (Whichever is larger)		The capacitance change should be measured after 5min. at each specified temperature step. Step / Temperature (°C) 1 / 25±2 2 / -55±3 3 / 25±2 4 / 125±3 5 / 25±2 The temperature coefficient is determind using the capacitance measured in step 3 as a reference. When cycling the temperature sequentially from step 1 through 5 (-55°C to +125°C) the capacitance should be within the specified tolerance for the temperature coefficient and capacitance change as Table A. The capacitance drift is caluculated by dividing the differences betweeen the maximum and minimum measured values in the step 1, 3 and 5 by the capacitance value in step 3.

* "room condition" Temperature: 15 to 35°C, Relative humidity: 45 to 75%, Atmosphere pressure: 86 to 106kPa

Table A

Char.	Nominal Values (ppm/°C) *	Capacitance Change from 25°C (%)					
		-55		-30		-10	
		Max.	Min.	Max.	Min.	Max.	Min.
C0G	0±30	0.58	-0.24	0.40	-0.17	0.25	-0.11
U2J	-750±120	8.78	5.04	6.04	3.47	3.84	2.21

* Nominal values denote the temperature coefficient within a range of 25°C to 125°C.

High Dielectric Constant Type Specifications and Test Methods

No.	AEC-Q200 Test Item		Specifications	AEC-Q200 Test Method
1	Pre-and Post-Stress Electrical Test		–	
2	High Temperature Exposure (Storage)		The measured and observed characteristics should satisfy the specifications in the following table.	Sit the capacitor for 1,000±12h at 150±3°C. Let sit for 24±2h at room temperature, then measure.
		Appearance	No defects or abnormalities	
		Capacitance Change	Within ±12.5%	
		D.F.	0.04 max.	
		I.R.	More than 1,000MΩ or 50MΩ · μF (Whichever is smaller)	
3	Temperature Cycling		The measured and observed characteristics should satisfy the specifications in the following table.	Perform the 1,000 cycles according to the four heat treatments listed in the following table. Let sit for 24±2h at *room condition, then measure.
		Appearance	No defects or abnormalities	
		Capacitance Change	Within ±12.5%	
		D.F.	0.05 max.	
		I.R.	1,000MΩ or 50MΩ · μF min. (Whichever is smaller)	
4	Moisture Resistance		The measured and observed characteristics should satisfy the specifications in the following table.	Apply the 24h heat (25 to 65°C) and humidity (80 to 98%) treatment shown below, 10 consecutive times. Let sit for 24±2h at *room condition, then measure.
		Appearance	No defects or abnormalities	
		Capacitance Change	Within ±12.5%	
		D.F.	0.05 max.	
		I.R.	500MΩ or 25MΩ · μF min. (Whichever is smaller)	
5	Biased Humidity		The measured and observed characteristics should satisfy the specifications in the following table.	Apply the rated voltage and DC1.3+0.2/-0V (add 6.8kΩ resistor) at 85±3°C and 80 to 85% humidity for 1,000±12h. Remove and let sit for 24±2h at *room condition, then measure. The charge/discharge current is less than 50mA.
		Appearance	No defects or abnormalities	
		Capacitance Change	Within ±12.5%	
		D.F.	0.05 max.	
		I.R.	500MΩ or 25MΩ · μF min. (Whichever is smaller)	
6	Operational Life		The measured and observed characteristics should satisfy the specifications in the following table.	Apply the voltage shown in the table for 1,000±12h at 125±3°C. Let sit for 24±2h at *room condition, then measure. The charge/discharge current is less than 50mA.
		Appearance	No defects or abnormalities	
		Capacitance Change	Within ±12.5%	
		D.F.	0.04 max.	
		I.R.	1,000MΩ or 50MΩ · μF min. (Whichever is smaller)	
7	External Visual		No defects or abnormalities	Visual inspection
8	Physical Dimension		Within the specified dimensions	Using calipers and micrometers.
9	Marking		To be easily legible.	Visual inspection

Step	1	2	3	4
Temp. (°C)	-55+0/-3	Room Temp.	125+3/-0	Room Temp.
Time (min.)	15±3	1	15±3	1

•Pretreatment
Perform the heat treatment at 150+0/-10°C for 60±5min and then let sit for 24±2h at *room condition.

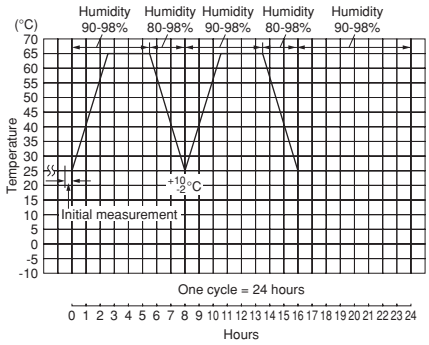

•Pretreatment
Apply test voltage for 60±5min at test temperature.
Remove and let sit for 24±2h at *room condition.

Rated Voltage	Test Voltage
DC25V, DC50V, DC100V	200% of the rated voltage *1
DC250V	150% of the rated voltage
DC630V	120% of the rated voltage
DC1kV	110% of the rated voltage

* "room condition" Temperature: 15 to 35°C, Relative humidity: 45 to 75%, Atmosphere pressure: 86 to 106kPa
*1: below parts are applicable in rated voltage×150%.

Char.	Rated Voltage	Capacitance	Dimensions
R7	2A	334	1
R7	2A	474-105	2
C7	2A	155-225	3
C7	2A	475	W

Continued on the following page.

High Dielectric Constant Type Specifications and Test Methods

Continued from the preceding page.

No.	AEC-Q200 Test Item		Specifications	AEC-Q200 Test Method
10	Resistance to Solvents	Appearance	No defects or abnormalities	Per MIL-STD-202 Method 215 Solvent 1: 1 part (by volume) of isopropyl alcohol 3 parts (by volume) of mineral spirits Solvent 2: Terpene defluxer Solvent 3: 42 parts (by volume) of water 1 part (by volume) of propylene glycol monomethyl ether 1 part (by volume) of monoethanolamine
		Capacitance	Within the specified tolerance	
		D.F.	0.025 max.	
		I.R.	More than 10,000MΩ or 500MΩ · μF (Whichever is smaller)	
11	Mechanical Shock	Appearance	No defects or abnormalities	Three shocks in each direction should be applied along 3 mutually perpendicular axes of the test specimen (18 shocks). The specified test pulse should be Half-sine and should have a duration: 0.5ms, peak value: 1,500G and velocity change: 4.7m/s.
		Capacitance	Within the specified tolerance	
		D.F.	0.025 max.	
12	Vibration	Appearance	No defects or abnormalities	The capacitor should be subjected to a simple harmonic motion having a total amplitude of 1.5mm, the frequency being varied uniformly between the approximate limits of 10 and 2,000Hz. The frequency range, from 10 to 2,000Hz and return to 10Hz, should be traversed in approximately 20min. This motion should be applied for 12 items in each 3 mutually perpendicular directions (total of 36 times).
		Capacitance	Within the specified tolerance	
		D.F.	0.025 max.	
13	Resistance to Soldering Heat		The measured and observed characteristics should satisfy the specifications in the following table.	The lead wire is immersed in the melted solder 1.5 to 2mm from the main body at 260±5°C for 10±1s. The specified items are measured after 24±2h. •Pretreatment Perform the heat treatment at 150+0/-10°C for 60±5min and then let sit for 24±2h at *room condition.
		Appearance	No defects or abnormalities	
		Capacitance Change	Wthin ±7.5%	
		Dielectric Strength (Between terminals)	No defects	
14	Thermal Shock		The measured and observed characteristics should satisfy the specifications in the following table.	Perform the 300 cycles according to the two heat treatments listed in the following table (Maximum transfer time is 20s.). Let sit for 24±2h at *room condition, then measure. Step 1: Temp. (°C) -55+0/-3, Time (min.) 15±3 Step 2: Temp. (°C) 125+3/-0, Time (min.) 15±3 •Pretreatment Perform the heat treatment at 150+0/-10°C for 60±5min and then let sit for 24±2h at *room condition.
		Appearance	No defects or abnormalities	
		Capacitance Change	Within ±12.5%	
		D.F.	0.05 max.	
		I.R.	1,000MΩ or 50MΩ · μF min. (Whichever is smaller)	
15	ESD	Appearance	No defects or abnormalities	Per AEC-Q200-004
		Capacitance	Within the specified tolerance	
		D.F.	0.025 max.	
		I.R.	More than 10,000MΩ or 500MΩ · μF (Whichever is smaller)	
16	Solderability		Lead wire should be soldered with uniform coating on the axial direction over 95% of the circumferential direction.	Should be placed into steam aging for 8h±15min. The terminal of capacitor is dipped into a solution of ethanol (JIS K 8101) and rosin (JIS K 5902) (25% rosin in weight propotion). Immerse in solder solution for 2±0.5 seconds. In both cases the depth of dipping is up to about 1.5 to 2mm from the terminal body.

* "room condition" Temperature: 15 to 35°C, Relative humidity: 45 to 75%, Atmosphere pressure: 86 to 106kPa

Continued on the following page.

High Dielectric Constant Type Specifications and Test Methods

Continued from the preceding page.

No.	AEC-Q200 Test Item		Specifications		AEC-Q200 Test Method
17	Electrical Charac-terization	Appearance	No defects or abnormalities		Visual inspection.
		Capacitance	Within the specified tolerance		The capacitance/D.F. should be measured at 25°C at the frequency and voltage shown in the table. Frequency: 1±0.1kHz Voltage: 1±0.2V (r.m.s.)
		D.F.	0.025 max.		
		I.R.	Between Terminals	10,000MΩ or 500MΩ · μF min. (Whichever is smaller)	The insulation resistance should be measured with a DC voltage not exceeding the rated voltage at 25°C within 2min. of charging.
		Dielectric Strength	Between Terminals	No defects or abnormalities	The capacitor should not be damaged when DC voltage shown in the table is applied between the terminations for 1 to 5 seconds. (Charge/Discharge current ≦ 50mA.) Rated Voltage / Test Voltage: DC25V, DC50V, DC100V: 250% of the rated voltage DC250V: 200% of the rated voltage DC630V: 150% of the rated voltage DC1kV: 120% of the rated voltage
			Body Insulation	No defects or abnormalities	The capacitor is placed in a container with metal balls of 1mm diameter so that each terminal, short-circuit is kept approximately 2mm from the balls, and 250% of the rated DC voltage is impressed for 1 to 5 seconds between capacitor terminals and metal balls. (Charge/Discharge current ≦ 50mA.)
18	Terminal Strength	Tensile Strength	Termination not to be broken or loosened		As in the figure, fix the capacitor body, apply the force gradually to each lead in the radial direction of the capacitor until reaching 10N and then keep the force applied for 10±1 seconds. 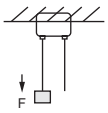
		Bending Strength	Termination not to be broken or loosened		Each lead wire should be subjected to a force of 2.5N and then be bent 90° at the point of egress in one direction. Each wire is then returned to the original position and bent 90° in the opposite direction at the rate of one bend per 2 to 3 seconds.
19	Capacitance Temperature Characteristics		Char.X7R: Within ±15% Char.X7S: Within ±22%		The capacitance change should be measured after 5min. at each specified temperature step. Step / Temperature (°C): 1: 25±2 2: -55±3 3: 25±2 4: 125±3 5: 25±2 The ranges of capacitance change compared with the above 25°C value over the temperature ranges shown in the table should be within the specified ranges. •Pretreatment Perform the heat treatment at 150+0/-10°C for 60±5min and then let sit for 24±2h at *room condition. Perform the initial measurement.

* "room condition" Temperature: 15 to 35°C, Relative humidity: 45 to 75%, Atmosphere pressure: 86 to 106kPa

Radial Lead Type Monolithic Ceramic Capacitors

muRata

RHE Series 150°C max. (for Automotive) (DC50V-DC100V)

■ Features

1. Small size and large capacitance
2. Low ESR and ESL suitable for high frequency
3. Applied maximum temperature up to 150°C
   Note : Maximum accumulative time to 150°C
   is within 2000 hours.
4. Meet AEC-Q200, ISO7637-2 (surge test) requirement
5. Meet LF (Lead Free) and HF (Halogen Free)
6. Flow soldering and welding are available.
   (Re-flow soldering is not available.)
7. If copper wire is necessary at welding process,
   copper wire is available based on request.

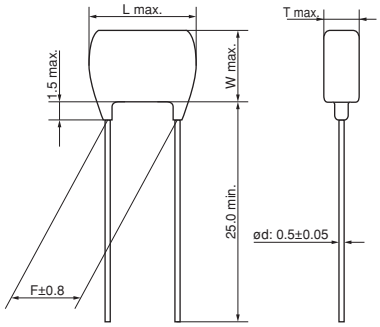

Dimensions code: 0
Lead style code: A2

· Lead Wire: Solder Coated CP Wire

(in mm)

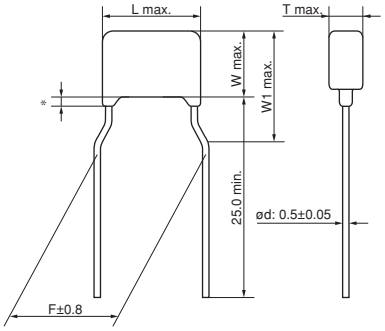

Dimensions code: 0
Lead style code: K1

∗ Coating extension does not exceed the end of the lead bend.
· Lead Wire: Solder Coated CP Wire

(in mm)

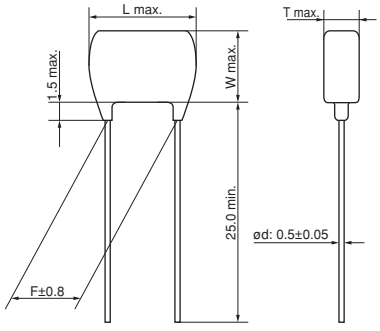

Dimensions code: 1
Lead style code: A2

· Lead Wire: Solder Coated CP Wire

(in mm)

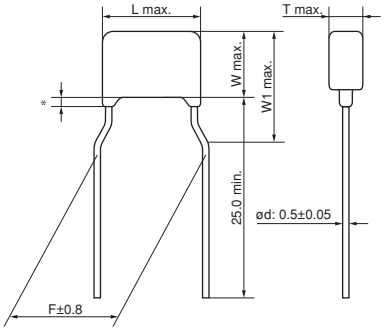

Dimensions code: 1
Lead style code: K1

∗ Coating extension does not exceed the end of the lead bend.
· Lead Wire: Solder Coated CP Wire

(in mm)

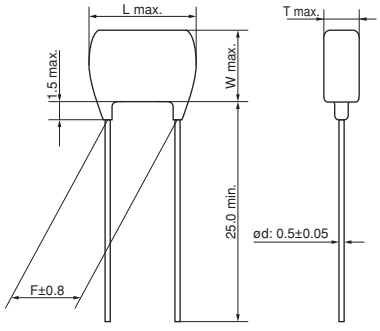

Dimensions code: 2
Lead style code: A2

· Lead Wire: Solder Coated CP Wire

(in mm)

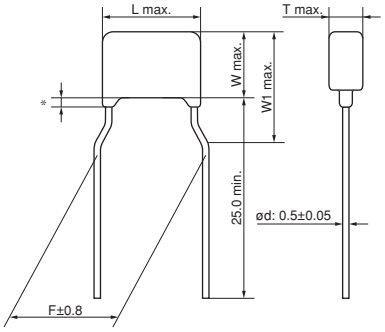

Dimensions code: 2
Lead style code: K1

∗ Coating extension does not exceed the end of the lead bend.
· Lead Wire: Solder Coated CP Wire

(in mm)

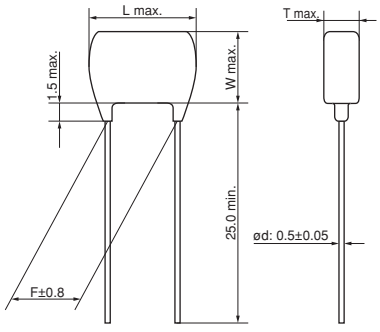

Dimensions code: 3
Lead style code: A2

· Lead Wire: Solder Coated CP Wire

(in mm)

Continued on the following page. ↗

Continued from the preceding page.

Dimensions code: 3
Lead style code: K1

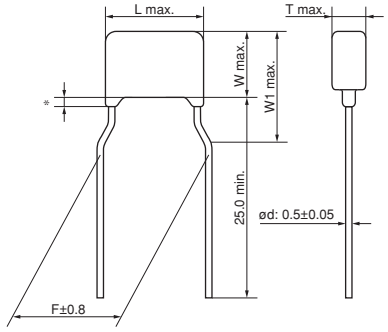

* Coating extension does not exceed the end of the lead bend.
· Lead Wire: Solder Coated CP Wire

(in mm)

Dimensions code: W
Lead style code: K1

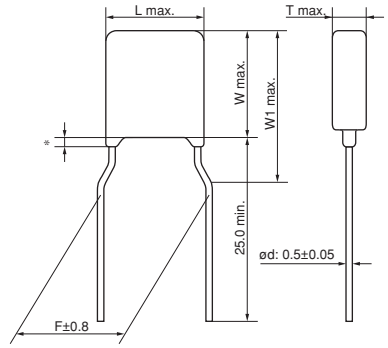

* Coating extension does not exceed the end of the lead bend.
· Lead Wire: Solder Coated CP Wire

(in mm)

■ Dimensions

Dimensions and Lead Style Code	Dimensions (mm)					
	L	W	W1	T	F	d
0A2/0DB	3.6	3.5	-	See the individual product specification	2.5	0.5
0K1/0M1	3.6	3.5	6.0		5.0	0.5
1A2/1DB	4.0	3.5	-		2.5	0.5
1K1/1M1	4.0	3.5	5.0		5.0	0.5
2A2/2DB	5.5	4.0	-		2.5	0.5
2K1/2M1	5.5	4.0	6.0		5.0	0.5
3A2/3DB	5.5	5.0	-		2.5	0.5
3K1/3M1	5.5	5.0	7.5		5.0	0.5
WK1/WM1	5.5	7.5	10.0		5.0	0.5

■ Marking

Dimensions Code \ Type	Temperature Compensating Type	High Dielectric Constant Type	
Rated Voltage	DC50V, DC100V	DC50V	DC100V
Temp. Char.	X8G	X8L	
0	8 102J	8 104K	8 103K
1			
2	—	Ⓜ 105 K58	Ⓜ 224 K18
3, W	—	Ⓜ 335 K58	—
Temperature Characteristics	Marked with code (X8G, X8L char.: 8)		
Nominal Capacitance	Marked with 3 figures		
Capacitance Tolerance	Marked with code		
Rated Voltage	Marked with code (DC50V: 5, DC100V: 1) A part is omitted (Please refer to the marking example.)		
Manufacturer's Identification	Marked with Ⓜ A part is omitted (Please refer to the marking example.)		

Temperature Compensating Type, X8G Characteristics

Part Number	Temp. Char.	Rated Voltage	Capacitance	Dimensions LxW (mm)	Dimension T (mm)	Lead Space F (mm)	Lead Style Code Bulk	Lead Style Code Taping
RHE5G1H101J0□□H03□	X8G (Murata)	50Vdc	100pF±5%	3.6×3.5	2.5	2.5	A2	DB
RHE5G1H101J0□□H03□	X8G (Murata)	50Vdc	100pF±5%	3.6×3.5	2.5	5.0	K1	M1
RHE5G1H121J0□□H03□	X8G (Murata)	50Vdc	120pF±5%	3.6×3.5	2.5	2.5	A2	DB
RHE5G1H121J0□□H03□	X8G (Murata)	50Vdc	120pF±5%	3.6×3.5	2.5	5.0	K1	M1
RHE5G1H151J0□□H03□	X8G (Murata)	50Vdc	150pF±5%	3.6×3.5	2.5	2.5	A2	DB
RHE5G1H151J0□□H03□	X8G (Murata)	50Vdc	150pF±5%	3.6×3.5	2.5	5.0	K1	M1
RHE5G1H181J0□□H03□	X8G (Murata)	50Vdc	180pF±5%	3.6×3.5	2.5	2.5	A2	DB
RHE5G1H181J0□□H03□	X8G (Murata)	50Vdc	180pF±5%	3.6×3.5	2.5	5.0	K1	M1
RHE5G1H221J0□□H03□	X8G (Murata)	50Vdc	220pF±5%	3.6×3.5	2.5	2.5	A2	DB
RHE5G1H221J0□□H03□	X8G (Murata)	50Vdc	220pF±5%	3.6×3.5	2.5	5.0	K1	M1
RHE5G1H271J0□□H03□	X8G (Murata)	50Vdc	270pF±5%	3.6×3.5	2.5	2.5	A2	DB
RHE5G1H271J0□□H03□	X8G (Murata)	50Vdc	270pF±5%	3.6×3.5	2.5	5.0	K1	M1
RHE5G1H331J0□□H03□	X8G (Murata)	50Vdc	330pF±5%	3.6×3.5	2.5	2.5	A2	DB
RHE5G1H331J0□□H03□	X8G (Murata)	50Vdc	330pF±5%	3.6×3.5	2.5	5.0	K1	M1
RHE5G1H391J0□□H03□	X8G (Murata)	50Vdc	390pF±5%	3.6×3.5	2.5	2.5	A2	DB
RHE5G1H391J0□□H03□	X8G (Murata)	50Vdc	390pF±5%	3.6×3.5	2.5	5.0	K1	M1
RHE5G1H471J0□□H03□	X8G (Murata)	50Vdc	470pF±5%	3.6×3.5	2.5	2.5	A2	DB
RHE5G1H471J0□□H03□	X8G (Murata)	50Vdc	470pF±5%	3.6×3.5	2.5	5.0	K1	M1
RHE5G1H561J0□□H03□	X8G (Murata)	50Vdc	560pF±5%	3.6×3.5	2.5	2.5	A2	DB
RHE5G1H561J0□□H03□	X8G (Murata)	50Vdc	560pF±5%	3.6×3.5	2.5	5.0	K1	M1
RHE5G1H681J0□□H03□	X8G (Murata)	50Vdc	680pF±5%	3.6×3.5	2.5	2.5	A2	DB
RHE5G1H681J0□□H03□	X8G (Murata)	50Vdc	680pF±5%	3.6×3.5	2.5	5.0	K1	M1
RHE5G1H821J0□□H03□	X8G (Murata)	50Vdc	820pF±5%	3.6×3.5	2.5	2.5	A2	DB
RHE5G1H821J0□□H03□	X8G (Murata)	50Vdc	820pF±5%	3.6×3.5	2.5	5.0	K1	M1
RHE5G1H102J0□□H03□	X8G (Murata)	50Vdc	1000pF±5%	3.6×3.5	2.5	2.5	A2	DB
RHE5G1H102J0□□H03□	X8G (Murata)	50Vdc	1000pF±5%	3.6×3.5	2.5	5.0	K1	M1
RHE5G1H122J0□□H03□	X8G (Murata)	50Vdc	1200pF±5%	3.6×3.5	2.5	2.5	A2	DB
RHE5G1H122J0□□H03□	X8G (Murata)	50Vdc	1200pF±5%	3.6×3.5	2.5	5.0	K1	M1
RHE5G1H152J0□□H03□	X8G (Murata)	50Vdc	1500pF±5%	3.6×3.5	2.5	2.5	A2	DB
RHE5G1H152J0□□H03□	X8G (Murata)	50Vdc	1500pF±5%	3.6×3.5	2.5	5.0	K1	M1
RHE5G1H182J0□□H03□	X8G (Murata)	50Vdc	1800pF±5%	3.6×3.5	2.5	2.5	A2	DB
RHE5G1H182J0□□H03□	X8G (Murata)	50Vdc	1800pF±5%	3.6×3.5	2.5	5.0	K1	M1
RHE5G1H222J0□□H03□	X8G (Murata)	50Vdc	2200pF±5%	3.6×3.5	2.5	2.5	A2	DB
RHE5G1H222J0□□H03□	X8G (Murata)	50Vdc	2200pF±5%	3.6×3.5	2.5	5.0	K1	M1
RHE5G1H272J0□□H03□	X8G (Murata)	50Vdc	2700pF±5%	3.6×3.5	2.5	2.5	A2	DB
RHE5G1H272J0□□H03□	X8G (Murata)	50Vdc	2700pF±5%	3.6×3.5	2.5	5.0	K1	M1
RHE5G1H332J0□□H03□	X8G (Murata)	50Vdc	3300pF±5%	3.6×3.5	2.5	2.5	A2	DB
RHE5G1H332J0□□H03□	X8G (Murata)	50Vdc	3300pF±5%	3.6×3.5	2.5	5.0	K1	M1
RHE5G1H392J0□□H03□	X8G (Murata)	50Vdc	3900pF±5%	3.6×3.5	2.5	2.5	A2	DB
RHE5G1H392J0□□H03□	X8G (Murata)	50Vdc	3900pF±5%	3.6×3.5	2.5	5.0	K1	M1
RHE5G1H472J1□□H03□	X8G (Murata)	50Vdc	4700pF±5%	4.0×3.5	2.5	2.5	A2	DB
RHE5G1H472J1□□H03□	X8G (Murata)	50Vdc	4700pF±5%	4.0×3.5	2.5	5.0	K1	M1
RHE5G1H562J1□□H03□	X8G (Murata)	50Vdc	5600pF±5%	4.0×3.5	2.5	2.5	A2	DB
RHE5G1H562J1□□H03□	X8G (Murata)	50Vdc	5600pF±5%	4.0×3.5	2.5	5.0	K1	M1
RHE5G1H682J1□□H03□	X8G (Murata)	50Vdc	6800pF±5%	4.0×3.5	2.5	2.5	A2	DB
RHE5G1H682J1□□H03□	X8G (Murata)	50Vdc	6800pF±5%	4.0×3.5	2.5	5.0	K1	M1
RHE5G1H822J1□□H03□	X8G (Murata)	50Vdc	8200pF±5%	4.0×3.5	2.5	2.5	A2	DB
RHE5G1H822J1□□H03□	X8G (Murata)	50Vdc	8200pF±5%	4.0×3.5	2.5	5.0	K1	M1
RHE5G1H103J1□□H03□	X8G (Murata)	50Vdc	10000pF±5%	4.0×3.5	2.5	2.5	A2	DB
RHE5G1H103J1□□H03□	X8G (Murata)	50Vdc	10000pF±5%	4.0×3.5	2.5	5.0	K1	M1
RHE5G2A101J0□□H03□	X8G (Murata)	100Vdc	100pF±5%	3.6×3.5	2.5	2.5	A2	DB
RHE5G2A101J0□□H03□	X8G (Murata)	100Vdc	100pF±5%	3.6×3.5	2.5	5.0	K1	M1
RHE5G2A121J0□□H03□	X8G (Murata)	100Vdc	120pF±5%	3.6×3.5	2.5	2.5	A2	DB
RHE5G2A121J0□□H03□	X8G (Murata)	100Vdc	120pF±5%	3.6×3.5	2.5	5.0	K1	M1
RHE5G2A151J0□□H03□	X8G (Murata)	100Vdc	150pF±5%	3.6×3.5	2.5	2.5	A2	DB

Continued on the following page.

Continued from the preceding page.

Part Number	Temp. Char.	Rated Voltage	Capacitance	Dimensions LxW (mm)	Dimension T (mm)	Lead Space F (mm)	Lead Style Code Bulk	Lead Style Code Taping
RHE5G2A151J0□□H03□	X8G (Murata)	100Vdc	150pF±5%	3.6×3.5	2.5	5.0	K1	M1
RHE5G2A181J0□□H03□	X8G (Murata)	100Vdc	180pF±5%	3.6×3.5	2.5	2.5	A2	DB
RHE5G2A181J0□□H03□	X8G (Murata)	100Vdc	180pF±5%	3.6×3.5	2.5	5.0	K1	M1
RHE5G2A221J0□□H03□	X8G (Murata)	100Vdc	220pF±5%	3.6×3.5	2.5	2.5	A2	DB
RHE5G2A221J0□□H03□	X8G (Murata)	100Vdc	220pF±5%	3.6×3.5	2.5	5.0	K1	M1
RHE5G2A271J0□□H03□	X8G (Murata)	100Vdc	270pF±5%	3.6×3.5	2.5	2.5	A2	DB
RHE5G2A271J0□□H03□	X8G (Murata)	100Vdc	270pF±5%	3.6×3.5	2.5	5.0	K1	M1
RHE5G2A331J0□□H03□	X8G (Murata)	100Vdc	330pF±5%	3.6×3.5	2.5	2.5	A2	DB
RHE5G2A331J0□□H03□	X8G (Murata)	100Vdc	330pF±5%	3.6×3.5	2.5	5.0	K1	M1
RHE5G2A391J0□□H03□	X8G (Murata)	100Vdc	390pF±5%	3.6×3.5	2.5	2.5	A2	DB
RHE5G2A391J0□□H03□	X8G (Murata)	100Vdc	390pF±5%	3.6×3.5	2.5	5.0	K1	M1
RHE5G2A471J0□□H03□	X8G (Murata)	100Vdc	470pF±5%	3.6×3.5	2.5	2.5	A2	DB
RHE5G2A471J0□□H03□	X8G (Murata)	100Vdc	470pF±5%	3.6×3.5	2.5	5.0	K1	M1
RHE5G2A561J0□□H03□	X8G (Murata)	100Vdc	560pF±5%	3.6×3.5	2.5	2.5	A2	DB
RHE5G2A561J0□□H03□	X8G (Murata)	100Vdc	560pF±5%	3.6×3.5	2.5	5.0	K1	M1
RHE5G2A681J0□□H03□	X8G (Murata)	100Vdc	680pF±5%	3.6×3.5	2.5	2.5	A2	DB
RHE5G2A681J0□□H03□	X8G (Murata)	100Vdc	680pF±5%	3.6×3.5	2.5	5.0	K1	M1
RHE5G2A821J0□□H03□	X8G (Murata)	100Vdc	820pF±5%	3.6×3.5	2.5	2.5	A2	DB
RHE5G2A821J0□□H03□	X8G (Murata)	100Vdc	820pF±5%	3.6×3.5	2.5	5.0	K1	M1
RHE5G2A102J0□□H03□	X8G (Murata)	100Vdc	1000pF±5%	3.6×3.5	2.5	2.5	A2	DB
RHE5G2A102J0□□H03□	X8G (Murata)	100Vdc	1000pF±5%	3.6×3.5	2.5	5.0	K1	M1
RHE5G2A122J0□□H03□	X8G (Murata)	100Vdc	1200pF±5%	3.6×3.5	2.5	2.5	A2	DB
RHE5G2A122J0□□H03□	X8G (Murata)	100Vdc	1200pF±5%	3.6×3.5	2.5	5.0	K1	M1
RHE5G2A152J0□□H03□	X8G (Murata)	100Vdc	1500pF±5%	3.6×3.5	2.5	2.5	A2	DB
RHE5G2A152J0□□H03□	X8G (Murata)	100Vdc	1500pF±5%	3.6×3.5	2.5	5.0	K1	M1
RHE5G2A182J1□□H03□	X8G (Murata)	100Vdc	1800pF±5%	4.0×3.5	2.5	2.5	A2	DB
RHE5G2A182J1□□H03□	X8G (Murata)	100Vdc	1800pF±5%	4.0×3.5	2.5	5.0	K1	M1
RHE5G2A222J1□□H03□	X8G (Murata)	100Vdc	2200pF±5%	4.0×3.5	2.5	2.5	A2	DB
RHE5G2A222J1□□H03□	X8G (Murata)	100Vdc	2200pF±5%	4.0×3.5	2.5	5.0	K1	M1
RHE5G2A272J1□□H03□	X8G (Murata)	100Vdc	2700pF±5%	4.0×3.5	2.5	2.5	A2	DB
RHE5G2A272J1□□H03□	X8G (Murata)	100Vdc	2700pF±5%	4.0×3.5	2.5	5.0	K1	M1
RHE5G2A332J1□□H03□	X8G (Murata)	100Vdc	3300pF±5%	4.0×3.5	2.5	2.5	A2	DB
RHE5G2A332J1□□H03□	X8G (Murata)	100Vdc	3300pF±5%	4.0×3.5	2.5	5.0	K1	M1

Two blank columns are filled with the lead style code. Please refer to the 3 columns on the right for the appropriate code.
The last blank column is filled with the packaging code. (B: bulk, A: ammo pack)

High Dielectric Constant Type, X8L Characteristics

Part Number	Temp. Char.	Rated Voltage	Capacitance	Dimensions LxW (mm)	Dimension T (mm)	Lead Space F (mm)	Lead Style Code Bulk	Lead Style Code Taping
RHEL81H221K0□□H03□	X8L (Murata)	50Vdc	220pF±10%	3.6×3.5	2.5	2.5	A2	DB
RHEL81H221K0□□H03□	X8L (Murata)	50Vdc	220pF±10%	3.6×3.5	2.5	5.0	K1	M1
RHEL81H331K0□□H03□	X8L (Murata)	50Vdc	330pF±10%	3.6×3.5	2.5	2.5	A2	DB
RHEL81H331K0□□H03□	X8L (Murata)	50Vdc	330pF±10%	3.6×3.5	2.5	5.0	K1	M1
RHEL81H471K0□□H03□	X8L (Murata)	50Vdc	470pF±10%	3.6×3.5	2.5	2.5	A2	DB
RHEL81H471K0□□H03□	X8L (Murata)	50Vdc	470pF±10%	3.6×3.5	2.5	5.0	K1	M1
RHEL81H681K0□□H03□	X8L (Murata)	50Vdc	680pF±10%	3.6×3.5	2.5	2.5	A2	DB
RHEL81H681K0□□H03□	X8L (Murata)	50Vdc	680pF±10%	3.6×3.5	2.5	5.0	K1	M1
RHEL81H102K0□□H03□	X8L (Murata)	50Vdc	1000pF±10%	3.6×3.5	2.5	2.5	A2	DB
RHEL81H102K0□□H03□	X8L (Murata)	50Vdc	1000pF±10%	3.6×3.5	2.5	5.0	K1	M1
RHEL81H152K0□□H03□	X8L (Murata)	50Vdc	1500pF±10%	3.6×3.5	2.5	2.5	A2	DB
RHEL81H152K0□□H03□	X8L (Murata)	50Vdc	1500pF±10%	3.6×3.5	2.5	5.0	K1	M1
RHEL81H222K0□□H03□	X8L (Murata)	50Vdc	2200pF±10%	3.6×3.5	2.5	2.5	A2	DB
RHEL81H222K0□□H03□	X8L (Murata)	50Vdc	2200pF±10%	3.6×3.5	2.5	5.0	K1	M1
RHEL81H332K0□□H03□	X8L (Murata)	50Vdc	3300pF±10%	3.6×3.5	2.5	2.5	A2	DB
RHEL81H332K0□□H03□	X8L (Murata)	50Vdc	3300pF±10%	3.6×3.5	2.5	5.0	K1	M1

Continued on the following page.

Continued from the preceding page.

2

Part Number	Temp. Char.	Rated Voltage	Capacitance	Dimensions LxW (mm)	Dimension T (mm)	Lead Space F (mm)	Lead Style Code Bulk	Lead Style Code Taping
RHEL81H472K0□□H03□	X8L (Murata)	50Vdc	4700pF±10%	3.6×3.5	2.5	2.5	A2	DB
RHEL81H472K0□□H03□	X8L (Murata)	50Vdc	4700pF±10%	3.6×3.5	2.5	5.0	K1	M1
RHEL81H682K0□□H03□	X8L (Murata)	50Vdc	6800pF±10%	3.6×3.5	2.5	2.5	A2	DB
RHEL81H682K0□□H03□	X8L (Murata)	50Vdc	6800pF±10%	3.6×3.5	2.5	5.0	K1	M1
RHEL81H103K0□□H03□	X8L (Murata)	50Vdc	10000pF±10%	3.6×3.5	2.5	2.5	A2	DB
RHEL81H103K0□□H03□	X8L (Murata)	50Vdc	10000pF±10%	3.6×3.5	2.5	5.0	K1	M1
RHEL81H153K0□□H03□	X8L (Murata)	50Vdc	15000pF±10%	3.6×3.5	2.5	2.5	A2	DB
RHEL81H153K0□□H03□	X8L (Murata)	50Vdc	15000pF±10%	3.6×3.5	2.5	5.0	K1	M1
RHEL81H223K0□□H03□	X8L (Murata)	50Vdc	22000pF±10%	3.6×3.5	2.5	2.5	A2	DB
RHEL81H223K0□□H03□	X8L (Murata)	50Vdc	22000pF±10%	3.6×3.5	2.5	5.0	K1	M1
RHEL81H333K0□□H03□	X8L (Murata)	50Vdc	33000pF±10%	3.6×3.5	2.5	2.5	A2	DB
RHEL81H333K0□□H03□	X8L (Murata)	50Vdc	33000pF±10%	3.6×3.5	2.5	5.0	K1	M1
RHEL81H473K0□□H03□	X8L (Murata)	50Vdc	47000pF±10%	3.6×3.5	2.5	2.5	A2	DB
RHEL81H473K0□□H03□	X8L (Murata)	50Vdc	47000pF±10%	3.6×3.5	2.5	5.0	K1	M1
RHEL81H683K0□□H03□	X8L (Murata)	50Vdc	68000pF±10%	3.6×3.5	2.5	2.5	A2	DB
RHEL81H683K0□□H03□	X8L (Murata)	50Vdc	68000pF±10%	3.6×3.5	2.5	5.0	K1	M1
RHEL81H104K0□□H03□	X8L (Murata)	50Vdc	0.10μF±10%	3.6×3.5	2.5	2.5	A2	DB
RHEL81H104K0□□H03□	X8L (Murata)	50Vdc	0.10μF±10%	3.6×3.5	2.5	5.0	K1	M1
RHEL81H154K1□□H03□	X8L (Murata)	50Vdc	0.15μF±10%	4.0×3.5	2.5	2.5	A2	DB
RHEL81H154K1□□H03□	X8L (Murata)	50Vdc	0.15μF±10%	4.0×3.5	2.5	5.0	K1	M1
RHEL81H224K1□□H03□	X8L (Murata)	50Vdc	0.22μF±10%	4.0×3.5	2.5	2.5	A2	DB
RHEL81H224K1□□H03□	X8L (Murata)	50Vdc	0.22μF±10%	4.0×3.5	2.5	5.0	K1	M1
RHEL81H334K1□□H03□	X8L (Murata)	50Vdc	0.33μF±10%	4.0×3.5	2.5	2.5	A2	DB
RHEL81H334K1□□H03□	X8L (Murata)	50Vdc	0.33μF±10%	4.0×3.5	2.5	5.0	K1	M1
RHEL81H474K2□□H03□	X8L (Murata)	50Vdc	0.47μF±10%	5.5×4.0	3.15	2.5	A2	DB
RHEL81H474K2□□H03□	X8L (Murata)	50Vdc	0.47μF±10%	5.5×4.0	3.15	5.0	K1	M1
RHEL81H684K2□□H03□	X8L (Murata)	50Vdc	0.68μF±10%	5.5×4.0	3.15	2.5	A2	DB
RHEL81H684K2□□H03□	X8L (Murata)	50Vdc	0.68μF±10%	5.5×4.0	3.15	5.0	K1	M1
RHEL81H105K2□□H03□	X8L (Murata)	50Vdc	1.0μF±10%	5.5×4.0	3.15	2.5	A2	DB
RHEL81H105K2□□H03□	X8L (Murata)	50Vdc	1.0μF±10%	5.5×4.0	3.15	5.0	K1	M1
RHEL81H155K2□□H03□	X8L (Murata)	50Vdc	1.5μF±10%	5.5×4.0	3.15	2.5	A2	DB
RHEL81H155K2□□H03□	X8L (Murata)	50Vdc	1.5μF±10%	5.5×4.0	3.15	5.0	K1	M1
RHEL81H225K2□□H03□	X8L (Murata)	50Vdc	2.2μF±10%	5.5×4.0	3.15	2.5	A2	DB
RHEL81H225K2□□H03□	X8L (Murata)	50Vdc	2.2μF±10%	5.5×4.0	3.15	5.0	K1	M1
RHEL81H335K3□□H03□	X8L (Murata)	50Vdc	3.3μF±10%	5.5×5.0	4.0	2.5	A2	DB
RHEL81H335K3□□H03□	X8L (Murata)	50Vdc	3.3μF±10%	5.5×5.0	4.0	5.0	K1	M1
RHEL81H475K3□□H03□	X8L (Murata)	50Vdc	4.7μF±10%	5.5×5.0	4.0	2.5	A2	DB
RHEL81H475K3□□H03□	X8L (Murata)	50Vdc	4.7μF±10%	5.5×5.0	4.0	5.0	K1	M1
RHEL81H106MW□□H03□	X8L (Murata)	50Vdc	10μF±20%	5.5×7.5	4.0	5.0	K1	M1
RHEL82A221K0□□H03□	X8L (Murata)	100Vdc	220pF±10%	3.6×3.5	2.5	2.5	A2	DB
RHEL82A221K0□□H03□	X8L (Murata)	100Vdc	220pF±10%	3.6×3.5	2.5	5.0	K1	M1
RHEL82A331K0□□H03□	X8L (Murata)	100Vdc	330pF±10%	3.6×3.5	2.5	2.5	A2	DB
RHEL82A331K0□□H03□	X8L (Murata)	100Vdc	330pF±10%	3.6×3.5	2.5	5.0	K1	M1
RHEL82A471K0□□H03□	X8L (Murata)	100Vdc	470pF±10%	3.6×3.5	2.5	2.5	A2	DB
RHEL82A471K0□□H03□	X8L (Murata)	100Vdc	470pF±10%	3.6×3.5	2.5	5.0	K1	M1
RHEL82A681K0□□H03□	X8L (Murata)	100Vdc	680pF±10%	3.6×3.5	2.5	2.5	A2	DB
RHEL82A681K0□□H03□	X8L (Murata)	100Vdc	680pF±10%	3.6×3.5	2.5	5.0	K1	M1
RHEL82A102K0□□H03□	X8L (Murata)	100Vdc	1000pF±10%	3.6×3.5	2.5	2.5	A2	DB
RHEL82A102K0□□H03□	X8L (Murata)	100Vdc	1000pF±10%	3.6×3.5	2.5	5.0	K1	M1
RHEL82A152K0□□H03□	X8L (Murata)	100Vdc	1500pF±10%	3.6×3.5	2.5	2.5	A2	DB
RHEL82A152K0□□H03□	X8L (Murata)	100Vdc	1500pF±10%	3.6×3.5	2.5	5.0	K1	M1
RHEL82A222K0□□H03□	X8L (Murata)	100Vdc	2200pF±10%	3.6×3.5	2.5	2.5	A2	DB
RHEL82A222K0□□H03□	X8L (Murata)	100Vdc	2200pF±10%	3.6×3.5	2.5	5.0	K1	M1
RHEL82A332K0□□H03□	X8L (Murata)	100Vdc	3300pF±10%	3.6×3.5	2.5	2.5	A2	DB
RHEL82A332K0□□H03□	X8L (Murata)	100Vdc	3300pF±10%	3.6×3.5	2.5	5.0	K1	M1
RHEL82A472K0□□H03□	X8L (Murata)	100Vdc	4700pF±10%	3.6×3.5	2.5	2.5	A2	DB
RHEL82A472K0□□H03□	X8L (Murata)	100Vdc	4700pF±10%	3.6×3.5	2.5	5.0	K1	M1

Continued on the following page.

Continued from the preceding page.

Part Number	Temp. Char.	Rated Voltage	Capacitance	Dimensions LxW (mm)	Dimension T (mm)	Lead Space F (mm)	Lead Style Code Bulk	Lead Style Code Taping
RHEL82A682K0□□H03□	X8L (Murata)	100Vdc	6800pF±10%	3.6×3.5	2.5	2.5	A2	DB
RHEL82A682K0□□H03□	X8L (Murata)	100Vdc	6800pF±10%	3.6×3.5	2.5	5.0	K1	M1
RHEL82A103K0□□H03□	X8L (Murata)	100Vdc	10000pF±10%	3.6×3.5	2.5	2.5	A2	DB
RHEL82A103K0□□H03□	X8L (Murata)	100Vdc	10000pF±10%	3.6×3.5	2.5	5.0	K1	M1
RHEL82A153K0□□H03□	X8L (Murata)	100Vdc	15000pF±10%	3.6×3.5	2.5	2.5	A2	DB
RHEL82A153K0□□H03□	X8L (Murata)	100Vdc	15000pF±10%	3.6×3.5	2.5	5.0	K1	M1
RHEL82A223K0□□H03□	X8L (Murata)	100Vdc	22000pF±10%	3.6×3.5	2.5	2.5	A2	DB
RHEL82A223K0□□H03□	X8L (Murata)	100Vdc	22000pF±10%	3.6×3.5	2.5	5.0	K1	M1
RHEL82A333K1□□H03□	X8L (Murata)	100Vdc	33000pF±10%	4.0×3.5	2.5	2.5	A2	DB
RHEL82A333K1□□H03□	X8L (Murata)	100Vdc	33000pF±10%	4.0×3.5	2.5	5.0	K1	M1
RHEL82A473K1□□H03□	X8L (Murata)	100Vdc	47000pF±10%	4.0×3.5	2.5	2.5	A2	DB
RHEL82A473K1□□H03□	X8L (Murata)	100Vdc	47000pF±10%	4.0×3.5	2.5	5.0	K1	M1
RHEL82A683K1□□H03□	X8L (Murata)	100Vdc	68000pF±10%	4.0×3.5	2.5	2.5	A2	DB
RHEL82A683K1□□H03□	X8L (Murata)	100Vdc	68000pF±10%	4.0×3.5	2.5	5.0	K1	M1
RHEL82A104K1□□H03□	X8L (Murata)	100Vdc	0.10μF±10%	4.0×3.5	2.5	2.5	A2	DB
RHEL82A104K1□□H03□	X8L (Murata)	100Vdc	0.10μF±10%	4.0×3.5	2.5	5.0	K1	M1
RHEL82A154K2□□H03□	X8L (Murata)	100Vdc	0.15μF±10%	5.5×4.0	3.15	2.5	A2	DB
RHEL82A154K2□□H03□	X8L (Murata)	100Vdc	0.15μF±10%	5.5×4.0	3.15	5.0	K1	M1
RHEL82A224K2□□H03□	X8L (Murata)	100Vdc	0.22μF±10%	5.5×4.0	3.15	2.5	A2	DB
RHEL82A224K2□□H03□	X8L (Murata)	100Vdc	0.22μF±10%	5.5×4.0	3.15	5.0	K1	M1

Two blank columns are filled with the lead style code. Please refer to the 3 columns on the right for the appropriate code.
The last blank column is filled with the packaging code. (B: bulk, A: ammo pack)

Specifications and Test Methods

No.	AEC-Q200 Test Item		Specification: Temperature Compensating Type (Char. X8G)	Specification: High Dielectric Constant Type (Char. X8L)	AEC-Q200 Test Method
1	Pre-and Post-Stress Electrical Test		–		
2	High Temperature Exposure (Storage)		The measured and observed characteristics should satisfy the specifications in the following table.		Sit the capacitor for 1,000±12h at 150±3°C. Let sit for 24±2h at room temperature, then measure.
		Appearance	No defects or abnormalities		
		Capacitance Change	Within ±3% or ±0.3pF (Whichever is larger)	Within ±12.5%	
		Q/D.F.	Q≧350	0.04 max.	
		I.R.	More than 1,000MΩ or 50MΩ · μF (Whichever is smaller)		
3	Temperature Cycling		The measured and observed characteristics should satisfy the specifications in the following table.		Perform the 1,000 cycles according to the four heat treatments listed in the following table. Let sit for 24±2h at *room condition, then measure.
		Appearance	No defects or abnormalities except color change of outer coating		
		Capacitance Change	Within ±5% or ±0.5pF (Whichever is larger)	Within ±12.5%	
		Q/D.F.	Q≧350	0.05 max.	
		I.R.	1,000MΩ or 50MΩ · μF min. (Whichever is smaller)		
4	Moisture Resistance		The measured and observed characteristics should satisfy the specifications in the following table.		Apply the 24h heat (25 to 65°C) and humidity (80 to 98%) treatment shown below, 10 consecutive times. Let sit for 24±2h at *room condition, then measure.
		Appearance	No defects or abnormalities		
		Capacitance Change	Within ±5% or ±0.5pF (Whichever is larger)	Within ±12.5%	
		Q/D.F.	Q≧200	0.05 max.	
		I.R.	500MΩ or 25MΩ · μF min. (Whichever is smaller)		
5	Biased Humidity		The measured and observed characteristics should satisfy the specifications in the following table.		Apply the rated voltage and DC1.3+0.2/-0V (add 6.8kΩ resistor) at 85±3°C and 80 to 85% humidity for 1,000±12h. Remove and let sit for 24±2h at *room condition, then measure. The charge/discharge current is less than 50mA.
		Appearance	No defects or abnormalities		
		Capacitance Change	Within ±5% or ±0.5pF (Whichever is larger)	Within ±12.5%	
		Q/D.F.	Q≧200	0.05 max.	
		I.R.	500MΩ or 25MΩ · μF min. (Whichever is smaller)		
6	Operational Life		The measured and observed characteristics should satisfy the specifications in the following table.		Apply 150% of the rated voltage for 1,000±12h at 150±3°C. Let sit for 24±2h at *room condition, then measure. The charge/discharge current is less than 50mA.
		Appearance	No defects or abnormalities except color change of outer coating		
		Capacitance Change	Within ±3% or ±0.3pF (Whichever is larger)	Within ±12.5%	
		Q/D.F.	Q≧350	0.04 max.	
		I.R.	1,000MΩ or 50MΩ · μF min. (Whichever is smaller)		
7	External Visual		No defects or abnormalities		Visual inspection
8	Physical Dimension		Within the specified dimensions		Using calipers and micrometers.
9	Marking		To be easily legible.		Visual inspection

Step	1	2	3	4
Temp. (°C)	-55+0/-3	Room Temp.	150+3/-0	Room Temp.
Time (min.)	15±3	1	15±3	1

•Pretreatment
Perform the heat treatment at 150+0/-10°C for 60±5 min and then let sit for 24±2h at *room condition. (for Char. X8L)

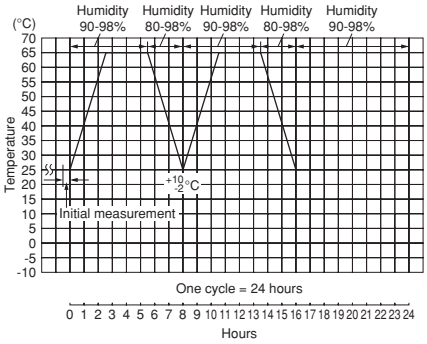

•Pretreatment
Perform the heat treatment at 150+0/-10°C for 60±5 min and then let sit for 24±2h at *room condition. (for Char. X8L)

* "room condition" Temperature: 15 to 35°C, Relative humidity: 45 to 75%, Atmosphere pressure: 86 to 106kPa

Continued on the following page.

Specifications and Test Methods

Continued from the preceding page.

No.	AEC-Q200 Test Item		Specification: Temperature Compensating Type (Char. X8G)	Specification: High Dielectric Constant Type (Char. X8L)	AEC-Q200 Test Method
10	Resistance to Solvents	Appearance	No defects or abnormalities		Per MIL-STD-202 Method 215 Solvent 1: 1 part (by volume) of isopropyl alcohol 3 parts (by volume) of mineral spirits Solvent 2: Terpene defluxer Solvent 3: 42 parts (by volume) of water 1 part (by volume) of propylene glycol monomethyl ether 1 part (by volume) of monoethanolamine
		Capacitance	Within the specified tolerance		
		Q/D.F.	Q≧1,000	0.025 max.	
		I.R.	More than 10,000MΩ or 500MΩ · μF (Whichever is smaller)		
11	Mechanical Shock	Appearance	No defects or abnormalities		Three shocks in each direction should be applied along 3 mutually perpendicular axes of the test specimen (18 shocks). The specified test pulse should be Half-sine and should have a duration: 0.5ms, peak value: 1,500G and velocity change: 4.7m/s.
		Capacitance	Within the specified tolerance		
		Q/D.F.	Q≧1,000	0.025 max.	
12	Vibration	Appearance	No defects or abnormalities		The capacitor should be subjected to a simple harmonic motion having a total amplitude of 1.5mm, the frequency being varied uniformly between the approximate limits of 10 and 2,000Hz. The frequency range, from 10 to 2,000Hz and return to 10Hz, should be traversed in approximately 20min. This motion should be applied for 12 items in each 3 mutually perpendicular directions (total of 36 times).
		Capacitance	Within the specified tolerance		
		Q/D.F.	Q≧1,000	0.025 max.	
13	Resistance to Soldering Heat		The measured and observed characteristics should satisfy the specifications in the following table.		The lead wire is immersed in the melted solder 1.5 to 2mm from the main body at 260±5°C for 10±1s. The specified items are measured after 24±2h. •Pretreatment Perform the heat treatment at 150+0/-10°C for 60±5 min and then let sit for 24±2h at *room condition. (for Char. X8L)
		Appearance	No defects or abnormalities		
		Capacitance Change	Within ±2.5% or ±0.25pF (Whichever is larger)	Within ±7.5%	
		Dielectric Strength (Between Terminals)	No defects		
14	Thermal Shock		The measured and observed characteristics should satisfy the specifications in the following table.		Perform the 300 cycles according to the two heat treatments listed in the following table (Maximum transfer time is 20s.). Let sit for 24±2h at *room condition, then measure. Step 1: Temp. (°C) -55+0/-3, Time (min.) 15±3 Step 2: Temp. (°C) 150+3/-0, Time (min.) 15±3 •Pretreatment Perform the heat treatment at 150+0/-10°C for 60±5min and then let sit for 24±2h at *room condition. (for Char. X8L)
		Appearance	No defects or abnormalities		
		Capacitance Change	Within ±5% or ±0.5pF (Whichever is larger)	Within ±12.5%	
		Q/D.F.	Q≧350	0.05 max.	
		I.R.	1,000MΩ or 50MΩ · μF min. (Whichever is smaller)		
15	ESD	Appearance	No defects or abnormalities		Per AEC-Q200-004
		Capacitance	Within the specified tolerance		
		Q/D.F.	Q≧1,000	0.025 max.	
		I.R.	More than 10,000MΩ or 500MΩ · μF (Whichever is smaller)		
16	Solderability		Lead wire should be soldered with uniform coating on the axial direction over 95% of the circumferential direction.		The terminal of a capacitor is dipped into a solution of ethanol (JIS-K-8101) and rosin (JIS-K-5902) (25%rosin in weight propotion) and then into molten solder (JIS-Z-3282) for 2±0.5 sec. In both cases the depth of dipping is up to about 1.5 to 2mm from the terminal body. Temp. of solder: 245±5°C Lead Free Solder (Sn-3.0Ag-0.5Cu) 235±5°C H60A or H63A Eutectic Solder

* "room condition" Temperature: 15 to 35°C, Relative humidity: 45 to 75%, Atmosphere pressure: 86 to 106kPa

Continued on the following page.

Specifications and Test Methods

Continued from the preceding page.

No.	AEC-Q200 Test Item		Specification: Temperature Compensating Type (Char. X8G)	Specification: High Dielectric Constant Type (Char. X8L)	AEC-Q200 Test Method
17	Electrical Characterization	Appearance	No defects or abnormalities		Visual inspection.
		Capacitance	Within the specified tolerance		The capacitance, Q/D.F. should be measured at 25°C at the frequency and voltage shown in the table.
		Q/D.F.	Q≧1,000	0.025 max.	

Char.	Nominal Cap.	Frequency	Voltage
X8G	C≦1,000pF	1±0.1MHz	AC0.5 to 5V (r.m.s.)
X8G	C>1000pF	1±0.1kHz	AC1±0.2V (r.m.s.)
X8L	–	1±0.1kHz	AC1±0.2V (r.m.s.)

No.	AEC-Q200 Test Item		Specification		AEC-Q200 Test Method
17	Electrical Characterization	Insulation Resistance (I.R.)	Room Temperature	10,000MΩ or 500MΩ · μF min. (Whichever is smaller)	The insulation resistance should be measured at 25±3°C with a DC voltage not exceeding the rated voltage at normal temperature and humidity and within 2min. of charging. (Charge/Discharge current ≦ 50mA.)
			High Temperature	100MΩ or 5MΩ · μF min. (Whichever is smaller)	The insulation resistance should be measured at 150±3°C with a DC voltage not exceeding the rated voltage at normal temperature and humidity and within 2min. of charging. (Charge/Discharge current ≦ 50mA.)
		Dielectric Strength	Between Terminals	No defects or abnormalities	The capacitor should not be damaged when DC voltage of 300% of the rated voltage (for Char. X8G) or DC voltage of 250% of the rated voltage (for Char. X8L) is applied between the terminations for 1 to 5 seconds. (Charge/Discharge current ≦ 50mA.)
			Body Insulation	No defects or abnormalities	The capacitor is placed in a container with metal balls of 1mm diameter so that each terminal, short-circuit is kept approximately 2mm from the balls, and 250% of the rated DC voltage is impressed for 1 to 5 seconds between capacitor terminals and metal balls. (Charge/Discharge current ≦ 50mA.) 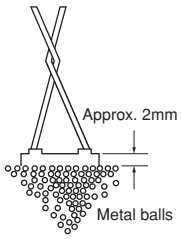
18	Terminal Strength	Tensile Strength	Termination not to be broken or loosened		As in the figure, fix the capacitor body, apply the force gradually to each lead in the radial direction of the capacitor until reaching 10N and then keep the force applied for 10±1 seconds. 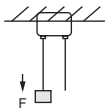
		Bending Strength	Termination not to be broken or loosened		Each lead wire should be subjected to a force of 2.5N and then be bent 90° at the point of egress in one direction. Each wire is then returned to the original position and bent 90° in the opposite direction at the rate of one bend per 2 to 3 seconds.
19	Capacitance Temperature Characteristics		Within the specified Tolerance. (Table A) Capacitance Drift is within ±0.2% or ±0.05pF (Whichever is larger)	Within ±15% (Temp. Range: -55 to +125°C) Within +15/-40% (Temp. Range: +125 to +150°C)	The capacitance change should be measured after 5min. at each specified temperature step.

Step	Temperature (°C)
1	25±2
2	-55±3
3	25±2
4	150±3
5	25±2

The temperature coefficient or the ranges of capacitance change is determined using the capacitance measured in step 3 as a reference.
•Pretreatment
Perform the heat treatment at 150+0/-10°C for 60±5 min and then let sit for 24±2h at *room condition.
Perform the initial measurement. (for Char. X8L)

* "room condition" Temperature: 15 to 35°C, Relative humidity: 45 to 75%, Atmosphere pressure: 86 to 106kPa

Table A

Char.	Nominal Values (ppm/°C) *	Capacitance Change from 25°C (%)					
		–55°C		–30°C		–10°C	
		Max.	Min.	Max.	Min.	Max.	Min.
X8G	0±30	0.58	–0.24	0.40	–0.17	0.25	–0.11

* Nominal values denote the temperature coefficient within a range of 25°C to 150°C.

Radial Lead Type Monolithic Ceramic Capacitors

muRata

RDE Series (For General Use Only) (DC25V-DC1kV)

■ Features

1. Small size and large capacitance
2. Low ESR characteristics for high frequency
3. Meet LF (Lead Free) and HF (Halogen Free)
4. Flow soldering is available, but re-flow soldering is not available.

■ Applications

General electronic equipment
(Do not use for automotive-related power train and safety equipment.)

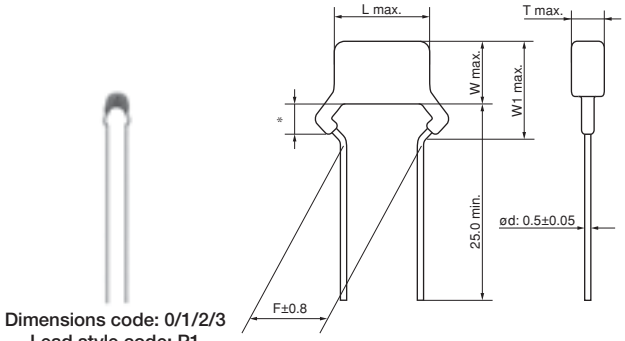

Dimensions code: 0/1/2/3
Lead style code: P1

∗ Coating extension does not exceed the end of the lead bend.
· Lead Wire: Solder Coated CP Wire

(in mm)

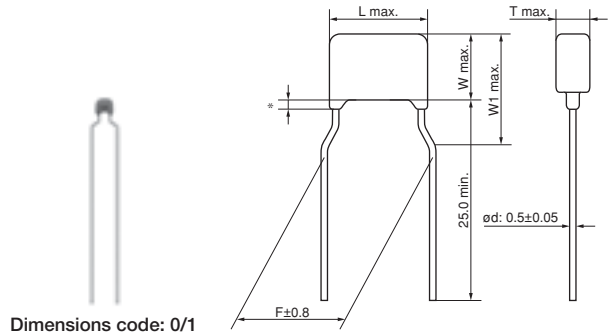

Dimensions code: 0/1
Lead style code: K1

∗ Coating extension does not exceed the end of the lead bend.
· Lead Wire: Solder Coated CP Wire

(in mm)

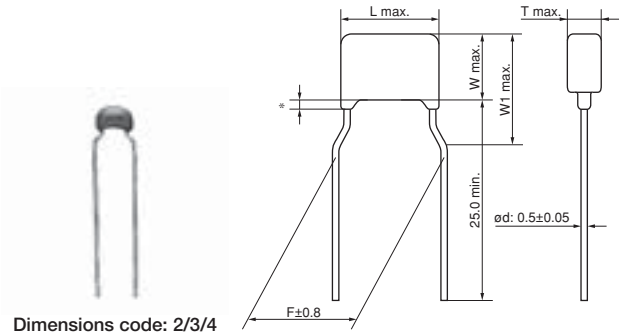

Dimensions code: 2/3/4
Lead style code: K1

∗ Coating extension does not exceed the end of the lead bend.
· Lead Wire: Solder Coated CP Wire

(in mm)

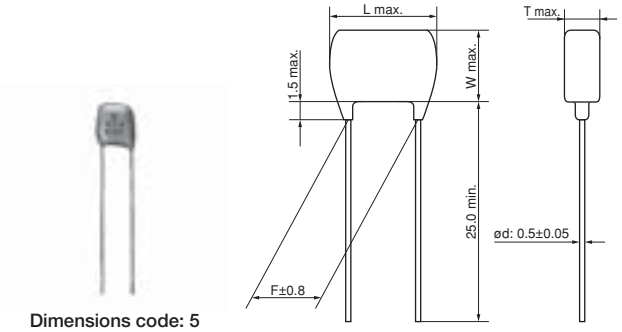

Dimensions code: 5
Lead style code: B1

· Lead Wire: Solder Coated CP Wire

(in mm)

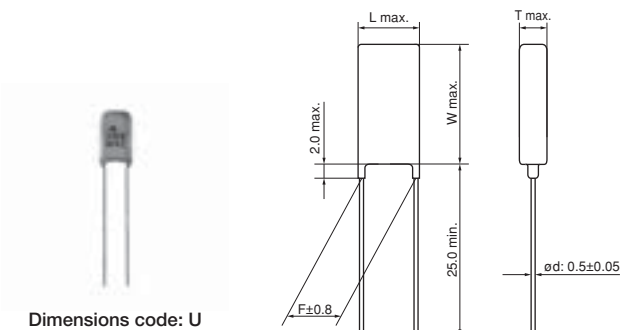

Dimensions code: U
Lead style code: B1

· Lead Wire: Solder Coated CP Wire

(in mm)

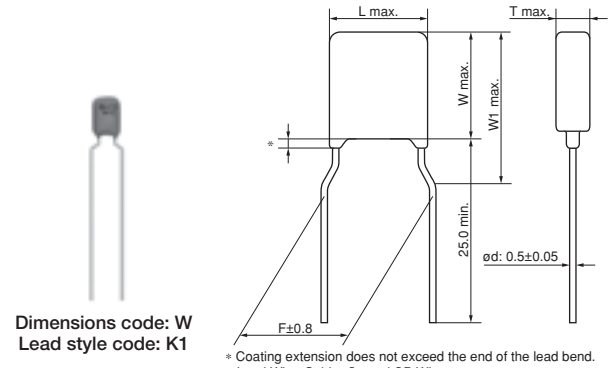

Dimensions code: W
Lead style code: K1

∗ Coating extension does not exceed the end of the lead bend.
· Lead Wire: Solder Coated CP Wire

(in mm)

■ Dimensions

Dimensions and Lead Style Code	Dimensions (mm)					
	L	W	W1	T	F	d
0P1/0S1	5.0	3.5	6.0	See the individual product specification	2.5	0.5
0K1/0M1	4.0	3.5	6.0		5.0	0.5
1P1/1S1	5.0	3.5	5.0		2.5	0.5
1K1/1M1	4.5	3.5	5.0		5.0	0.5
2P1/2S1	5.5	4.0	6.0		2.5	0.5
2K1/2M1	5.5	4.0	6.0		5.0	0.5
3P1/3S1	5.5	5.0	7.5		2.5	0.5
3K1/3M1	5.5	5.0	7.5		5.0	0.5
4K1/4M1	7.5	5.5	8.0		5.0	0.5
5B1/5E1	7.5	7.5*	-		5.0	0.5
UB1/UE1	7.7	12.5*	-		5.0	0.5
WK1/WM1	5.5	7.5	10.0		5.0	0.5

*DC630V, DC1kV: W+0.5mm

■ Marking

Dimensions Code \ Rated Voltage	DC25V		DC50V					DC100V			DC250V	DC630V	DC1kV
Temp. Char.	X7S	X7R	C0G	X7S	X7R	F	Y5V	C0G	X7S	X7R	X7R, U2J		
0	224K	104K	A 102J	–	224K	473	103Z	A 102J	–	224K	–	–	–
1		–		–		–	–		–		U 102J	–	–
2	Ⓜ 475 K2C	–	–	Ⓜ 475 K5C	Ⓜ 105 K5C	–	–	–	–	Ⓜ 105 K1C	Ⓜ 103 J4U (U2J) Ⓜ 473 K4C (X7R)	Ⓜ 472 J7U (U2J) Ⓜ 153 K7C (X7R)	Ⓜ 102 JAU (U2J) Ⓜ 102 KAC (X7R)
3, 4, W	Ⓜ 226 K2C	–	–	–	Ⓜ 335 K5C	–	–	–	Ⓜ 225 K1C	–	Ⓜ 473 J4U (U2J) Ⓜ 224 K4C (X7R)	Ⓜ 103 J7U (U2J) Ⓜ 104 K7C (X7R)	Ⓜ 472 JAU (U2J) Ⓜ 333 KAC (X7R)
5, U	–	–	–	–	–	–	–	–	–	–	–	Ⓜ 333 J7U (U2J) Ⓜ 474 M7C (X7R)	Ⓜ 103 JAU (U2J) Ⓜ 104 KAC (X7R)

Temperature Characteristics	Marked with code (C0G char.: A, X7S/X7R char.: C, F/Y5V char.: F, U2J char.: U) A part is omitted (Please refer to the marking example.)
Nominal Capacitance	Under 100pF: Actual value 100pF and over: Marked with 3 figures
Capacitance Tolerance	Marked with code A part is omitted (Please refer to the marking example.)
Rated Voltage	Marked with code (DC25V: 2, DC50V: 5, DC100V: 1, DC250V: 4, DC630V: 7, DC1kV: A) Lower horizontal line for F char. A part is omitted (Please refer to the marking example.)
Manufacturer's Identification	Marked with Ⓜ A part is omitted (Please refer to the marking example.)

Temperature Compensating Type, C0G/U2J Characteristics

Part Number	Temp. Char.	Rated Voltage	Capacitance	Dimensions LxW (mm)	Dimension T (mm)	Lead Space F (mm)	Lead Style Code Bulk	Lead Style Code Taping
RDE5C1H1R0C0□□H03□	C0G (EIA)	50Vdc	1.0pF±0.25pF	4.0×3.5	2.5	5.0	K1	M1
RDE5C1H1R0C0□□H03□	C0G (EIA)	50Vdc	1.0pF±0.25pF	5.0×3.5	2.5	2.5	P1	S1
RDE5C1H2R0C0□□H03□	C0G (EIA)	50Vdc	2.0pF±0.25pF	4.0×3.5	2.5	5.0	K1	M1
RDE5C1H2R0C0□□H03□	C0G (EIA)	50Vdc	2.0pF±0.25pF	5.0×3.5	2.5	2.5	P1	S1
RDE5C1H3R0C0□□H03□	C0G (EIA)	50Vdc	3.0pF±0.25pF	4.0×3.5	2.5	5.0	K1	M1
RDE5C1H3R0C0□□H03□	C0G (EIA)	50Vdc	3.0pF±0.25pF	5.0×3.5	2.5	2.5	P1	S1
RDE5C1H4R0C0□□H03□	C0G (EIA)	50Vdc	4.0pF±0.25pF	4.0×3.5	2.5	5.0	K1	M1
RDE5C1H4R0C0□□H03□	C0G (EIA)	50Vdc	4.0pF±0.25pF	5.0×3.5	2.5	2.5	P1	S1
RDE5C1H5R0C0□□H03□	C0G (EIA)	50Vdc	5.0pF±0.25pF	4.0×3.5	2.5	5.0	K1	M1
RDE5C1H5R0C0□□H03□	C0G (EIA)	50Vdc	5.0pF±0.25pF	5.0×3.5	2.5	2.5	P1	S1
RDE5C1H6R0D0□□H03□	C0G (EIA)	50Vdc	6.0pF±0.5pF	4.0×3.5	2.5	5.0	K1	M1
RDE5C1H6R0D0□□H03□	C0G (EIA)	50Vdc	6.0pF±0.5pF	5.0×3.5	2.5	2.5	P1	S1
RDE5C1H7R0D0□□H03□	C0G (EIA)	50Vdc	7.0pF±0.5pF	4.0×3.5	2.5	5.0	K1	M1
RDE5C1H7R0D0□□H03□	C0G (EIA)	50Vdc	7.0pF±0.5pF	5.0×3.5	2.5	2.5	P1	S1

Continued on the following page.

Continued from the preceding page.

Part Number	Temp. Char.	Rated Voltage	Capacitance	Dimensions LxW (mm)	Dimension T (mm)	Lead Space F (mm)	Lead Style Code Bulk	Lead Style Code Taping
RDE5C1H8R0D0□□H03□	C0G (EIA)	50Vdc	8.0pF±0.5pF	4.0×3.5	2.5	5.0	K1	M1
RDE5C1H8R0D0□□H03□	C0G (EIA)	50Vdc	8.0pF±0.5pF	5.0×3.5	2.5	2.5	P1	S1
RDE5C1H9R0D0□□H03□	C0G (EIA)	50Vdc	9.0pF±0.5pF	4.0×3.5	2.5	5.0	K1	M1
RDE5C1H9R0D0□□H03□	C0G (EIA)	50Vdc	9.0pF±0.5pF	5.0×3.5	2.5	2.5	P1	S1
RDE5C1H100J0□□H03□	C0G (EIA)	50Vdc	10pF±5%	4.0×3.5	2.5	5.0	K1	M1
RDE5C1H100J0□□H03□	C0G (EIA)	50Vdc	10pF±5%	5.0×3.5	2.5	2.5	P1	S1
RDE5C1H120J0□□H03□	C0G (EIA)	50Vdc	12pF±5%	4.0×3.5	2.5	5.0	K1	M1
RDE5C1H120J0□□H03□	C0G (EIA)	50Vdc	12pF±5%	5.0×3.5	2.5	2.5	P1	S1
RDE5C1H150J0□□H03□	C0G (EIA)	50Vdc	15pF±5%	4.0×3.5	2.5	5.0	K1	M1
RDE5C1H150J0□□H03□	C0G (EIA)	50Vdc	15pF±5%	5.0×3.5	2.5	2.5	P1	S1
RDE5C1H180J0□□H03□	C0G (EIA)	50Vdc	18pF±5%	4.0×3.5	2.5	5.0	K1	M1
RDE5C1H180J0□□H03□	C0G (EIA)	50Vdc	18pF±5%	5.0×3.5	2.5	2.5	P1	S1
RDE5C1H220J0□□H03□	C0G (EIA)	50Vdc	22pF±5%	4.0×3.5	2.5	5.0	K1	M1
RDE5C1H220J0□□H03□	C0G (EIA)	50Vdc	22pF±5%	5.0×3.5	2.5	2.5	P1	S1
RDE5C1H270J0□□H03□	C0G (EIA)	50Vdc	27pF±5%	4.0×3.5	2.5	5.0	K1	M1
RDE5C1H270J0□□H03□	C0G (EIA)	50Vdc	27pF±5%	5.0×3.5	2.5	2.5	P1	S1
RDE5C1H330J0□□H03□	C0G (EIA)	50Vdc	33pF±5%	4.0×3.5	2.5	5.0	K1	M1
RDE5C1H330J0□□H03□	C0G (EIA)	50Vdc	33pF±5%	5.0×3.5	2.5	2.5	P1	S1
RDE5C1H390J0□□H03□	C0G (EIA)	50Vdc	39pF±5%	4.0×3.5	2.5	5.0	K1	M1
RDE5C1H390J0□□H03□	C0G (EIA)	50Vdc	39pF±5%	5.0×3.5	2.5	2.5	P1	S1
RDE5C1H470J0□□H03□	C0G (EIA)	50Vdc	47pF±5%	4.0×3.5	2.5	5.0	K1	M1
RDE5C1H470J0□□H03□	C0G (EIA)	50Vdc	47pF±5%	5.0×3.5	2.5	2.5	P1	S1
RDE5C1H560J0□□H03□	C0G (EIA)	50Vdc	56pF±5%	4.0×3.5	2.5	5.0	K1	M1
RDE5C1H560J0□□H03□	C0G (EIA)	50Vdc	56pF±5%	5.0×3.5	2.5	2.5	P1	S1
RDE5C1H680J0□□H03□	C0G (EIA)	50Vdc	68pF±5%	4.0×3.5	2.5	5.0	K1	M1
RDE5C1H680J0□□H03□	C0G (EIA)	50Vdc	68pF±5%	5.0×3.5	2.5	2.5	P1	S1
RDE5C1H820J0□□H03□	C0G (EIA)	50Vdc	82pF±5%	4.0×3.5	2.5	5.0	K1	M1
RDE5C1H820J0□□H03□	C0G (EIA)	50Vdc	82pF±5%	5.0×3.5	2.5	2.5	P1	S1
RDE5C1H101J0□□H03□	C0G (EIA)	50Vdc	100pF±5%	4.0×3.5	2.5	5.0	K1	M1
RDE5C1H101J0□□H03□	C0G (EIA)	50Vdc	100pF±5%	5.0×3.5	2.5	2.5	P1	S1
RDE5C1H121J0□□H03□	C0G (EIA)	50Vdc	120pF±5%	4.0×3.5	2.5	5.0	K1	M1
RDE5C1H121J0□□H03□	C0G (EIA)	50Vdc	120pF±5%	5.0×3.5	2.5	2.5	P1	S1
RDE5C1H151J0□□H03□	C0G (EIA)	50Vdc	150pF±5%	4.0×3.5	2.5	5.0	K1	M1
RDE5C1H151J0□□H03□	C0G (EIA)	50Vdc	150pF±5%	5.0×3.5	2.5	2.5	P1	S1
RDE5C1H181J0□□H03□	C0G (EIA)	50Vdc	180pF±5%	4.0×3.5	2.5	5.0	K1	M1
RDE5C1H181J0□□H03□	C0G (EIA)	50Vdc	180pF±5%	5.0×3.5	2.5	2.5	P1	S1
RDE5C1H221J0□□H03□	C0G (EIA)	50Vdc	220pF±5%	4.0×3.5	2.5	5.0	K1	M1
RDE5C1H221J0□□H03□	C0G (EIA)	50Vdc	220pF±5%	5.0×3.5	2.5	2.5	P1	S1
RDE5C1H271J0□□H03□	C0G (EIA)	50Vdc	270pF±5%	4.0×3.5	2.5	5.0	K1	M1
RDE5C1H271J0□□H03□	C0G (EIA)	50Vdc	270pF±5%	5.0×3.5	2.5	2.5	P1	S1
RDE5C1H331J0□□H03□	C0G (EIA)	50Vdc	330pF±5%	4.0×3.5	2.5	5.0	K1	M1
RDE5C1H331J0□□H03□	C0G (EIA)	50Vdc	330pF±5%	5.0×3.5	2.5	2.5	P1	S1
RDE5C1H391J0□□H03□	C0G (EIA)	50Vdc	390pF±5%	4.0×3.5	2.5	5.0	K1	M1
RDE5C1H391J0□□H03□	C0G (EIA)	50Vdc	390pF±5%	5.0×3.5	2.5	2.5	P1	S1
RDE5C1H471J0□□H03□	C0G (EIA)	50Vdc	470pF±5%	4.0×3.5	2.5	5.0	K1	M1
RDE5C1H471J0□□H03□	C0G (EIA)	50Vdc	470pF±5%	5.0×3.5	2.5	2.5	P1	S1
RDE5C1H561J0□□H03□	C0G (EIA)	50Vdc	560pF±5%	4.0×3.5	2.5	5.0	K1	M1
RDE5C1H561J0□□H03□	C0G (EIA)	50Vdc	560pF±5%	5.0×3.5	2.5	2.5	P1	S1
RDE5C1H681J0□□H03□	C0G (EIA)	50Vdc	680pF±5%	4.0×3.5	2.5	5.0	K1	M1
RDE5C1H681J0□□H03□	C0G (EIA)	50Vdc	680pF±5%	5.0×3.5	2.5	2.5	P1	S1
RDE5C1H821J0□□H03□	C0G (EIA)	50Vdc	820pF±5%	4.0×3.5	2.5	5.0	K1	M1
RDE5C1H821J0□□H03□	C0G (EIA)	50Vdc	820pF±5%	5.0×3.5	2.5	2.5	P1	S1
RDE5C1H102J0□□H03□	C0G (EIA)	50Vdc	1000pF±5%	4.0×3.5	2.5	5.0	K1	M1
RDE5C1H102J0□□H03□	C0G (EIA)	50Vdc	1000pF±5%	5.0×3.5	2.5	2.5	P1	S1
RDE5C1H122J0□□H03□	C0G (EIA)	50Vdc	1200pF±5%	4.0×3.5	2.5	5.0	K1	M1
RDE5C1H122J0□□H03□	C0G (EIA)	50Vdc	1200pF±5%	5.0×3.5	2.5	2.5	P1	S1
RDE5C1H152J0□□H03□	C0G (EIA)	50Vdc	1500pF±5%	4.0×3.5	2.5	5.0	K1	M1

Continued on the following page.

Continued from the preceding page.

Part Number	Temp. Char.	Rated Voltage	Capacitance	Dimensions LxW (mm)	Dimension T (mm)	Lead Space F (mm)	Lead Style Code Bulk	Lead Style Code Taping
RDE5C1H152J0□□H03□	C0G (EIA)	50Vdc	1500pF±5%	5.0×3.5	2.5	2.5	P1	S1
RDE5C1H182J0□□H03□	C0G (EIA)	50Vdc	1800pF±5%	4.0×3.5	2.5	5.0	K1	M1
RDE5C1H182J0□□H03□	C0G (EIA)	50Vdc	1800pF±5%	5.0×3.5	2.5	2.5	P1	S1
RDE5C1H222J0□□H03□	C0G (EIA)	50Vdc	2200pF±5%	4.0×3.5	2.5	5.0	K1	M1
RDE5C1H222J0□□H03□	C0G (EIA)	50Vdc	2200pF±5%	5.0×3.5	2.5	2.5	P1	S1
RDE5C1H272J0□□H03□	C0G (EIA)	50Vdc	2700pF±5%	4.0×3.5	2.5	5.0	K1	M1
RDE5C1H272J0□□H03□	C0G (EIA)	50Vdc	2700pF±5%	5.0×3.5	2.5	2.5	P1	S1
RDE5C1H332J0□□H03□	C0G (EIA)	50Vdc	3300pF±5%	4.0×3.5	2.5	5.0	K1	M1
RDE5C1H332J0□□H03□	C0G (EIA)	50Vdc	3300pF±5%	5.0×3.5	2.5	2.5	P1	S1
RDE5C1H392J0□□H03□	C0G (EIA)	50Vdc	3900pF±5%	4.0×3.5	2.5	5.0	K1	M1
RDE5C1H392J0□□H03□	C0G (EIA)	50Vdc	3900pF±5%	5.0×3.5	2.5	2.5	P1	S1
RDE5C1H472J1□□H03□	C0G (EIA)	50Vdc	4700pF±5%	4.5×3.5	3.15	5.0	K1	M1
RDE5C1H472J1□□H03□	C0G (EIA)	50Vdc	4700pF±5%	5.0×3.5	3.15	2.5	P1	S1
RDE5C1H562J1□□H03□	C0G (EIA)	50Vdc	5600pF±5%	4.5×3.5	3.15	5.0	K1	M1
RDE5C1H562J1□□H03□	C0G (EIA)	50Vdc	5600pF±5%	5.0×3.5	3.15	2.5	P1	S1
RDE5C1H682J1□□H03□	C0G (EIA)	50Vdc	6800pF±5%	4.5×3.5	3.15	5.0	K1	M1
RDE5C1H682J1□□H03□	C0G (EIA)	50Vdc	6800pF±5%	5.0×3.5	3.15	2.5	P1	S1
RDE5C1H822J1□□H03□	C0G (EIA)	50Vdc	8200pF±5%	4.5×3.5	3.15	5.0	K1	M1
RDE5C1H822J1□□H03□	C0G (EIA)	50Vdc	8200pF±5%	5.0×3.5	3.15	2.5	P1	S1
RDE5C1H103J1□□H03□	C0G (EIA)	50Vdc	10000pF±5%	4.5×3.5	3.15	5.0	K1	M1
RDE5C1H103J1□□H03□	C0G (EIA)	50Vdc	10000pF±5%	5.0×3.5	3.15	2.5	P1	S1
RDE5C1H123J1□□H03□	C0G (EIA)	50Vdc	12000pF±5%	4.5×3.5	3.15	5.0	K1	M1
RDE5C1H123J1□□H03□	C0G (EIA)	50Vdc	12000pF±5%	5.0×3.5	3.15	2.5	P1	S1
RDE5C1H153J1□□H03□	C0G (EIA)	50Vdc	15000pF±5%	4.5×3.5	3.15	5.0	K1	M1
RDE5C1H153J1□□H03□	C0G (EIA)	50Vdc	15000pF±5%	5.0×3.5	3.15	2.5	P1	S1
RDE5C1H183J1□□H03□	C0G (EIA)	50Vdc	18000pF±5%	4.5×3.5	3.15	5.0	K1	M1
RDE5C1H183J1□□H03□	C0G (EIA)	50Vdc	18000pF±5%	5.0×3.5	3.15	2.5	P1	S1
RDE5C1H223J1□□H03□	C0G (EIA)	50Vdc	22000pF±5%	4.5×3.5	3.15	5.0	K1	M1
RDE5C1H223J1□□H03□	C0G (EIA)	50Vdc	22000pF±5%	5.0×3.5	3.15	2.5	P1	S1
RDE5C2A1R0C0□□H03□	C0G (EIA)	100Vdc	1.0pF±0.25pF	4.0×3.5	2.5	5.0	K1	M1
RDE5C2A1R0C0□□H03□	C0G (EIA)	100Vdc	1.0pF±0.25pF	5.0×3.5	2.5	2.5	P1	S1
RDE5C2A2R0C0□□H03□	C0G (EIA)	100Vdc	2.0pF±0.25pF	4.0×3.5	2.5	5.0	K1	M1
RDE5C2A2R0C0□□H03□	C0G (EIA)	100Vdc	2.0pF±0.25pF	5.0×3.5	2.5	2.5	P1	S1
RDE5C2A3R0C0□□H03□	C0G (EIA)	100Vdc	3.0pF±0.25pF	4.0×3.5	2.5	5.0	K1	M1
RDE5C2A3R0C0□□H03□	C0G (EIA)	100Vdc	3.0pF±0.25pF	5.0×3.5	2.5	2.5	P1	S1
RDE5C2A4R0C0□□H03□	C0G (EIA)	100Vdc	4.0pF±0.25pF	4.0×3.5	2.5	5.0	K1	M1
RDE5C2A4R0C0□□H03□	C0G (EIA)	100Vdc	4.0pF±0.25pF	5.0×3.5	2.5	2.5	P1	S1
RDE5C2A5R0C0□□H03□	C0G (EIA)	100Vdc	5.0pF±0.25pF	4.0×3.5	2.5	5.0	K1	M1
RDE5C2A5R0C0□□H03□	C0G (EIA)	100Vdc	5.0pF±0.25pF	5.0×3.5	2.5	2.5	P1	S1
RDE5C2A6R0D0□□H03□	C0G (EIA)	100Vdc	6.0pF±0.5pF	4.0×3.5	2.5	5.0	K1	M1
RDE5C2A6R0D0□□H03□	C0G (EIA)	100Vdc	6.0pF±0.5pF	5.0×3.5	2.5	2.5	P1	S1
RDE5C2A7R0D0□□H03□	C0G (EIA)	100Vdc	7.0pF±0.5pF	4.0×3.5	2.5	5.0	K1	M1
RDE5C2A7R0D0□□H03□	C0G (EIA)	100Vdc	7.0pF±0.5pF	5.0×3.5	2.5	2.5	P1	S1
RDE5C2A8R0D0□□H03□	C0G (EIA)	100Vdc	8.0pF±0.5pF	4.0×3.5	2.5	5.0	K1	M1
RDE5C2A8R0D0□□H03□	C0G (EIA)	100Vdc	8.0pF±0.5pF	5.0×3.5	2.5	2.5	P1	S1
RDE5C2A9R0D0□□H03□	C0G (EIA)	100Vdc	9.0pF±0.5pF	4.0×3.5	2.5	5.0	K1	M1
RDE5C2A9R0D0□□H03□	C0G (EIA)	100Vdc	9.0pF±0.5pF	5.0×3.5	2.5	2.5	P1	S1
RDE5C2A100J0□□H03□	C0G (EIA)	100Vdc	10pF±5%	4.0×3.5	2.5	5.0	K1	M1
RDE5C2A100J0□□H03□	C0G (EIA)	100Vdc	10pF±5%	5.0×3.5	2.5	2.5	P1	S1
RDE5C2A120J0□□H03□	C0G (EIA)	100Vdc	12pF±5%	4.0×3.5	2.5	5.0	K1	M1
RDE5C2A120J0□□H03□	C0G (EIA)	100Vdc	12pF±5%	5.0×3.5	2.5	2.5	P1	S1
RDE5C2A150J0□□H03□	C0G (EIA)	100Vdc	15pF±5%	4.0×3.5	2.5	5.0	K1	M1
RDE5C2A150J0□□H03□	C0G (EIA)	100Vdc	15pF±5%	5.0×3.5	2.5	2.5	P1	S1
RDE5C2A180J0□□H03□	C0G (EIA)	100Vdc	18pF±5%	4.0×3.5	2.5	5.0	K1	M1
RDE5C2A180J0□□H03□	C0G (EIA)	100Vdc	18pF±5%	5.0×3.5	2.5	2.5	P1	S1
RDE5C2A220J0□□H03□	C0G (EIA)	100Vdc	22pF±5%	4.0×3.5	2.5	5.0	K1	M1
RDE5C2A220J0□□H03□	C0G (EIA)	100Vdc	22pF±5%	5.0×3.5	2.5	2.5	P1	S1

Continued on the following page.

Continued from the preceding page.

Part Number	Temp. Char.	Rated Voltage	Capacitance	Dimensions LxW (mm)	Dimension T (mm)	Lead Space F (mm)	Lead Style Code Bulk	Lead Style Code Taping
RDE5C2A270J0□□H03□	C0G (EIA)	100Vdc	27pF±5%	4.0×3.5	2.5	5.0	K1	M1
RDE5C2A270J0□□H03□	C0G (EIA)	100Vdc	27pF±5%	5.0×3.5	2.5	2.5	P1	S1
RDE5C2A330J0□□H03□	C0G (EIA)	100Vdc	33pF±5%	4.0×3.5	2.5	5.0	K1	M1
RDE5C2A330J0□□H03□	C0G (EIA)	100Vdc	33pF±5%	5.0×3.5	2.5	2.5	P1	S1
RDE5C2A390J0□□H03□	C0G (EIA)	100Vdc	39pF±5%	4.0×3.5	2.5	5.0	K1	M1
RDE5C2A390J0□□H03□	C0G (EIA)	100Vdc	39pF±5%	5.0×3.5	2.5	2.5	P1	S1
RDE5C2A470J0□□H03□	C0G (EIA)	100Vdc	47pF±5%	4.0×3.5	2.5	5.0	K1	M1
RDE5C2A470J0□□H03□	C0G (EIA)	100Vdc	47pF±5%	5.0×3.5	2.5	2.5	P1	S1
RDE5C2A560J0□□H03□	C0G (EIA)	100Vdc	56pF±5%	4.0×3.5	2.5	5.0	K1	M1
RDE5C2A560J0□□H03□	C0G (EIA)	100Vdc	56pF±5%	5.0×3.5	2.5	2.5	P1	S1
RDE5C2A680J0□□H03□	C0G (EIA)	100Vdc	68pF±5%	4.0×3.5	2.5	5.0	K1	M1
RDE5C2A680J0□□H03□	C0G (EIA)	100Vdc	68pF±5%	5.0×3.5	2.5	2.5	P1	S1
RDE5C2A820J0□□H03□	C0G (EIA)	100Vdc	82pF±5%	4.0×3.5	2.5	5.0	K1	M1
RDE5C2A820J0□□H03□	C0G (EIA)	100Vdc	82pF±5%	5.0×3.5	2.5	2.5	P1	S1
RDE5C2A101J0□□H03□	C0G (EIA)	100Vdc	100pF±5%	4.0×3.5	2.5	5.0	K1	M1
RDE5C2A101J0□□H03□	C0G (EIA)	100Vdc	100pF±5%	5.0×3.5	2.5	2.5	P1	S1
RDE5C2A121J0□□H03□	C0G (EIA)	100Vdc	120pF±5%	4.0×3.5	2.5	5.0	K1	M1
RDE5C2A121J0□□H03□	C0G (EIA)	100Vdc	120pF±5%	5.0×3.5	2.5	2.5	P1	S1
RDE5C2A151J0□□H03□	C0G (EIA)	100Vdc	150pF±5%	4.0×3.5	2.5	5.0	K1	M1
RDE5C2A151J0□□H03□	C0G (EIA)	100Vdc	150pF±5%	5.0×3.5	2.5	2.5	P1	S1
RDE5C2A181J0□□H03□	C0G (EIA)	100Vdc	180pF±5%	4.0×3.5	2.5	5.0	K1	M1
RDE5C2A181J0□□H03□	C0G (EIA)	100Vdc	180pF±5%	5.0×3.5	2.5	2.5	P1	S1
RDE5C2A221J0□□H03□	C0G (EIA)	100Vdc	220pF±5%	4.0×3.5	2.5	5.0	K1	M1
RDE5C2A221J0□□H03□	C0G (EIA)	100Vdc	220pF±5%	5.0×3.5	2.5	2.5	P1	S1
RDE5C2A271J0□□H03□	C0G (EIA)	100Vdc	270pF±5%	4.0×3.5	2.5	5.0	K1	M1
RDE5C2A271J0□□H03□	C0G (EIA)	100Vdc	270pF±5%	5.0×3.5	2.5	2.5	P1	S1
RDE5C2A331J0□□H03□	C0G (EIA)	100Vdc	330pF±5%	4.0×3.5	2.5	5.0	K1	M1
RDE5C2A331J0□□H03□	C0G (EIA)	100Vdc	330pF±5%	5.0×3.5	2.5	2.5	P1	S1
RDE5C2A391J0□□H03□	C0G (EIA)	100Vdc	390pF±5%	4.0×3.5	2.5	5.0	K1	M1
RDE5C2A391J0□□H03□	C0G (EIA)	100Vdc	390pF±5%	5.0×3.5	2.5	2.5	P1	S1
RDE5C2A471J0□□H03□	C0G (EIA)	100Vdc	470pF±5%	4.0×3.5	2.5	5.0	K1	M1
RDE5C2A471J0□□H03□	C0G (EIA)	100Vdc	470pF±5%	5.0×3.5	2.5	2.5	P1	S1
RDE5C2A561J0□□H03□	C0G (EIA)	100Vdc	560pF±5%	4.0×3.5	2.5	5.0	K1	M1
RDE5C2A561J0□□H03□	C0G (EIA)	100Vdc	560pF±5%	5.0×3.5	2.5	2.5	P1	S1
RDE5C2A681J0□□H03□	C0G (EIA)	100Vdc	680pF±5%	4.0×3.5	2.5	5.0	K1	M1
RDE5C2A681J0□□H03□	C0G (EIA)	100Vdc	680pF±5%	5.0×3.5	2.5	2.5	P1	S1
RDE5C2A821J0□□H03□	C0G (EIA)	100Vdc	820pF±5%	4.0×3.5	2.5	5.0	K1	M1
RDE5C2A821J0□□H03□	C0G (EIA)	100Vdc	820pF±5%	5.0×3.5	2.5	2.5	P1	S1
RDE5C2A102J0□□H03□	C0G (EIA)	100Vdc	1000pF±5%	4.0×3.5	2.5	5.0	K1	M1
RDE5C2A102J0□□H03□	C0G (EIA)	100Vdc	1000pF±5%	5.0×3.5	2.5	2.5	P1	S1
RDE5C2A122J0□□H03□	C0G (EIA)	100Vdc	1200pF±5%	4.0×3.5	2.5	5.0	K1	M1
RDE5C2A122J0□□H03□	C0G (EIA)	100Vdc	1200pF±5%	5.0×3.5	2.5	2.5	P1	S1
RDE5C2A152J0□□H03□	C0G (EIA)	100Vdc	1500pF±5%	4.0×3.5	2.5	5.0	K1	M1
RDE5C2A152J0□□H03□	C0G (EIA)	100Vdc	1500pF±5%	5.0×3.5	2.5	2.5	P1	S1
RDE5C2A182J1□□H03□	C0G (EIA)	100Vdc	1800pF±5%	4.5×3.5	3.15	5.0	K1	M1
RDE5C2A182J1□□H03□	C0G (EIA)	100Vdc	1800pF±5%	5.0×3.5	3.15	2.5	P1	S1
RDE5C2A222J1□□H03□	C0G (EIA)	100Vdc	2200pF±5%	4.5×3.5	3.15	5.0	K1	M1
RDE5C2A222J1□□H03□	C0G (EIA)	100Vdc	2200pF±5%	5.0×3.5	3.15	2.5	P1	S1
RDE5C2A272J1□□H03□	C0G (EIA)	100Vdc	2700pF±5%	4.5×3.5	3.15	5.0	K1	M1
RDE5C2A272J1□□H03□	C0G (EIA)	100Vdc	2700pF±5%	5.0×3.5	3.15	2.5	P1	S1
RDE5C2A332J1□□H03□	C0G (EIA)	100Vdc	3300pF±5%	4.5×3.5	3.15	5.0	K1	M1
RDE5C2A332J1□□H03□	C0G (EIA)	100Vdc	3300pF±5%	5.0×3.5	3.15	2.5	P1	S1
RDE7U2E101J1□□H03□	U2J (EIA)	250Vdc	100pF±5%	4.5×3.5	3.15	5.0	K1	M1
RDE7U2E151J1□□H03□	U2J (EIA)	250Vdc	150pF±5%	4.5×3.5	3.15	5.0	K1	M1
RDE7U2E221J1□□H03□	U2J (EIA)	250Vdc	220pF±5%	4.5×3.5	3.15	5.0	K1	M1
RDE7U2E331J1□□H03□	U2J (EIA)	250Vdc	330pF±5%	4.5×3.5	3.15	5.0	K1	M1
RDE7U2E471J1□□H03□	U2J (EIA)	250Vdc	470pF±5%	4.5×3.5	3.15	5.0	K1	M1

Continued on the following page.

Continued from the preceding page.

Part Number	Temp. Char.	Rated Voltage	Capacitance	Dimensions LxW (mm)	Dimension T (mm)	Lead Space F (mm)	Lead Style Code Bulk	Lead Style Code Taping
RDE7U2E681J1□□H03□	U2J (EIA)	250Vdc	680pF±5%	4.5×3.5	3.15	5.0	K1	M1
RDE7U2E102J1□□H03□	U2J (EIA)	250Vdc	1000pF±5%	4.5×3.5	3.15	5.0	K1	M1
RDE7U2E152J1□□H03□	U2J (EIA)	250Vdc	1500pF±5%	4.5×3.5	3.15	5.0	K1	M1
RDE7U2E222J1□□H03□	U2J (EIA)	250Vdc	2200pF±5%	4.5×3.5	3.15	5.0	K1	M1
RDE7U2E332J1□□H03□	U2J (EIA)	250Vdc	3300pF±5%	4.5×3.5	3.15	5.0	K1	M1
RDE7U2E472J1□□H03□	U2J (EIA)	250Vdc	4700pF±5%	4.5×3.5	3.15	5.0	K1	M1
RDE7U2E682J2□□H03□	U2J (EIA)	250Vdc	6800pF±5%	5.5×4.0	3.15	5.0	K1	M1
RDE7U2E103J2□□H03□	U2J (EIA)	250Vdc	10000pF±5%	5.5×4.0	3.15	5.0	K1	M1
RDE7U2E153J2□□H03□	U2J (EIA)	250Vdc	15000pF±5%	5.5×4.0	3.15	5.0	K1	M1
RDE7U2E223J2□□H03□	U2J (EIA)	250Vdc	22000pF±5%	5.5×4.0	3.15	5.0	K1	M1
RDE7U2E333J3□□H03□	U2J (EIA)	250Vdc	33000pF±5%	5.5×5.0	4.0	5.0	K1	M1
RDE7U2E473J3□□H03□	U2J (EIA)	250Vdc	47000pF±5%	5.5×5.0	4.0	5.0	K1	M1
RDE7U2J100J2□□H03□	U2J (EIA)	630Vdc	10pF±5%	5.5×4.0	3.15	5.0	K1	M1
RDE7U2J150J2□□H03□	U2J (EIA)	630Vdc	15pF±5%	5.5×4.0	3.15	5.0	K1	M1
RDE7U2J220J2□□H03□	U2J (EIA)	630Vdc	22pF±5%	5.5×4.0	3.15	5.0	K1	M1
RDE7U2J330J2□□H03□	U2J (EIA)	630Vdc	33pF±5%	5.5×4.0	3.15	5.0	K1	M1
RDE7U2J470J2□□H03□	U2J (EIA)	630Vdc	47pF±5%	5.5×4.0	3.15	5.0	K1	M1
RDE7U2J680J2□□H03□	U2J (EIA)	630Vdc	68pF±5%	5.5×4.0	3.15	5.0	K1	M1
RDE7U2J101J2□□H03□	U2J (EIA)	630Vdc	100pF±5%	5.5×4.0	3.15	5.0	K1	M1
RDE7U2J151J2□□H03□	U2J (EIA)	630Vdc	150pF±5%	5.5×4.0	3.15	5.0	K1	M1
RDE7U2J221J2□□H03□	U2J (EIA)	630Vdc	220pF±5%	5.5×4.0	3.15	5.0	K1	M1
RDE7U2J331J2□□H03□	U2J (EIA)	630Vdc	330pF±5%	5.5×4.0	3.15	5.0	K1	M1
RDE7U2J471J2□□H03□	U2J (EIA)	630Vdc	470pF±5%	5.5×4.0	3.15	5.0	K1	M1
RDE7U2J681J2□□H03□	U2J (EIA)	630Vdc	680pF±5%	5.5×4.0	3.15	5.0	K1	M1
RDE7U2J102J2□□H03□	U2J (EIA)	630Vdc	1000pF±5%	5.5×4.0	3.15	5.0	K1	M1
RDE7U2J152J2□□H03□	U2J (EIA)	630Vdc	1500pF±5%	5.5×4.0	3.15	5.0	K1	M1
RDE7U2J222J2□□H03□	U2J (EIA)	630Vdc	2200pF±5%	5.5×4.0	3.15	5.0	K1	M1
RDE7U2J332J2□□H03□	U2J (EIA)	630Vdc	3300pF±5%	5.5×4.0	3.15	5.0	K1	M1
RDE7U2J472J2□□H03□	U2J (EIA)	630Vdc	4700pF±5%	5.5×4.0	3.15	5.0	K1	M1
RDE7U2J682J3□□H03□	U2J (EIA)	630Vdc	6800pF±5%	5.5×5.0	4.0	5.0	K1	M1
RDE7U2J103J3□□H03□	U2J (EIA)	630Vdc	10000pF±5%	5.5×5.0	4.0	5.0	K1	M1
RDE7U2J153J4□□H03□	U2J (EIA)	630Vdc	15000pF±5%	7.5×5.5	4.0	5.0	K1	M1
RDE7U2J223J4□□H03□	U2J (EIA)	630Vdc	22000pF±5%	7.5×5.5	4.0	5.0	K1	M1
RDE7U2J333J5□□H03□	U2J (EIA)	630Vdc	33000pF±5%	7.5×8.0	4.0	5.0	B1	E1
RDE7U2J473J5□□H03□	U2J (EIA)	630Vdc	47000pF±5%	7.5×8.0	4.0	5.0	B1	E1
RDE7U2J943JU□□H03□	U2J (EIA)	630Vdc	94000pF±5%	7.7×13.0	4.0	5.0	B1	E1
RDE7U3A100J2□□H03□	U2J (EIA)	1000Vdc	10pF±5%	5.5×4.0	3.15	5.0	K1	M1
RDE7U3A150J2□□H03□	U2J (EIA)	1000Vdc	15pF±5%	5.5×4.0	3.15	5.0	K1	M1
RDE7U3A220J2□□H03□	U2J (EIA)	1000Vdc	22pF±5%	5.5×4.0	3.15	5.0	K1	M1
RDE7U3A330J2□□H03□	U2J (EIA)	1000Vdc	33pF±5%	5.5×4.0	3.15	5.0	K1	M1
RDE7U3A470J2□□H03□	U2J (EIA)	1000Vdc	47pF±5%	5.5×4.0	3.15	5.0	K1	M1
RDE7U3A680J2□□H03□	U2J (EIA)	1000Vdc	68pF±5%	5.5×4.0	3.15	5.0	K1	M1
RDE7U3A101J2□□H03□	U2J (EIA)	1000Vdc	100pF±5%	5.5×4.0	3.15	5.0	K1	M1
RDE7U3A151J2□□H03□	U2J (EIA)	1000Vdc	150pF±5%	5.5×4.0	3.15	5.0	K1	M1
RDE7U3A221J2□□H03□	U2J (EIA)	1000Vdc	220pF±5%	5.5×4.0	3.15	5.0	K1	M1
RDE7U3A331J2□□H03□	U2J (EIA)	1000Vdc	330pF±5%	5.5×4.0	3.15	5.0	K1	M1
RDE7U3A471J2□□H03□	U2J (EIA)	1000Vdc	470pF±5%	5.5×4.0	3.15	5.0	K1	M1
RDE7U3A681J2□□H03□	U2J (EIA)	1000Vdc	680pF±5%	5.5×4.0	3.15	5.0	K1	M1
RDE7U3A102J2□□H03□	U2J (EIA)	1000Vdc	1000pF±5%	5.5×4.0	3.15	5.0	K1	M1
RDE7U3A152J3□□H03□	U2J (EIA)	1000Vdc	1500pF±5%	5.5×5.0	4.0	5.0	K1	M1
RDE7U3A222J3□□H03□	U2J (EIA)	1000Vdc	2200pF±5%	5.5×5.0	4.0	5.0	K1	M1
RDE7U3A332J4□□H03□	U2J (EIA)	1000Vdc	3300pF±5%	7.5×5.5	4.0	5.0	K1	M1
RDE7U3A472J4□□H03□	U2J (EIA)	1000Vdc	4700pF±5%	7.5×5.5	4.0	5.0	K1	M1
RDE7U3A682J5□□H03□	U2J (EIA)	1000Vdc	6800pF±5%	7.5×8.0	4.0	5.0	B1	E1
RDE7U3A103J5□□H03□	U2J (EIA)	1000Vdc	10000pF±5%	7.5×8.0	4.0	5.0	B1	E1
RDE7U3A203JU□□H03□	U2J (EIA)	1000Vdc	20000pF±5%	7.7×13.0	4.0	5.0	B1	E1

Two blank columns are filled with the lead style code. Please refer to the 3 columns on the right for the appropriate code.
The last blank column is filled with the packaging code. (B: bulk, A: ammo pack)

High Dielectric Constant Type, X7R/X7S Characteristics

Part Number	Temp. Char.	Rated Voltage	Capacitance	Dimensions LxW (mm)	Dimension T (mm)	Lead Space F (mm)	Lead Style Code Bulk	Lead Style Code Taping
RDER71E104K0□□H03□	X7R (EIA)	25Vdc	0.1μF±10%	4.0×3.5	2.5	5.0	K1	M1
RDER71E104K0□□H03□	X7R (EIA)	25Vdc	0.1μF±10%	5.0×3.5	2.5	2.5	P1	S1
RDEC71E224K0□□H03□	X7S (EIA)	25Vdc	0.22μF±10%	4.0×3.5	2.5	5.0	K1	M1
RDEC71E224K0□□H03□	X7S (EIA)	25Vdc	0.22μF±10%	5.0×3.5	2.5	2.5	P1	S1
RDEC71E474K0□□H03□	X7S (EIA)	25Vdc	0.47μF±10%	4.0×3.5	2.5	5.0	K1	M1
RDEC71E474K0□□H03□	X7S (EIA)	25Vdc	0.47μF±10%	5.0×3.5	2.5	2.5	P1	S1
RDEC71E105K0□□H03□	X7S (EIA)	25Vdc	1.0μF±10%	4.0×3.5	2.5	5.0	K1	M1
RDEC71E105K0□□H03□	X7S (EIA)	25Vdc	1.0μF±10%	5.0×3.5	2.5	2.5	P1	S1
RDEC71E225K1□□H03□	X7S (EIA)	25Vdc	2.2μF±10%	4.5×3.5	3.15	5.0	K1	M1
RDEC71E225K1□□H03□	X7S (EIA)	25Vdc	2.2μF±10%	5.0×3.5	3.15	2.5	P1	S1
RDEC71E475K2□□H03□	X7S (EIA)	25Vdc	4.7μF±10%	5.5×4.0	3.15	2.5	P1	S1
RDEC71E475K2□□H03□	X7S (EIA)	25Vdc	4.7μF±10%	5.5×4.0	3.15	5.0	K1	M1
RDEC71E106K2□□H03□	X7S (EIA)	25Vdc	10μF±10%	5.5×4.0	3.15	2.5	P1	S1
RDEC71E106K2□□H03□	X7S (EIA)	25Vdc	10μF±10%	5.5×4.0	3.15	5.0	K1	M1
RDEC71E226K3□□H03□	X7S (EIA)	25Vdc	22μF±10%	5.5×5.0	4.0	2.5	P1	S1
RDEC71E226K3□□H03□	X7S (EIA)	25Vdc	22μF±10%	5.5×5.0	4.0	5.0	K1	M1
RDEC71E476MW□□H03□	X7S (EIA)	25Vdc	47μF±20%	5.5×7.5	4.0	5.0	K1	M1
RDER71H221K0□□H03□	X7R (EIA)	50Vdc	220pF±10%	4.0×3.5	2.5	5.0	K1	M1
RDER71H221K0□□H03□	X7R (EIA)	50Vdc	220pF±10%	5.0×3.5	2.5	2.5	P1	S1
RDER71H331K0□□H03□	X7R (EIA)	50Vdc	330pF±10%	4.0×3.5	2.5	5.0	K1	M1
RDER71H331K0□□H03□	X7R (EIA)	50Vdc	330pF±10%	5.0×3.5	2.5	2.5	P1	S1
RDER71H471K0□□H03□	X7R (EIA)	50Vdc	470pF±10%	4.0×3.5	2.5	5.0	K1	M1
RDER71H471K0□□H03□	X7R (EIA)	50Vdc	470pF±10%	5.0×3.5	2.5	2.5	P1	S1
RDER71H681K0□□H03□	X7R (EIA)	50Vdc	680pF±10%	4.0×3.5	2.5	5.0	K1	M1
RDER71H681K0□□H03□	X7R (EIA)	50Vdc	680pF±10%	5.0×3.5	2.5	2.5	P1	S1
RDER71H102K0□□H03□	X7R (EIA)	50Vdc	1000pF±10%	4.0×3.5	2.5	5.0	K1	M1
RDER71H102K0□□H03□	X7R (EIA)	50Vdc	1000pF±10%	5.0×3.5	2.5	2.5	P1	S1
RDER71H152K0□□H03□	X7R (EIA)	50Vdc	1500pF±10%	4.0×3.5	2.5	5.0	K1	M1
RDER71H152K0□□H03□	X7R (EIA)	50Vdc	1500pF±10%	5.0×3.5	2.5	2.5	P1	S1
RDER71H222K0□□H03□	X7R (EIA)	50Vdc	2200pF±10%	4.0×3.5	2.5	5.0	K1	M1
RDER71H222K0□□H03□	X7R (EIA)	50Vdc	2200pF±10%	5.0×3.5	2.5	2.5	P1	S1
RDER71H332K0□□H03□	X7R (EIA)	50Vdc	3300pF±10%	4.0×3.5	2.5	5.0	K1	M1
RDER71H332K0□□H03□	X7R (EIA)	50Vdc	3300pF±10%	5.0×3.5	2.5	2.5	P1	S1
RDER71H472K0□□H03□	X7R (EIA)	50Vdc	4700pF±10%	4.0×3.5	2.5	5.0	K1	M1
RDER71H472K0□□H03□	X7R (EIA)	50Vdc	4700pF±10%	5.0×3.5	2.5	2.5	P1	S1
RDER71H682K0□□H03□	X7R (EIA)	50Vdc	6800pF±10%	4.0×3.5	2.5	5.0	K1	M1
RDER71H682K0□□H03□	X7R (EIA)	50Vdc	6800pF±10%	5.0×3.5	2.5	2.5	P1	S1
RDER71H103K0□□H03□	X7R (EIA)	50Vdc	10000pF±10%	4.0×3.5	2.5	5.0	K1	M1
RDER71H103K0□□H03□	X7R (EIA)	50Vdc	10000pF±10%	5.0×3.5	2.5	2.5	P1	S1
RDER71H153K0□□H03□	X7R (EIA)	50Vdc	15000pF±10%	4.0×3.5	2.5	5.0	K1	M1
RDER71H153K0□□H03□	X7R (EIA)	50Vdc	15000pF±10%	5.0×3.5	2.5	2.5	P1	S1
RDER71H223K0□□H03□	X7R (EIA)	50Vdc	22000pF±10%	4.0×3.5	2.5	5.0	K1	M1
RDER71H223K0□□H03□	X7R (EIA)	50Vdc	22000pF±10%	5.0×3.5	2.5	2.5	P1	S1
RDER71H333K0□□H03□	X7R (EIA)	50Vdc	33000pF±10%	4.0×3.5	2.5	5.0	K1	M1
RDER71H333K0□□H03□	X7R (EIA)	50Vdc	33000pF±10%	5.0×3.5	2.5	2.5	P1	S1
RDER71H473K0□□H03□	X7R (EIA)	50Vdc	47000pF±10%	4.0×3.5	2.5	5.0	K1	M1
RDER71H473K0□□H03□	X7R (EIA)	50Vdc	47000pF±10%	5.0×3.5	2.5	2.5	P1	S1
RDER71H683K0□□H03□	X7R (EIA)	50Vdc	68000pF±10%	4.0×3.5	2.5	5.0	K1	M1
RDER71H683K0□□H03□	X7R (EIA)	50Vdc	68000pF±10%	5.0×3.5	2.5	2.5	P1	S1
RDER71H104K0□□H03□	X7R (EIA)	50Vdc	0.1μF±10%	4.0×3.5	2.5	5.0	K1	M1
RDER71H104K0□□H03□	X7R (EIA)	50Vdc	0.1μF±10%	5.0×3.5	2.5	2.5	P1	S1
RDER71H154K1□□H03□	X7R (EIA)	50Vdc	0.15μF±10%	4.5×3.5	3.15	5.0	K1	M1
RDER71H154K1□□H03□	X7R (EIA)	50Vdc	0.15μF±10%	5.0×3.5	3.15	2.5	P1	S1
RDER71H224K1□□H03□	X7R (EIA)	50Vdc	0.22μF±10%	4.5×3.5	3.15	5.0	K1	M1
RDER71H224K1□□H03□	X7R (EIA)	50Vdc	0.22μF±10%	5.0×3.5	3.15	2.5	P1	S1

Continued on the following page.

Continued from the preceding page.

Part Number	Temp. Char.	Rated Voltage	Capacitance	Dimensions LxW (mm)	Dimension T (mm)	Lead Space F (mm)	Lead Style Code Bulk	Lead Style Code Taping
RDER71H334K1□□H03□	X7R (EIA)	50Vdc	0.33μF±10%	4.5×3.5	3.15	5.0	K1	M1
RDER71H334K1□□H03□	X7R (EIA)	50Vdc	0.33μF±10%	5.0×3.5	3.15	2.5	P1	S1
RDER71H474K1□□H03□	X7R (EIA)	50Vdc	0.47μF±10%	4.5×3.5	3.15	5.0	K1	M1
RDER71H474K1□□H03□	X7R (EIA)	50Vdc	0.47μF±10%	5.0×3.5	3.15	2.5	P1	S1
RDER71H684K2□□H03□	X7R (EIA)	50Vdc	0.68μF±10%	5.5×4.0	3.15	2.5	P1	S1
RDER71H684K2□□H03□	X7R (EIA)	50Vdc	0.68μF±10%	5.5×4.0	3.15	5.0	K1	M1
RDER71H105K2□□H03□	X7R (EIA)	50Vdc	1.0μF±10%	5.5×4.0	3.15	2.5	P1	S1
RDER71H105K2□□H03□	X7R (EIA)	50Vdc	1.0μF±10%	5.5×4.0	3.15	5.0	K1	M1
RDER71H155K2□□H03□	X7R (EIA)	50Vdc	1.5μF±10%	5.5×4.0	3.15	2.5	P1	S1
RDER71H155K2□□H03□	X7R (EIA)	50Vdc	1.5μF±10%	5.5×4.0	3.15	5.0	K1	M1
RDER71H225K2□□H03□	X7R (EIA)	50Vdc	2.2μF±10%	5.5×4.0	3.15	2.5	P1	S1
RDER71H225K2□□H03□	X7R (EIA)	50Vdc	2.2μF±10%	5.5×4.0	3.15	5.0	K1	M1
RDER71H335K3□□H03□	X7R (EIA)	50Vdc	3.3μF±10%	5.5×5.0	4.0	2.5	P1	S1
RDER71H335K3□□H03□	X7R (EIA)	50Vdc	3.3μF±10%	5.5×5.0	4.0	5.0	K1	M1
RDEC71H475K2□□H03□	X7S (EIA)	50Vdc	4.7μF±10%	5.5×4.0	3.15	2.5	P1	S1
RDEC71H475K2□□H03□	X7S (EIA)	50Vdc	4.7μF±10%	5.5×4.0	3.15	5.0	K1	M1
RDEC71H106K3□□H03□	X7S (EIA)	50Vdc	10μF±10%	5.5×5.0	4.0	2.5	P1	S1
RDEC71H106K3□□H03□	X7S (EIA)	50Vdc	10μF±10%	5.5×5.0	4.0	5.0	K1	M1
RDEC71H226MW□□H03□	X7S (EIA)	50Vdc	22μF±20%	5.5×7.5	4.0	5.0	K1	M1
RDER72A221K0□□H03□	X7R (EIA)	100Vdc	220pF±10%	4.0×3.5	2.5	5.0	K1	M1
RDER72A221K0□□H03□	X7R (EIA)	100Vdc	220pF±10%	5.0×3.5	2.5	2.5	P1	S1
RDER72A331K0□□H03□	X7R (EIA)	100Vdc	330pF±10%	4.0×3.5	2.5	5.0	K1	M1
RDER72A331K0□□H03□	X7R (EIA)	100Vdc	330pF±10%	5.0×3.5	2.5	2.5	P1	S1
RDER72A471K0□□H03□	X7R (EIA)	100Vdc	470pF±10%	4.0×3.5	2.5	5.0	K1	M1
RDER72A471K0□□H03□	X7R (EIA)	100Vdc	470pF±10%	5.0×3.5	2.5	2.5	P1	S1
RDER72A681K0□□H03□	X7R (EIA)	100Vdc	680pF±10%	4.0×3.5	2.5	5.0	K1	M1
RDER72A681K0□□H03□	X7R (EIA)	100Vdc	680pF±10%	5.0×3.5	2.5	2.5	P1	S1
RDER72A102K0□□H03□	X7R (EIA)	100Vdc	1000pF±10%	4.0×3.5	2.5	5.0	K1	M1
RDER72A102K0□□H03□	X7R (EIA)	100Vdc	1000pF±10%	5.0×3.5	2.5	2.5	P1	S1
RDER72A152K0□□H03□	X7R (EIA)	100Vdc	1500pF±10%	4.0×3.5	2.5	5.0	K1	M1
RDER72A152K0□□H03□	X7R (EIA)	100Vdc	1500pF±10%	5.0×3.5	2.5	2.5	P1	S1
RDER72A222K0□□H03□	X7R (EIA)	100Vdc	2200pF±10%	4.0×3.5	2.5	5.0	K1	M1
RDER72A222K0□□H03□	X7R (EIA)	100Vdc	2200pF±10%	5.0×3.5	2.5	2.5	P1	S1
RDER72A332K0□□H03□	X7R (EIA)	100Vdc	3300pF±10%	4.0×3.5	2.5	5.0	K1	M1
RDER72A332K0□□H03□	X7R (EIA)	100Vdc	3300pF±10%	5.0×3.5	2.5	2.5	P1	S1
RDER72A472K0□□H03□	X7R (EIA)	100Vdc	4700pF±10%	4.0×3.5	2.5	5.0	K1	M1
RDER72A472K0□□H03□	X7R (EIA)	100Vdc	4700pF±10%	5.0×3.5	2.5	2.5	P1	S1
RDER72A682K0□□H03□	X7R (EIA)	100Vdc	6800pF±10%	4.0×3.5	2.5	5.0	K1	M1
RDER72A682K0□□H03□	X7R (EIA)	100Vdc	6800pF±10%	5.0×3.5	2.5	2.5	P1	S1
RDER72A103K0□□H03□	X7R (EIA)	100Vdc	10000pF±10%	4.0×3.5	2.5	5.0	K1	M1
RDER72A103K0□□H03□	X7R (EIA)	100Vdc	10000pF±10%	5.0×3.5	2.5	2.5	P1	S1
RDER72A153K0□□H03□	X7R (EIA)	100Vdc	15000pF±10%	4.0×3.5	2.5	5.0	K1	M1
RDER72A153K0□□H03□	X7R (EIA)	100Vdc	15000pF±10%	5.0×3.5	2.5	2.5	P1	S1
RDER72A223K0□□H03□	X7R (EIA)	100Vdc	22000pF±10%	4.0×3.5	2.5	5.0	K1	M1
RDER72A223K0□□H03□	X7R (EIA)	100Vdc	22000pF±10%	5.0×3.5	2.5	2.5	P1	S1
RDER72A333K1□□H03□	X7R (EIA)	100Vdc	33000pF±10%	4.5×3.5	3.15	5.0	K1	M1
RDER72A333K1□□H03□	X7R (EIA)	100Vdc	33000pF±10%	5.0×3.5	3.15	2.5	P1	S1
RDER72A473K1□□H03□	X7R (EIA)	100Vdc	47000pF±10%	4.5×3.5	3.15	5.0	K1	M1
RDER72A473K1□□H03□	X7R (EIA)	100Vdc	47000pF±10%	5.0×3.5	3.15	2.5	P1	S1
RDER72A683K1□□H03□	X7R (EIA)	100Vdc	68000pF±10%	4.5×3.5	3.15	5.0	K1	M1
RDER72A683K1□□H03□	X7R (EIA)	100Vdc	68000pF±10%	5.0×3.5	3.15	2.5	P1	S1
RDER72A104K1□□H03□	X7R (EIA)	100Vdc	0.1μF±10%	4.5×3.5	3.15	5.0	K1	M1
RDER72A104K1□□H03□	X7R (EIA)	100Vdc	0.1μF±10%	5.0×3.5	3.15	2.5	P1	S1
RDER72A154K2□□H03□	X7R (EIA)	100Vdc	0.15μF±10%	5.5×4.0	3.15	2.5	P1	S1
RDER72A154K2□□H03□	X7R (EIA)	100Vdc	0.15μF±10%	5.5×4.0	3.15	5.0	K1	M1
RDER72A224K1□□H03□	X7R (EIA)	100Vdc	0.22μF±10%	4.5×3.5	3.15	5.0	K1	M1
RDER72A224K1□□H03□	X7R (EIA)	100Vdc	0.22μF±10%	5.0×3.5	3.15	2.5	P1	S1

Continued on the following page.

Continued from the preceding page.

Part Number	Temp. Char.	Rated Voltage	Capacitance	Dimensions LxW (mm)	Dimension T (mm)	Lead Space F (mm)	Lead Style Code Bulk	Lead Style Code Taping
RDER72A334K1□□H03□	X7R (EIA)	100Vdc	0.33μF±10%	4.5×3.5	3.15	5.0	K1	M1
RDER72A334K1□□H03□	X7R (EIA)	100Vdc	0.33μF±10%	5.0×3.5	3.15	2.5	P1	S1
RDER72A474K1□□H03□	X7R (EIA)	100Vdc	0.47μF±10%	4.5×3.5	3.15	5.0	K1	M1
RDER72A474K1□□H03□	X7R (EIA)	100Vdc	0.47μF±10%	5.0×3.5	3.15	2.5	P1	S1
RDER72A684K2□□H03□	X7R (EIA)	100Vdc	0.68μF±10%	5.5×4.0	3.15	2.5	P1	S1
RDER72A684K2□□H03□	X7R (EIA)	100Vdc	0.68μF±10%	5.5×4.0	3.15	5.0	K1	M1
RDER72A105K2□□H03□	X7R (EIA)	100Vdc	1.0μF±10%	5.5×4.0	3.15	2.5	P1	S1
RDER72A105K2□□H03□	X7R (EIA)	100Vdc	1.0μF±10%	5.5×4.0	3.15	5.0	K1	M1
RDEC72A155K3□□H03□	X7S (EIA)	100Vdc	1.5μF±10%	5.5×5.0	4.0	2.5	P1	S1
RDEC72A155K3□□H03□	X7S (EIA)	100Vdc	1.5μF±10%	5.5×5.0	4.0	5.0	K1	M1
RDEC72A225K3□□H03□	X7S (EIA)	100Vdc	2.2μF±10%	5.5×5.0	4.0	2.5	P1	S1
RDEC72A225K3□□H03□	X7S (EIA)	100Vdc	2.2μF±10%	5.5×5.0	4.0	5.0	K1	M1
RDEC72A475MW□□H03□	X7S (EIA)	100Vdc	4.7μF±20%	5.5×7.5	4.0	5.0	K1	M1
RDER72E102K1□□H03□	X7R (EIA)	250Vdc	1000pF±10%	4.5×3.5	3.15	5.0	K1	M1
RDER72E152K1□□H03□	X7R (EIA)	250Vdc	1500pF±10%	4.5×3.5	3.15	5.0	K1	M1
RDER72E222K1□□H03□	X7R (EIA)	250Vdc	2200pF±10%	4.5×3.5	3.15	5.0	K1	M1
RDER72E332K1□□H03□	X7R (EIA)	250Vdc	3300pF±10%	4.5×3.5	3.15	5.0	K1	M1
RDER72E472K1□□H03□	X7R (EIA)	250Vdc	4700pF±10%	4.5×3.5	3.15	5.0	K1	M1
RDER72E682K1□□H03□	X7R (EIA)	250Vdc	6800pF±10%	4.5×3.5	3.15	5.0	K1	M1
RDER72E103K1□□H03□	X7R (EIA)	250Vdc	10000pF±10%	4.5×3.5	3.15	5.0	K1	M1
RDER72E153K1□□H03□	X7R (EIA)	250Vdc	15000pF±10%	4.5×3.5	3.15	5.0	K1	M1
RDER72E223K1□□H03□	X7R (EIA)	250Vdc	22000pF±10%	4.5×3.5	3.15	5.0	K1	M1
RDER72E333K2□□H03□	X7R (EIA)	250Vdc	33000pF±10%	5.5×4.0	3.15	5.0	K1	M1
RDER72E473K2□□H03□	X7R (EIA)	250Vdc	47000pF±10%	5.5×4.0	3.15	5.0	K1	M1
RDER72E683K2□□H03□	X7R (EIA)	250Vdc	68000pF±10%	5.5×4.0	3.15	5.0	K1	M1
RDER72E104K2□□H03□	X7R (EIA)	250Vdc	0.10μF±10%	5.5×4.0	3.15	5.0	K1	M1
RDER72E154K3□□H03□	X7R (EIA)	250Vdc	0.15μF±10%	5.5×5.0	3.15	5.0	K1	M1
RDER72E224K3□□H03□	X7R (EIA)	250Vdc	0.22μF±10%	5.5×5.0	3.15	5.0	K1	M1
RDER72E334K4□□H03□	X7R (EIA)	250Vdc	0.33μF±10%	7.5×5.5	4.0	5.0	K1	M1
RDER72E474K4□□H03□	X7R (EIA)	250Vdc	0.47μF±10%	7.5×5.5	4.0	5.0	K1	M1
RDER72E684K5□□H03□	X7R (EIA)	250Vdc	0.68μF±10%	7.5×7.5	4.0	5.0	B1	E1
RDER72E105K5□□H03□	X7R (EIA)	250Vdc	1.0μF±10%	7.5×7.5	4.0	5.0	B1	E1
RDER72E225MU□□H03□	X7R (EIA)	250Vdc	2.2μF±20%	7.7×12.5	4.0	5.0	B1	E1
RDER72J102K2□□H03□	X7R (EIA)	630Vdc	1000pF±10%	5.5×4.0	3.15	5.0	K1	M1
RDER72J152K2□□H03□	X7R (EIA)	630Vdc	1500pF±10%	5.5×4.0	3.15	5.0	K1	M1
RDER72J222K2□□H03□	X7R (EIA)	630Vdc	2200pF±10%	5.5×4.0	3.15	5.0	K1	M1
RDER72J332K2□□H03□	X7R (EIA)	630Vdc	3300pF±10%	5.5×4.0	3.15	5.0	K1	M1
RDER72J472K2□□H03□	X7R (EIA)	630Vdc	4700pF±10%	5.5×4.0	3.15	5.0	K1	M1
RDER72J682K2□□H03□	X7R (EIA)	630Vdc	6800pF±10%	5.5×4.0	3.15	5.0	K1	M1
RDER72J103K2□□H03□	X7R (EIA)	630Vdc	10000pF±10%	5.5×4.0	3.15	5.0	K1	M1
RDER72J153K2□□H03□	X7R (EIA)	630Vdc	15000pF±10%	5.5×4.0	3.15	5.0	K1	M1
RDER72J223K2□□H03□	X7R (EIA)	630Vdc	22000pF±10%	5.5×4.0	3.15	5.0	K1	M1
RDER72J333K3□□H03□	X7R (EIA)	630Vdc	33000pF±10%	5.5×5.0	3.15	5.0	K1	M1
RDER72J473K3□□H03□	X7R (EIA)	630Vdc	47000pF±10%	5.5×5.0	3.15	5.0	K1	M1
RDER72J683K4□□H03□	X7R (EIA)	630Vdc	68000pF±10%	7.5×5.5	3.15	5.0	K1	M1
RDER72J104K4□□H03□	X7R (EIA)	630Vdc	0.10μF±10%	7.5×5.5	3.15	5.0	K1	M1
RDER72J154K5□□H03□	X7R (EIA)	630Vdc	0.15μF±10%	7.5×8.0	4.0	5.0	B1	E1
RDER72J224K5□□H03□	X7R (EIA)	630Vdc	0.22μF±10%	7.5×8.0	4.0	5.0	B1	E1
RDER72J474MU□□H03□	X7R (EIA)	630Vdc	0.47μF±20%	7.7×13.0	4.0	5.0	B1	E1
RDER73A471K2□□H03□	X7R (EIA)	1000Vdc	470pF±10%	5.5×4.0	3.15	5.0	K1	M1
RDER73A681K2□□H03□	X7R (EIA)	1000Vdc	680pF±10%	5.5×4.0	3.15	5.0	K1	M1
RDER73A102K2□□H03□	X7R (EIA)	1000Vdc	1000pF±10%	5.5×4.0	3.15	5.0	K1	M1
RDER73A152K2□□H03□	X7R (EIA)	1000Vdc	1500pF±10%	5.5×4.0	3.15	5.0	K1	M1
RDER73A222K2□□H03□	X7R (EIA)	1000Vdc	2200pF±10%	5.5×4.0	3.15	5.0	K1	M1
RDER73A332K2□□H03□	X7R (EIA)	1000Vdc	3300pF±10%	5.5×4.0	3.15	5.0	K1	M1
RDER73A472K2□□H03□	X7R (EIA)	1000Vdc	4700pF±10%	5.5×4.0	3.15	5.0	K1	M1
RDER73A682K2□□H03□	X7R (EIA)	1000Vdc	6800pF±10%	5.5×4.0	3.15	5.0	K1	M1

Continued on the following page.

Continued from the preceding page.

Part Number	Temp. Char.	Rated Voltage	Capacitance	Dimensions LxW (mm)	Dimension T (mm)	Lead Space F (mm)	Lead Style Code Bulk	Lead Style Code Taping
RDER73A103K2□□H03□	X7R (EIA)	1000Vdc	10000pF±10%	5.5×4.0	3.15	5.0	K1	M1
RDER73A153K3□□H03□	X7R (EIA)	1000Vdc	15000pF±10%	5.5×5.0	4.0	5.0	K1	M1
RDER73A223K3□□H03□	X7R (EIA)	1000Vdc	22000pF±10%	5.5×5.0	4.0	5.0	K1	M1
RDER73A333K4□□H03□	X7R (EIA)	1000Vdc	33000pF±10%	7.5×5.5	4.0	5.0	K1	M1
RDER73A473K4□□H03□	X7R (EIA)	1000Vdc	47000pF±10%	7.5×5.5	4.0	5.0	K1	M1
RDER73A683K5□□H03□	X7R (EIA)	1000Vdc	68000pF±10%	7.5×8.0	4.0	5.0	B1	E1
RDER73A104K5□□H03□	X7R (EIA)	1000Vdc	0.10μF±10%	7.5×8.0	4.0	5.0	B1	E1
RDER73A224MU□□H03□	X7R (EIA)	1000Vdc	0.22μF±20%	7.7×13.0	4.0	5.0	B1	E1

Two blank columns are filled with the lead style code. Please refer to the 3 columns on the right for the appropriate code.
The last blank column is filled with the packaging code. (B: bulk, A: ammo pack)

High Dielectric Constant Type, F/Y5V Characteristics

Part Number	Temp. Char.	Rated Voltage	Capacitance	Dimensions LxW (mm)	Dimension T (mm)	Lead Space F (mm)	Lead Style Code Bulk	Lead Style Code Taping
RDEF11H103Z0□□H01□	F (JIS)	50Vdc	10000pF+80/-20%	4.0×3.5	2.5	5.0	K1	M1
RDEF11H103Z0□□H01□	F (JIS)	50Vdc	10000pF+80/-20%	5.0×3.5	2.5	2.5	P1	S1
RDEF51H103Z0□□H03□	Y5V (EIA)	50Vdc	10000pF+80/-20%	4.0×3.5	2.5	5.0	K1	M1
RDEF51H103Z0□□H03□	Y5V (EIA)	50Vdc	10000pF+80/-20%	5.0×3.5	2.5	2.5	P1	S1
RDEF11H223Z0□□H01□	F (JIS)	50Vdc	22000pF+80/-20%	4.0×3.5	2.5	5.0	K1	M1
RDEF11H223Z0□□H01□	F (JIS)	50Vdc	22000pF+80/-20%	5.0×3.5	2.5	2.5	P1	S1
RDEF51H223Z0□□H03□	Y5V (EIA)	50Vdc	22000pF+80/-20%	4.0×3.5	2.5	5.0	K1	M1
RDEF51H223Z0□□H03□	Y5V (EIA)	50Vdc	22000pF+80/-20%	5.0×3.5	2.5	2.5	P1	S1
RDEF11H473Z0□□H01□	F (JIS)	50Vdc	47000pF+80/-20%	4.0×3.5	2.5	5.0	K1	M1
RDEF11H473Z0□□H01□	F (JIS)	50Vdc	47000pF+80/-20%	5.0×3.5	2.5	2.5	P1	S1
RDEF51H473Z0□□H03□	Y5V (EIA)	50Vdc	47000pF+80/-20%	4.0×3.5	2.5	5.0	K1	M1
RDEF51H473Z0□□H03□	Y5V (EIA)	50Vdc	47000pF+80/-20%	5.0×3.5	2.5	2.5	P1	S1
RDEF11H104Z0□□H01□	F (JIS)	50Vdc	0.1μF+80/-20%	4.0×3.5	2.5	5.0	K1	M1
RDEF11H104Z0□□H01□	F (JIS)	50Vdc	0.1μF+80/-20%	5.0×3.5	2.5	2.5	P1	S1
RDEF51H104Z0□□H03□	Y5V (EIA)	50Vdc	0.1μF+80/-20%	4.0×3.5	2.5	5.0	K1	M1
RDEF51H104Z0□□H03□	Y5V (EIA)	50Vdc	0.1μF+80/-20%	5.0×3.5	2.5	2.5	P1	S1

Two blank columns are filled with the lead style code. Please refer to the 3 columns on the right for the appropriate code.
The last blank column is filled with the packaging code. (B: bulk, A: ammo pack)

Specifications and Test Methods

No.	Item		Specifications: Temperature Compensating Type	Specifications: High Dielectric Constant Type	Test Method
1	Operating Temperature Range		-55 to +125°C	Char. X7R, X7S: -55 to +125°C Char. F: -25 to +85°C Char. Y5V: -30 to +85°C	–
2	Appearance		No defects or abnormalities		Visual inspection
3	Dimension and Marking		See previous pages		Visual inspection, Vernier Caliper
4	Dielectric Strength	Between Terminals	No defects or abnormalities		The capacitors should not be damaged when test voltages of Table are applied between the terminals for 1 to 5 sec. (Charge/Discharge current ≦ 50mA)

	Rated Voltage	Test Voltage
Temperature Compensating Type	DC50V, DC100V	300% of the rated voltage
	DC250V	200% of the rated voltage
	DC630V	150% of the rated voltage
	DC1kV	130% of the rated voltage
High Dielectric Constant Type	DC25V, DC50V	250% of the rated voltage
	DC100V, DC250V	200% of the rated voltage
	DC630V	150% of the rated voltage
	DC1kV	120% of the rated voltage

No.	Item		Specifications	Test Method
4	Dielectric Strength	Body Insulation	No defects or abnormalities	The capacitor is placed in a container with metal balls of 1mm diameter so that each terminal, short-circuited, is kept approximately 2mm from the balls as shown in the figure, for 1 to 5 sec. between capacitor terminals and metal balls. (Charge/Discharge current ≦ 50mA)

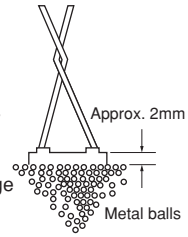

Rated Voltage	Test Voltage
DC25V, DC50V	250% of the rated voltage
DC100V, DC250V	200% of the rated voltage
DC630V, DC1kV	DC1300V

No.	Item		Specifications	Test Method
5	Insulation Resistance	Between Terminals	Rated Voltage: DC25V, DC50V, DC100V 10,000MΩ min. or 500MΩ • μF min. whichever is smaller Rated Voltage: DC250V, DC630V 10,000MΩ min. or 100MΩ • μF min. whichever is smaller	The insulation resistance should be measured with a DC voltage not exceeding the rated voltage (DC500±50V in case of rated vlotage: DC630V, DC1kV) at normal temperature and humidity and within 2 min. of charging. (Charge/Discharge current ≦ 50mA)

No.	Item	Specifications: Temperature Compensating Type	Specifications: High Dielectric Constant Type	Test Method
6	Capacitance	Within the specified tolerance		The capacitance, Q/D.F. should be measured at 25°C at the frequency and voltage shown in the table.
7	Q/Dissipation Factor (D.F.)	30pF min.: Q≧1,000 30pF max.: Q≧400+20C C: Nominal capacitance (pF)	Char. X7R: 0.025 max. Char. F, Y5V: 0.05 max. Char. X7S: 0.125 max.	

Temperature Compensating Type

Item \ Capacitance	C≦1000pF	C>1000pF
Frequency	1±0.1MHz	1±0.1kHz
Voltage	AC0.5 to 5V (r.m.s.)	AC1±0.2V (r.m.s.)

High Dielectric Constant Type

Item \ Capacitance	C≦10μF	C>10μF
Frequency	1±0.1kHz	120±24Hz
Voltage	AC1±0.2V (r.m.s.)	AC0.5±0.1V (r.m.s.)

Continued on the following page.

Specifications and Test Methods

Continued from the preceding page.

No.	Item		Specifications: Temperature Compensating Type	Specifications: High Dielectric Constant Type	Test Method
8	Capacitance Temperature Characteristics	Capacitance Change	Within the specified tolerance (Table A on last column)	Within the specified tolerance (Table B on last column)	The capacitance change should be measured after 5 min. at each specified temperature stage. (1) Temperature Compensating Type The temperature coefficient is determined using the capacitance measured in step 3 as a reference. When cycling the temperature sequentially from step 1 through 5 (-55 to +125°C) the capacitance should be within the specified tolerance for the temperature coefficient and capacitance change as shown in Table A. The capacitance drift is calculated by dividing the differences between the maximum and minimum measured values in step 1, 3 and 5 by the cap. value in step 3. (2) High Dielectric Constant Type The ranges of capacitance change compared with the 25°C (Char. F: 20°C) value over the temperature ranges as shown in Table B should be within the specified ranges. • Pretreatment (for high dielectric constant type) Perform a heat treatment at 150+0/-10°C for 1 hr., and then let sit at room temperature for 24±2 hrs.
		Temperature Coefficient	Within the specified tolerance (Table A on last column)		
		Capacitance Drift	Within ±0.2% or ±0.05pF, whichever is larger		
9	Terminal Strength	Tensile Strength	Termination not to be broken or loosened		As in the figure, fix the capacitor body, apply the force gradually to each lead in the radial direction of the capacitor until reaching 10N and then keep the force applied for 10±1 sec. 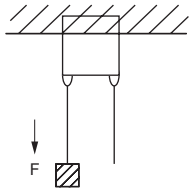
		Bending Strength	Termination not to be broken or loosened		Each lead wire should be subjected to a force of 2.5N and then bent 90° at the point of egress in one direction. Each wire is then returned to the original position and bent 90° in the opposite direction at the rate of one bend per 2 to 3 sec.
10	Vibration Resistance	Appearance	No defects or abnormalities		The capacitor is soldered securely to a supporting terminal and a 10 to 55Hz vibration of 1.5mm peak-peak amplitude is applied for 6 hrs. total, 2 hrs. in each mutually perpendicular direction. Allow 1 min. to cycle the frequency from 10Hz to 55Hz and the converse.
		Capacitance	Within the specified tolerance		
		Q/D.F.	30pF min.: Q≧1,000 30pF max.: Q≧400+20C C: Nominal capacitance (pF)	Char. X7R: 0.025 max. Char. F, Y5V: 0.05 max. Char. X7S: 0.125 max.	
11	Solderability of Leads		Lead wire should be soldered with uniform coating on the axial direction over 3/4 of the circumferential direction.		The terminal of a capacitor is dipped into a 25% ethanol (JIS-K-8101) solution of rosin (JIS-K-5902) and then into molten solder for 2±0.5 sec. In both cases the depth of dipping is up to about 1.5mm to 2mm from the terminal body. Temp. of solder: 245±5°C Lead Free Solder (Sn-3.0Ag-0.5Cu) 235±5°C H60A or H63A Eutectic Solder
12	Resistance to Soldering Heat	Appearance	No defects or abnormalities		The lead wire is immersed in the melted solder 1.5mm to 2mm from the main body at 350±10°C for 3.5±0.5 sec. The specified items are measured after 24±2 hrs. • Pretreatment (for high dielectric constant type) Perform a heat treatment at 150+0/-10°C for 1 hr., and then let sit at room temperature for 24±2 hrs.
		Capacitance Change	Within ±2.5% or ±0.25pF (whichever is larger)	Char. X7R, X7S: Within ±10% Char. F, Y5V: Within ±20%	
		Dielectric Strength (Between Terminals)	No defects		

Continued on the following page.

Specifications and Test Methods

Continued from the preceding page.

No.	Item		Specifications: Temperature Compensating Type	Specifications: High Dielectric Constant Type	Test Method
13	Temperature Cycle	Appearance	No defects or abnormalities		The capacitor should be subjected to 5 temperature cycles. Remove and set for 24±2 hrs. at room temperature, then measure. • Pretreatment (for high dielectric constant type) Perform a heat treatment at 150+0/-10°C for 1 hr., and then let sit at room temperature for 24±2 hrs.
		Capacitance Change	Within ±5% or ±0.5pF (whichever is larger)	Char. X7R, X7S: Within ±12.5% Char. F, Y5V: Within ±30%	
		Q/D.F.	30pF min.: Q≧350 10pF to 30pF: Q≧275+5C/2 10pF max.: Q≧200+10C C: Nominal capacitance (pF)	Char. X7R: 0.05 max. Char. F, Y5V: 0.075 max. Char. X7S: 0.2 max.	
		Insulation Resistance	Rated Voltage: DC25V, DC50V, DC100V 1,000MΩ, 50MΩ • μF min. (whichever is smaller) Rated Voltage: DC250V, DC630V 1,000MΩ, 10MΩ • μF min. (whichever is smaller)		
		Dielectric Strength (Between Terminals)	No defects or abnormalities		
14	Humidity (Steady State)	Appearance	No defects or abnormalities		Set the capacitor at 40±2°C and relative humidity of 90 to 95% for 500^{+24}_{0} hrs. Remove and set for 24±2 hrs. at room temperature, then measure. • Pretreatment (for high dielectric constant type) Perform a heat treatment at 150+0/-10°C for 1 hr., and then let sit at room temperature for 24±2 hrs.
		Capacitance Change	Within ±5% or ±0.5pF (whichever is larger)	Char. X7R, X7S: Within ±15% Char. F, Y5V: Within ±30%	
		Q/D.F.	30pF min.: Q≧350 10pF to 30pF: Q≧275+5C/2 10pF max.: Q≧200+10C C: Nominal capacitance (pF)	Char. X7R: 0.05 max. Char. F, Y5V: 0.075 max. Char. X7S: 0.2 max.	
		Insulation Resistance	Rated Voltage: DC25V, DC50V, DC100V 1,000MΩ, 50MΩ • μF min. (whichever is smaller) Rated Voltage: DC250V, DC630V 1,000MΩ, 10MΩ • μF min. (whichever is smaller)		
15	Humidity Load	Appearance	No defects or abnormalities		Apply the rated voltage for 500^{+24}_{0} hrs. at 40±2°C and in 90 to 95% humidity. Remove and set for 24±2 hrs. at room temperature, then measure. (Charge/Discharge current ≦50mA) • Pretreatment (for high dielectric constant type) Perform a heat treatment at 150+0/-10°C for 1 hr., and then let sit at room temperature for 24±2 hrs.
		Capacitance Change	Within ±7.5% or ±0.75pF (whichever is larger)	Char. X7R, X7S: Within ±15% Char. F, Y5V: Within ±30%	
		Q/D.F.	30pF min.: Q≧200 30pF max.: Q≧100+10C/3 C: Nominal capacitance (pF)	Char. X7R: 0.05 max. Char. F, Y5V: 0.075 max. Char. X7S: 0.2 max.	
		Insulation Resistance	Rated Voltage: DC25V, DC50V, DC100V 500MΩ or 25MΩ • μF min. (whichever is smaller) Rated Voltage: DC250V, DC630V 1,000MΩ or 10MΩ • μF min. (whichever is smaller)		
16	High Temperature Load	Appearance	No defects or abnormalities		Apply voltage in Table for 1000^{+48}_{0} hrs. at the maximum operating temperature±3°C. Remove and set for 24±2 hrs. at room temperature, then measure. (Charge/Discharge current ≦50mA) • Pretreatment (for high dielectric constant type) Appy test voltage for 1 hr., at test temperature. Remove and set for 24±2 hrs. at room temperature.
		Capacitance Change	Within ±3% or ±0.3pF (whichever is larger)	Char. X7R, X7S: Within ±15% (Rated Voltage: DC630V or less) Within ±20% (Rated Voltage: DC1kV) Char. F, Y5V: Within ±30%	
		Q/D.F.	30pF min.: Q≧350 10pF to 30pF: Q≧275+5C/2 10pF max.: Q≧200+10C C: Nominal capacitance (pF)	Char. X7R: 0.05 max. Char. F, Y5V: 0.075 max. Char. X7S: 0.2 max.	
		Insulation Resistance	Rated Voltage: DC25V, DC50V, DC100V 1,000MΩ, 50MΩ • μF min. (whichever is smaller) Rated Voltage: DC250V, DC630V 1,000MΩ, 10MΩ • μF min. (whichever is smaller)		
17	Solvent Resistance	Appearance	No defects or abnormalities		The capacitor should be fully immersed, unagitated, in reagent at 20 to 25°C for 30±5 sec. and then removed gently. Marking on the surface of the capacitor should immediately be visually examined. Reagent: • Isopropyl alcohol
		Marking	Legible		

Rated Voltage	Test Voltage
Temperature Compensating Type: DC50V, DC100V, DC250V	150% of the rated voltage
Temperature Compensating Type: DC630V, DC1kV	120% of the rated voltage
High Dielectric Constant Type: DC25V, DC50V, DC100V, DC250V	150% of the rated voltage
High Dielectric Constant Type: DC630V	120% of the rated voltage
High Dielectric Constant Type: DC1kV	110% of the rated voltage

Table A

Char.	Nominal Values (ppm/°C) *1	Capacitance Change from 25°C (%)					
		–55°C		–30°C		–10°C	
		Max.	Min.	Max.	Min.	Max.	Min.
C0G	0±30	0.58	–0.24	0.40	–0.17	0.25	–0.11
U2J	-750±120	8.78	5.04	6.04	3.47	3.84	2.21

*1: Nominal values denote the temperature coefficient within a range of 25 to 125°C

Table B

Char.	Temp. Range	Reference Temp.	Cap. Change Rate
X7R	–55 to +125°C	25°C	Within ±15%
X7S			Within ±22%
Y5V	–30 to + 85°C		Within $^{+22}_{-82}$%
F	–25 to + 85°C	20°C	Within $^{+30}_{-80}$%

Radial Lead Type Monolithic Ceramic Capacitors

muRata

RDE Series Large Capacitance and High Allowable Ripple Current (For General Use Only) (DC250V-DC630V)

■ Features

1. Higher capacitance with DC-Bias; approximately 40% higher than X7R under loaded rated voltage.
2. Meet LF (Lead Free) and HF (Halogen Free)
3. Allowable higher ripple current
4. Reduces acoustic noise
   Approximately 15dB reduction in comparison to leaded X7R characteristics parts.
   Approximately 30dB reduction in comparison to SMD X7R characteristics part because the contact area is smaller than a SMD.

Dimensions code: 2/3/4
Lead style code: K1

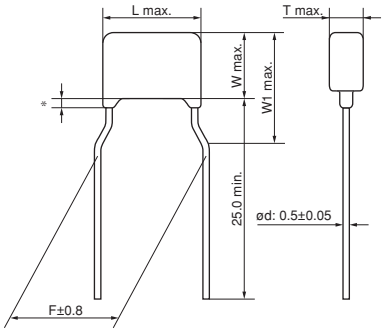

* Coating extension does not exceed the end of the lead bend.
· Lead Wire: Solder Coated CP Wire

(in mm)

■ Applications

1. DC smoothing capacitor for LED bulb
2. PFC capacitor for general use SMPS
3. Replace Al-E capacitor for long-life equipment

■ Dimensions

Dimensions and Lead Style Code	DC Rated Voltage	Dimensions (mm)					
		L	W	W1	T	F	d
2K1/2M1	250V/450V/630V	5.5	4.0	6.0	See the individual product specification	5.0	0.5
3K1/3M1	250V/450V/630V	5.5	5.0	7.5		5.0	0.5
4K1/4M1	250V/450V/630V	7.5	5.5	8.0		5.0	0.5
5B1/5E1	250V/450V/630V	7.5	7.5*	-		5.0	0.5
UB1/UE1	250V/450V/630V	7.7	12.5*	-		5.0	0.5

*DC630V: W+0.5mm

Dimensions code: 5
Lead style code: B1

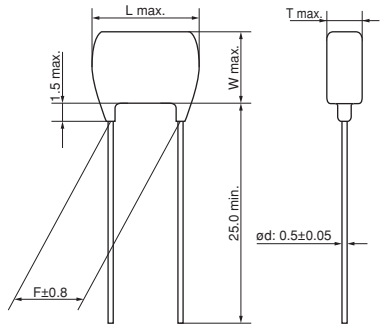

· Lead Wire: Solder Coated CP Wire

(in mm)

Dimensions code: U
Lead style code: B1

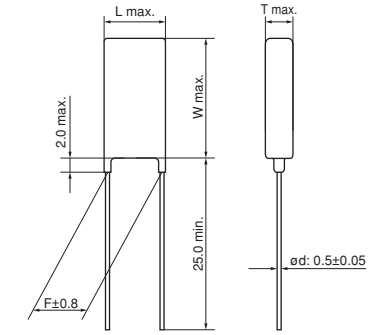

· Lead Wire: Solder Coated CP Wire

(in mm)

■ Marking

Dimensions Code \ Rated Voltage	DC250V	DC450V	DC630V
Temp. Char.	X7T		
2	Ⓜ 683 K47	Ⓜ 153 K97	Ⓜ 153 K77
3, 8	Ⓜ 334 K47	Ⓜ 104 K97	Ⓜ 223 K77
5, U	Ⓜ 225 M47	Ⓜ 474 K97	Ⓜ 474 M77
Temperature Characteristics	Marked with code (X7T char.: 7)		
Nominal Capacitance	Marked with 3 figures		
Capacitance Tolerance	Marked with code		
Rated Voltage	Marked with code (DC250V: 4, DC450V: 9, DC630V: 7)		
Manufacturer's Identification	Marked with Ⓜ		

4

High Dielectric Constant Type, X7T Characteristics

Part Number	Temp. Char.	Rated Voltage	Capacitance	Dimensions LxW (mm)	Dimension T (mm)	Lead Space F (mm)	Lead Style Code Bulk	Lead Style Code Taping
RDED72E333K2□□H03□	X7T (EIA)	250Vdc	33000pF±10%	5.5×4.0	3.15	5.0	K1	M1
RDED72E473K2□□H03□	X7T (EIA)	250Vdc	47000pF±10%	5.5×4.0	3.15	5.0	K1	M1
RDED72E683K2□□H03□	X7T (EIA)	250Vdc	68000pF±10%	5.5×4.0	3.15	5.0	K1	M1
RDED72E104K3□□H03□	X7T (EIA)	250Vdc	0.10μF±10%	5.5×5.0	4.0	5.0	K1	M1
RDED72E154K3□□H03□	X7T (EIA)	250Vdc	0.15μF±10%	5.5×5.0	4.0	5.0	K1	M1
RDED72E224K4□□H03□	X7T (EIA)	250Vdc	0.22μF±10%	7.5×5.5	4.0	5.0	K1	M1
RDED72E334K4□□H03□	X7T (EIA)	250Vdc	0.33μF±10%	7.5×5.5	4.0	5.0	K1	M1
RDED72E474K5□□H03□	X7T (EIA)	250Vdc	0.47μF±10%	7.5×7.5	4.5	5.0	B1	E1
RDED72E684K5□□H03□	X7T (EIA)	250Vdc	0.68μF±10%	7.5×7.5	4.5	5.0	B1	E1
RDED72E105K5□□H03□	X7T (EIA)	250Vdc	1.0μF±10%	7.5×7.5	4.5	5.0	B1	E1
RDED72E225MU□□H03□	X7T (EIA)	250Vdc	2.2μF±20%	7.7×12.5	4.5	5.0	B1	E1
RDED72W103K2□□H03□	X7T (EIA)	450Vdc	10000pF±10%	5.5×4.0	3.15	5.0	K1	M1
RDED72W153K2□□H03□	X7T (EIA)	450Vdc	15000pF±10%	5.5×4.0	3.15	5.0	K1	M1
RDED72W223K2□□H03□	X7T (EIA)	450Vdc	22000pF±10%	5.5×4.0	3.15	5.0	K1	M1
RDED72W333K2□□H03□	X7T (EIA)	450Vdc	33000pF±10%	5.5×4.0	3.15	5.0	K1	M1
RDED72W473K2□□H03□	X7T (EIA)	450Vdc	47000pF±10%	5.5×4.0	3.15	5.0	K1	M1
RDED72W683K3□□H03□	X7T (EIA)	450Vdc	68000pF±10%	5.5×5.0	4.0	5.0	K1	M1
RDED72W104K3□□H03□	X7T (EIA)	450Vdc	0.10μF±10%	5.5×5.0	4.0	5.0	K1	M1
RDED72W154K4□□H03□	X7T (EIA)	450Vdc	0.15μF±10%	7.5×5.5	4.0	5.0	K1	M1
RDED72W224K5□□H03□	X7T (EIA)	450Vdc	0.22μF±10%	7.5×7.5	4.5	5.0	B1	E1
RDED72W334K5□□H03□	X7T (EIA)	450Vdc	0.33μF±10%	7.5×7.5	4.5	5.0	B1	E1
RDED72W474K5□□H03□	X7T (EIA)	450Vdc	0.47μF±10%	7.5×7.5	4.5	5.0	B1	E1
RDED72W564K5□□H03□	X7T (EIA)	450Vdc	0.56μF±10%	7.5×7.5	4.5	5.0	B1	E1
RDED72W105MU□□H03□	X7T (EIA)	450Vdc	1.0μF±20%	7.7×12.5	4.5	5.0	B1	E1
RDED72W125MU□□H03□	X7T (EIA)	450Vdc	1.2μF±20%	7.7×12.5	4.5	5.0	B1	E1
RDED72J103K2□□H03□	X7T (EIA)	630Vdc	10000pF±10%	5.5×4.0	3.15	5.0	K1	M1
RDED72J153K2□□H03□	X7T (EIA)	630Vdc	15000pF±10%	5.5×4.0	3.15	5.0	K1	M1
RDED72J223K3□□H03□	X7T (EIA)	630Vdc	22000pF±10%	5.5×5.0	4.0	5.0	K1	M1
RDED72J333K3□□H03□	X7T (EIA)	630Vdc	33000pF±10%	5.5×5.0	4.0	5.0	K1	M1
RDED72J473K3□□H03□	X7T (EIA)	630Vdc	47000pF±10%	5.5×5.0	4.0	5.0	K1	M1
RDED72J683K4□□H03□	X7T (EIA)	630Vdc	68000pF±10%	7.5×5.5	4.0	5.0	K1	M1
RDED72J104K5□□H03□	X7T (EIA)	630Vdc	0.10μF±10%	7.5×8.0	4.5	5.0	B1	E1
RDED72J154K5□□H03□	X7T (EIA)	630Vdc	0.15μF±10%	7.5×8.0	4.5	5.0	B1	E1

Continued on the following page.

Continued from the preceding page.

Part Number	Temp. Char.	Rated Voltage	Capacitance	Dimensions LxW (mm)	Dimension T (mm)	Lead Space F (mm)	Lead Style Code Bulk	Lead Style Code Taping
RDED72J224K5□□H03□	X7T (EIA)	630Vdc	0.22μF±10%	7.5×8.0	4.5	5.0	B1	E1
RDED72J274K5□□H03□	X7T (EIA)	630Vdc	0.27μF±10%	7.5×8.0	4.5	5.0	B1	E1
RDED72J474MU□□H03□	X7T (EIA)	630Vdc	0.47μF±20%	7.7×13.0	4.5	5.0	B1	E1
RDED72J564MU□□H03□	X7T (EIA)	630Vdc	0.56μF±20%	7.7×13.0	4.5	5.0	B1	E1

Two blank columns are filled with the lead style code. Please refer to the 3 columns on the right for the appropriate code.
The last blank column is filled with the packaging code. (B: bulk, A: ammo pack)

Specifications and Test Methods

No.	Item		Specifications	Test Method
1	Operating Temperature Range		-55 to +125°C	–
2	Appearance		No defects or abnormalities	Visual inspection
3	Dimension and Marking		See previous pages	Visual inspection, Vernier Caliper
4	Dielectric Strength	Between Terminals	No defects or abnormalities	The capacitor should not be damaged when voltage in Table is applied between the terminations for 1 to 5 sec. (Charge/Discharge current ≦ 50mA) Rated Voltage / Test Voltage DC250V: 200% of the rated voltage DC450V: 150% of the rated voltage DC630V: 120% of the rated voltage
		Body Insulation	No defects or abnormalities	The capacitor is placed in a container with metal balls of 1mm diameter so that each terminal, short-circuit, is kept approximately 2mm from the balls as shown in the figure, and 200% of the rated DC voltage is impressed for 1 to 5 sec. between capacitor terminals and metal balls. (Charge/Discharge current ≦ 50mA) 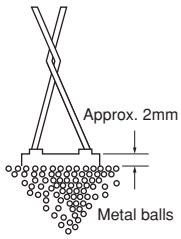
5	Insulation Resistance	Between Terminals	More than 10,000MΩ or 100MΩ · μF, Whichever is smaller	The insulation resistance should be measured with DC500±50V (DC250±25V in case of rated voltage: DC250V,DC450V) at normal temperature and humidity and within 2 min. of charging. (Charge/Discharge current ≦ 50mA)
6	Capacitance		Within the specified tolerance	The capacitance/D.F. should be measured at the frequency of 1±0.1kHz and a voltage of AC1±0.2V(r.m.s.).
7	Dissipation Factor (D.F.)		0.01 max.	
8	Capacitance Temperature Characteristics		Within +22/-33%	The capacitance change should be measured after 5 min. at each specified temperature stage. Step / Temperature (°C) 1: 25±2 2: -55±3 3: 25±2 4: 125±3 5: 25±2
9	Terminal Strength	Tensile Strength	Termination not to be broken or loosened	As in the figure, fix the capacitor body, apply the force gradually to each lead in the radial direction of the capacitor until reaching 10N and then keep the force applied for 10±1 sec. 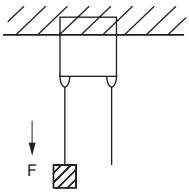
		Bending Strength	Termination not to be broken or loosened	Each lead wire should be subjected to a force of 2.5N and then bent 90° at the point of egress in one direction. Each wire is then returned to the original position and bent 90° in the opposite direction at the rate of one bend per 2 to 3 sec.
10	Vibration Resistance	Appearance	No defects or abnormalities	The capacitor should be firmly soldered to the supporting lead wire and vibrated at a frequency range of 10 to 55Hz, 1.5mm in total amplitude, with about a 1 minute rate of vibration change from 10Hz to 55Hz and back to 10Hz. Apply for a total of 6 hrs., 2 hrs. each in 3 mutually perpendicular directions.
		Capacitance	Within the specified tolerance	
		D.F.	0.01 max.	

Continued on the following page.

Specifications and Test Methods

Continued from the preceding page.

No.	Item		Specifications	Test Method
11	Solderability of Leads		Lead wire should be soldered with uniform coating on the axial direction over 3/4 of the circumferential direction.	The terminal of a capacitor is dipped into a solution of ethanol (JIS-K-8101) and rosin (JIS-K-5902) (25% rosin in weight proportion) and then into molten solder (JIS-Z-3282) for 2±0.5 sec. In both cases the depth of dipping is up to about 1.5 to 2mm from the terminal body. Temp. of solder: 245±5°C Lead Free Solder (Sn-3.0Ag-0.5Cu) 235±5°C H60A or H63A Eutectic Solder
12	Resistance to Soldering Heat	Appearance	No defects or abnormalities	The lead wire is immersed in the melted solder 1.5 to 2mm from the main body at 350±10°C for 3.5±0.5 sec. The specified items are measured after 24±2 hrs. • Pretreatment Perform a heat treatment at 150+0/-10°C for 1 hr., and then let sit at room temperature for 24±2 hrs.
		Capacitance Change	Within ±10%	
		Dielectric Strength (Between Terminals)	No defects	
13	Temperature Cycle	Appearance	No defects or abnormalities	The capacitor should be subjected to 5 temperature cycles. Step / Temperature (°C) / Time (min) 1 / -55±3 / 30±3 2 / Room Temp. / 3 max. 3 / 125±3 / 30±3 4 / Room Temp. / 3 max. • Pretreatment Perform a heat treatment at 150+0/-10°C for 1 hr., and then let sit at room temperature for 24±2 hrs.
		Capacitance Change	Within ±7.5%	
		D.F.	0.01 max.	
		Insulation Resistance	More than 10,000MΩ or 100MΩ · μF (Whichever is smaller)	
		Dielectric Strength (Between Terminals)	No defects or abnormalities	
14	Humidity (Steady State)	Appearance	No defects or abnormalities	Set the capacitor at 40±2°C and relative humidity of 90 to 95% for 500 $^{+24}_{0}$ hrs. Remove and set for 24±2 hrs. at room temperature, then measure. • Pretreatment Perform a heat treatment at 150+0/-10°C for 1 hr., and then let sit at room temperature for 24±2 hrs.
		Capacitance Change	Within ±12.5%	
		D.F.	0.02 max.	
		Insulation Resistance	More than 1,000MΩ or 10MΩ · μF (Whichever is smaller)	
15	Humidity Load	Appearance	No defects or abnormalities	Apply the rated voltage at 40±2°C and relative humidity of 90 to 95% for 500 $^{+24}_{0}$ hrs. Remove and set for 24±2 hrs. at room temperature, then measure. (Charge/Discharge current ≦ 50mA) • Pretreatment Perform a heat treatment at 150+0/-10°C for 1 hr., and then let sit at room temperature for 24±2 hrs.
		Capacitance Change	Within ±12.5%	
		D.F.	0.02 max.	
		Insulation Resistance	More than 1,000MΩ or 10MΩ · μF (Whichever is smaller)	
16	High Temperature Load	Appearance	No defects or abnormalities	Apply voltage in Table for 1000 $^{+48}_{0}$ hrs. at the maximum operating temperature. Remove and set for 24±2 hrs. at room temperature, then measure. (Charge/Discharge current ≦ 50mA) Rated Voltage / Test Voltage DC250V / 150% of the rated voltage DC450V / 130% of the rated voltage DC630V / 120% of the rated voltage • Pretreatment Apply test voltage for 1 hr., at test temperature. Remove and set for 24±2 hrs. at room temperature.
		Capacitance Change	Within ±12.5%	
		D.F.	0.02 max.	
		Insulation Resistance	More than 1,000MΩ or 10MΩ · μF (Whichever is smaller)	
17	Solvent Resistance	Appearance	No defects or abnormalities	The capacitor should be fully immersed, unagitated, in reagent at 20 to 25°C for 30±5 sec. and then removed gently. Marking on the surface of the capacitor should immediately be visually examined. Reagent : • Isopropyl alcohol
		Marking	Legible	

RCE Series Characteristics Reference Data (Typical Example)

■ Capacitance - Temperature Characteristics

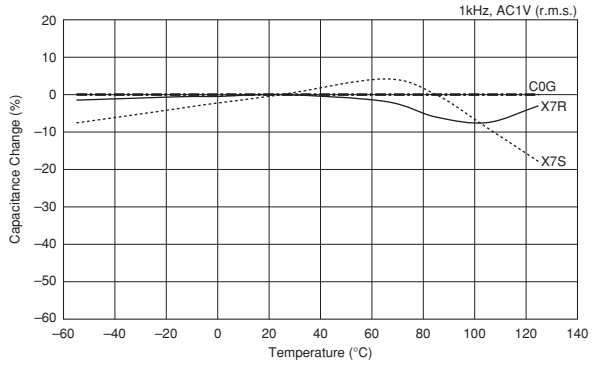

■ Capacitance - DC Voltage Characteristics

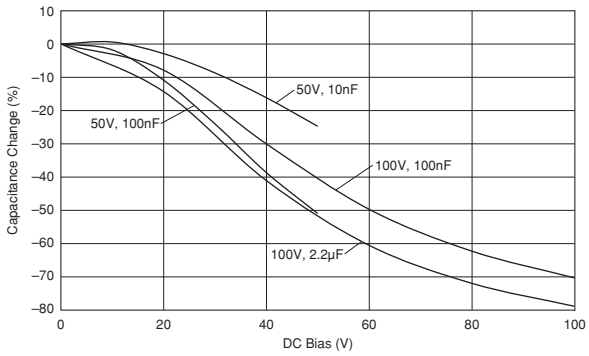

■ Capacitance Change - Aging

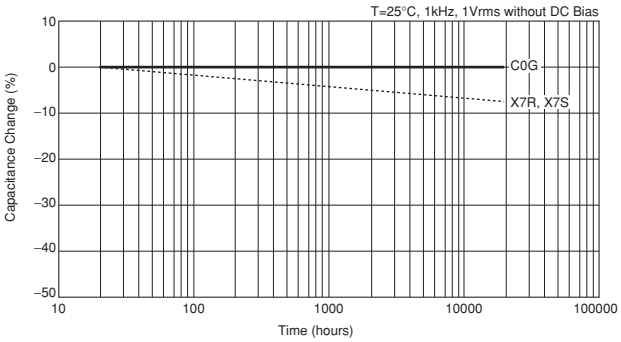

■ Impedance - Frequency Characteristics

Temperature Compensating Type

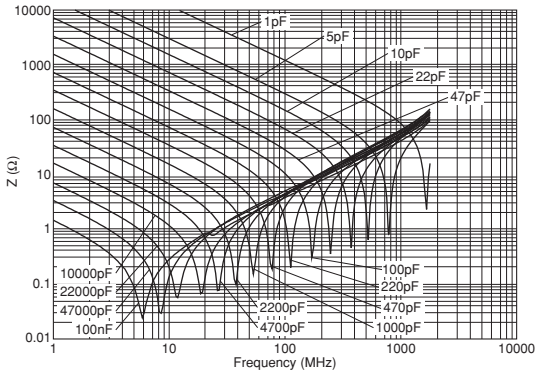

High Dielectric Constant Type

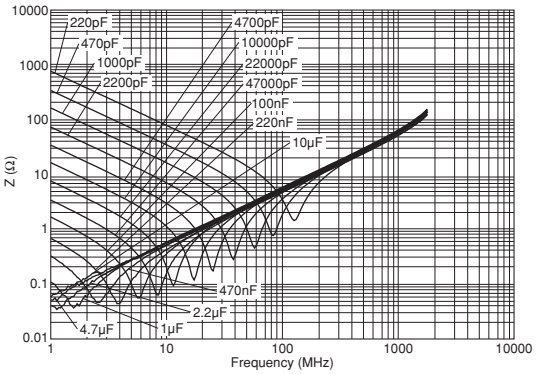

RHE Series Characteristics Reference Data (Typical Example)

■ Capacitance - Temperature Characteristics

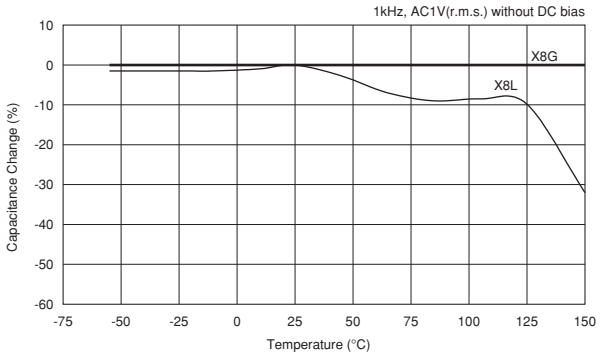

■ Capacitance - DC Voltage Characteristics

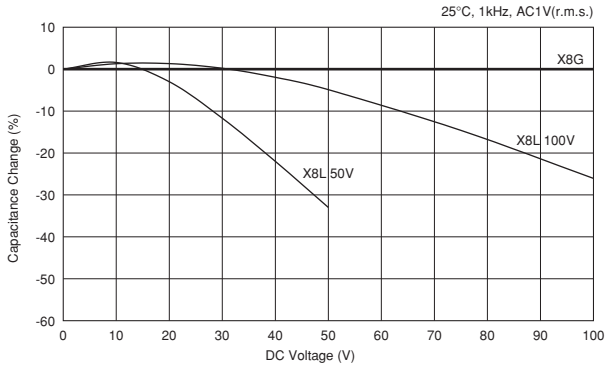

■ Capacitance Change - Aging

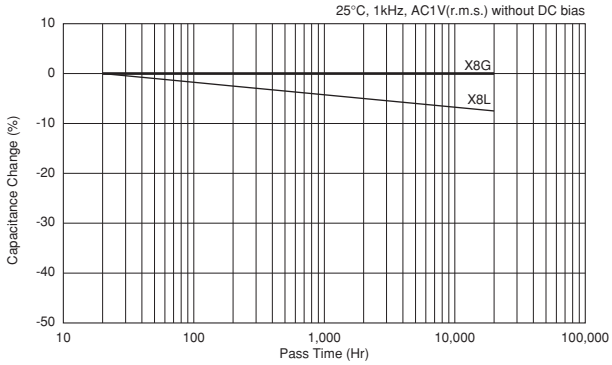

■ Impedance - Frequency Characteristics

Temperature Compensating Type

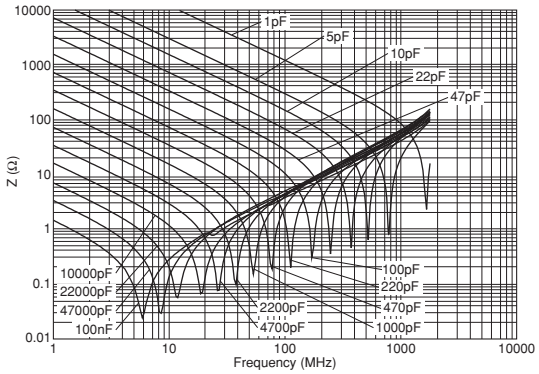

High Dielectric Constant Type

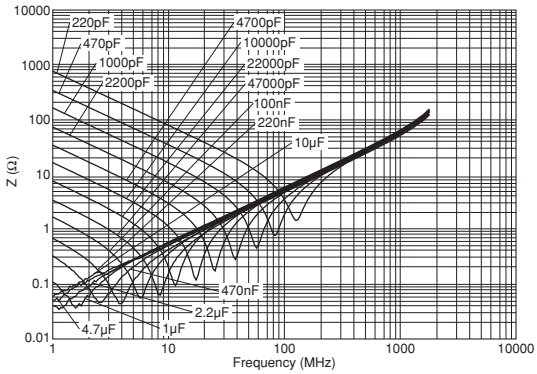

RDE Series Characteristics Reference Data (Typical Example)

■ Capacitance - Temperature Characteristics

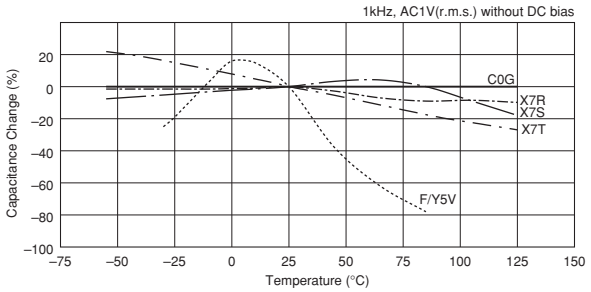

■ Capacitance - DC Voltage Characteristics

Rated Voltage: DC25V to DC100V

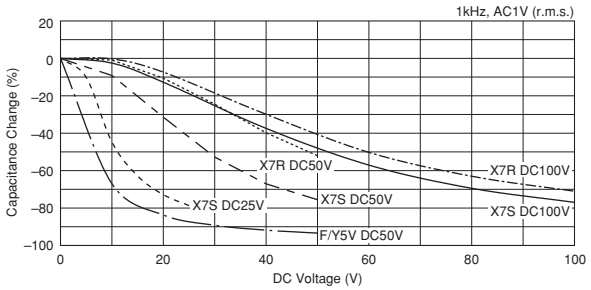

Rated Voltage: DC250V to DC1kV

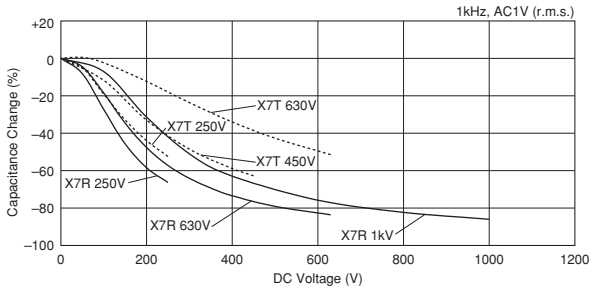

■ Capacitance Change - Aging

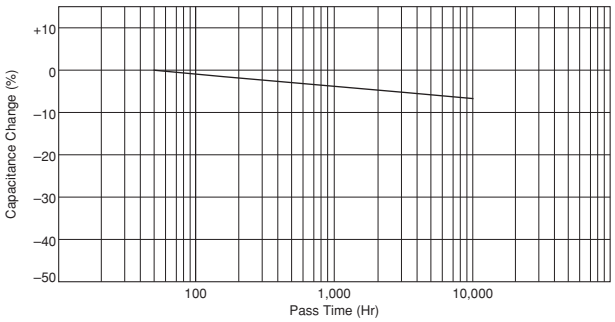

■ Impedance - Frequency Characteristics

Temperature Compensating Type

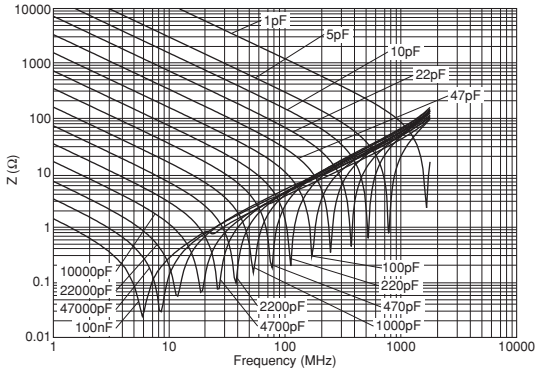

High Dielectric Constant Type

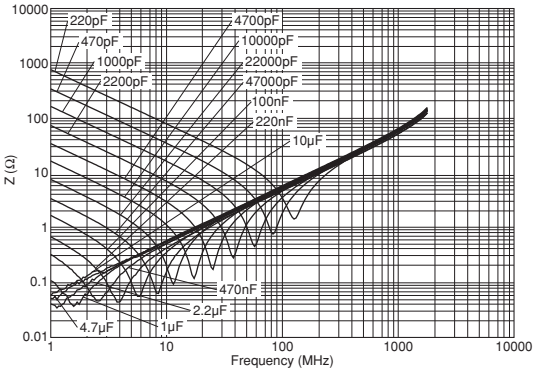

Packaging

■ Packaging

Two types of packaging for monolithic ceramic capacitors are available.

1. Bulk Packaging

Minimum Quantity

Dimensions Code	Dimensions (L×W)	Minimum Quantity (pcs./Bag)
0	3.6×3.5mm or 4.0×3.5mm or 5.0×3.5mm (Depends on Part Number List)	500
1	4.0×3.5mm or 4.5×3.5mm or 5.0×3.5mm (Depends on Part Number List)	
2	5.5×4.0mm	
3	5.5×5.0mm	
4	7.5×5.5mm	
5	7.5×7.5mm (DC630V: 7.5×8.0mm)	
W	5.5×7.5mm or 6.0×8.0mm (Depends on Part Number List)	
U	7.7×12.5mm (DC630V: 7.7×13.0mm)	200

Please order with an integral multiple of the minimum quantity above.

2. Tape Carrier Packaging

(1) Dimensions of Ammo Pack

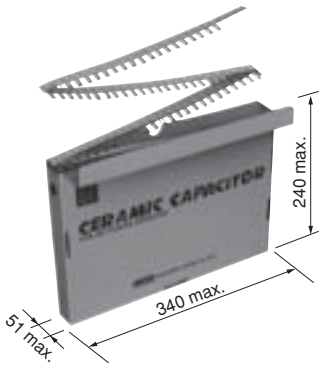

(in mm)

(2) Minimum Quantity

Dimensions Code	Dimensions (L×W)	Minimum Quantity (pcs./Ammo Pack)
0	4.0×3.5mm or 5.0×3.5mm (Depends on Part Number List)	2000*1
1	4.0×3.5mm or 4.5×3.5mm or 5.0×3.5mm (Depends on Part Number List)	
2	5.5×4.0mm	
3	5.5×5.0mm	
5	7.5×7.5mm (DC630V: 7.5×8.0mm)	2000*2
6	10.0×10.0mm	1500
8	7.5×5.5mm	
W	5.5×7.5mm or 6.0×8.0mm (Depends on Part Number List)	
U	7.7×12.5mm (DC630V: 7.7×13.0mm)	1000*3

Please order with an integral multiple of the minimum quantity above.

*1 1500 pcs. for **RDER71H335K3□□C03A, RDEC71E226K3□□C03A, RDEC72A155K3□□C03A, RDEC72A225K3□□C03A**
(Two blank columns are filled with the lead style code.)

*2 1500 pcs. for **RDE** Series

*3 1500 pcs. for **RDED72W105MUE1H03A, RDER72E105MUE1H03A, RDER72J474MUE1K03A**

"Minimum Quantity" means the numbers of units of each delivery or order. The quantity should be an integral multiple of the "minimum quantity." (Please note that the actual delivery quantity in a package may change sometimes.)

Continued on the following page.

Packaging

Continued from the preceding page.

Taping Dimensions

Inside Crimp Taping

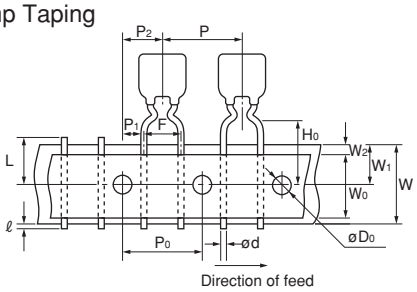

Dimensions and Lead style code	Dimensions (L×W)
0M1	3.6×3.5mm or 4.0×3.5mm
1M1	4.0×3.5mm or 4.5×3.5mm (Depends on Part Number List)
2M1	5.5×4.0mm
2M2	
3M1	5.5×5.0mm
3M2	
4M1	7.5×5.5mm
4M2	
WM1	5.5×7.5mm

Straight Taping

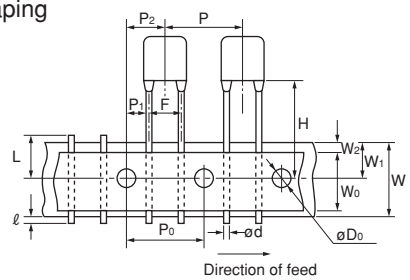

Dimensions and Lead style code	Dimensions (L×W)
0DB	3.6×3.5mm
1DB	4.0×3.5mm
2DB	5.5×4.0mm
3DB	5.5×5.0mm
5E1	7.5×7.5mm (DC630V, DC1kV: 7.5×8.0mm)
5E2	
UE1	7.7×12.5mm (DC630V, DC1kV: 7.7×13.0mm)

Outside Crimp Taping

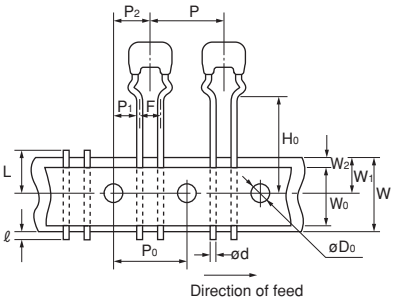

Dimensions and Lead style code	Dimensions (L×W)
0S1	5.0×3.5mm
1S1	
2S1	5.5×4.0mm
2S2	
3S1	5.5×5.0mm
3S2	

Item	Code	Dimensions (mm)
Pitch of Component	P	12.7±1.0
Pitch of Sprocket Hole	P_0	12.7±0.2
Lead Spacing	F	$2.5^{+0.4}_{-0.2}$ (DB) (S1) (S2)
		$5.0^{+0.6}_{-0.2}$
Length from Hole Center to Component Center	P_2	6.35±1.3
Length from Hole Center to Lead	P_1	3.85±0.7
		5.1±0.7 (DB) (S1) (S2)
		254±1.5 Total length of components pitch X 20
Body Dimension		Depends on Part Number List
Deviation Along Tape, Left or Right Defect	ΔS	±2.0
Carrier Tape Width	W	18.0±0.5
Position of Sprocket Hole	W_1	$9.0^{+0}_{-0.5}$
Lead Distance between Reference and Bottom Plane	H_0	16.0±0.5 (M1) (S1)
		20.0±0.5 (M2) (S2)
For Straight Lead Type	H	20±0.5 (E2), 17.5±0.5 (E1), 16±0.5 (DB)
Diameter of Sprocket Hole	D_0	4.0±0.1
Lead Diameter	d	0.5±0.05
Total Tape Thickness	t_1	0.6±0.3
Total Thickness of Tape and Lead Wire	t_2	1.5 max.
Body Thickness	T	Depends on Part Number List
Deviation Across Tape	Δh1 Δh2	1.0 max. (Dimensions code W, U: 2.0 max.)
Portion to Cut in Case of Defect	L	$11.0^{+0}_{-1.0}$
Protrusion Length	ℓ	0.5 max.
Hold Down Tape Width	W_0	9.5 min.
Hold Down Tape Position	W_2	1.5±1.5
Coating Extension		Depends on Dimensions

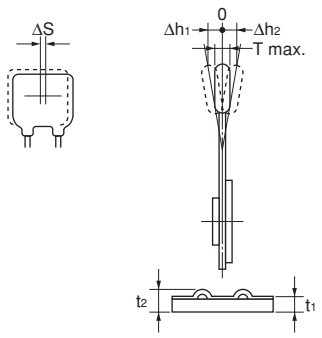

⚠Caution

■ ⚠Caution (Storage and Operating Condition)

Operating and storage environment

The insulating coating of capacitors does not form a perfect seal; therefore, do not use or store capacitors in a corrosive atmosphere, especially where chloride gas, sulfide gas, acid, alkali, salt or the like are present. Also avoid exposure to moisture. Before cleaning, bonding or molding this product, verify that these processes do not affect product quality by testing the performance of a cleaned, bonded or molded product in the intended equipment. Store the capacitors where the temperature and relative humidity do not exceed 5 to 40 degrees centigrade and 20 to 70%.
Use capacitors within 6 months after delivery.

FAILURE TO FOLLOW THE ABOVE CAUTIONS MAY RESULT, WORST CASE, IN A SHORT CIRCUIT AND CAUSE FUMING OR PARTIAL DISPERSION WHEN THE PRODUCT IS USED.

■ ⚠Caution (Rating)

1. Operating Voltage

When DC-rated capacitors are to be used in AC or ripple current circuits, be sure to maintain the Vp-p value of the applied voltage or the V0-p which contains DC bias within the rated voltage range.
When the voltage is applied to the circuit, starting or stopping may generate irregular voltage for a transit period because of resonance or switching. Be sure to use a capacitor with a rated voltage range that includes these irregular voltages.

When DC-rated capacitors are to be used in input circuits from commercial power source (AC filter), be sure to use Safety Recognized Capacitors because various regulations on withstand voltage or impulse withstand established for all equipment should be taken into consideration.

Voltage	DC Voltage	DC+AC Voltage	AC Voltage	Pulse Voltage (1)	Pulse Voltage (2)
Positional Measurement	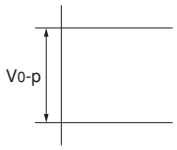	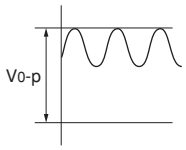	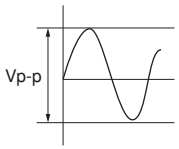	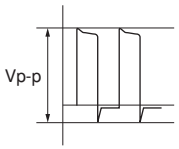	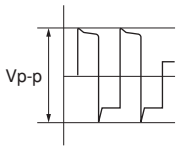

2. Operating Temperature and Self-generated Heat

Keep the surface temperature of a capacitor below the upper limit of its rated operating temperature range. Be sure to take into account the heat generated by the capacitor itself. When the capacitor is used in a high-frequency current, pulse current or similar current, it may have self-generated heat due to dielectric loss. In the case of "High Dielectric Constant Type Capacitors," applied voltage load should be such that self-generated heat is within 20 °C under the condition where the capacitor is subjected at an atmosphere temperature of 25 °C. Please contact us if self-generated heat occurs with "Temperature Compensating Type Capacitors".
When measuring, use a thermocouple of small thermal capacity -K of ø0.1mm under conditions where the capacitor is not affected by radiant heat from other components or wind from surroundings. Excessive heat may lead to deterioration of the capacitor's characteristics and reliability. Never attempt to perform measurement with the cooling fan running. Otherwise, accurate measurement cannot be ensured.

3. Fail-Safe

Be sure to provide an appropriate fail-safe function on your product to prevent a second damage that may be caused by the abnormal function or the failure of our product.

FAILURE TO FOLLOW THE ABOVE CAUTIONS MAY RESULT, WORST CASE, IN A SHORT CIRCUIT AND CAUSE FUMING OR PARTIAL DISPERSION WHEN THE PRODUCT IS USED.

■ ⚠Caution (Soldering and Mounting)

1. Vibration and impact
   Do not expose a capacitor or its leads to excessive shock or vibration during use.
2. Soldering
   When soldering this product to a PCB/PWB, do not exceed the solder heat resistance specification of the capacitor. Subjecting this product to excessive heating could melt the internal junction solder and may result in thermal shocks that can crack the ceramic element.
3. Bonding, resin molding and coating
   In case of bonding, molding or coating this product, verify that these processes do not affect the quality of the capacitor by testing the performance of the bonded, molded or coated product in the intended equipment.
   In case the amount of application, dryness/hardening conditions of adhesives and molding resins containing organic solvents (ethyl acetate, methyl ethyl ketone, toluene, etc.) are unsuitable, the outer coating resin of a capacitor may be damaged by the organic solvents and may result, worst case, in a short circuit.
   The variation in thickness of adhesive or molding resin or coating may cause an outer coating resin cracking and/or ceramic element cracking of a capacitor in a temperature cycling.
4. Treatment after bonding, resin molding and coating
   When the outer coating is hot (over 100 degrees centigrade) after soldering, it becomes soft and fragile, so please be careful not to give it mechanical stress.

FAILURE TO FOLLOW THE ABOVE CAUTIONS MAY RESULT, WORST CASE, IN A SHORT CIRCUIT AND CAUSE FUMING OR PARTIAL DISPERSION WHEN THE PRODUCT IS USED.

■ ⚠Caution (Handling)

Vibration and impact
Do not expose a capacitor or its leads to excessive shock or vibration during use.

FAILURE TO FOLLOW THE ABOVE CAUTIONS MAY RESULT, WORST CASE, IN A SHORT CIRCUIT AND CAUSE FUMING OR PARTIAL DISPERSION WHEN THE PRODUCT IS USED.

Notice

■ Notice (Rating)

Capacitance change of capacitor

In case of F/X7R/X7S/X7T/X8L/Y5V char.

Capacitors have an aging characteristic, whereby the capacitor continually decreases its capacitance slightly if the capacitor is left on for a long time. Moreover, capacitance might change greatly depending on the surrounding temperature or an applied voltage.

■ Notice (Soldering and Mounting)

1. Cleaning (ultrasonic cleaning)

To perform ultrasonic cleaning, observe the following conditions.

Rinse bath capacity: Output of 20 watts per liter or less.

Rinsing time: 5 min. maximum.

Do not vibrate the PCB/PWB directly.

Excessive ultrasonic cleaning may lead to fatigue destruction of the lead wires.

2. Soldering and Mounting

(1) Allowable Conditions for Soldering Temperature and Time

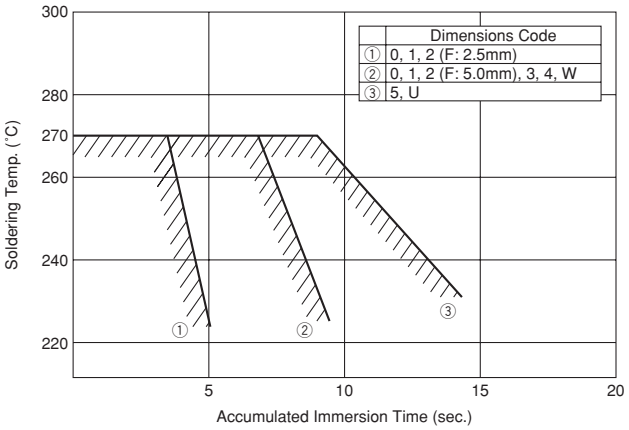

Perform soldering within tolerance range (shaded portion).

(2) Insertion of the Lead Wire

- When soldering, insert the lead wire into the PCB without mechanically stressing the lead wire.
- Insert the lead wire into the PCB with a distance appropriate to the lead space.

⚠Note:

1. Export Control
   <For customers outside Japan>
   No Murata products should be used or sold, through any channels, for use in the design, development, production, utilization, maintenance or operation of, or otherwise contribution to (1) any weapons (Weapons of Mass Destruction [nuclear, chemical or biological weapons or missiles] or conventional weapons) or (2) goods or systems specially designed or intended for military end-use or utilization by military end-users.
   <For customers in Japan>
   For products which are controlled items subject to the “Foreign Exchange and Foreign Trade Law” of Japan, the export license specified by the law is required for export.
2. Please contact our sales representatives or product engineers before using the products in this catalog for the applications listed below, which require especially high reliability for the prevention of defects which might directly damage a third party's life, body or property, or when one of our products is intended for use in applications other than those specified in this catalog.
   ① Aircraft equipment ② Aerospace equipment
   ③ Undersea equipment ④ Power plant equipment
   ⑤ Medical equipment ⑥ Transportation equipment (vehicles, trains, ships, etc.)
   ⑦ Traffic signal equipment ⑧ Disaster prevention / crime prevention equipment
   ⑨ Data-processing equipment ⑩ Application of similar complexity and/or reliability requirements to the applications listed above
3. Product specifications in this catalog are as of January 2014. They are subject to change or our products in it may be discontinued without advance notice.
   Please check with our sales representatives or product engineers before ordering. If there are any questions,please contact our sales representatives or product engineers.
4. Please read rating and ⚠CAUTION (for storage, operating, rating, soldering, mounting and handling) in this catalog to prevent smoking and/or burning, etc.
5. This catalog has only typical specifications.Therefore, please approve our product specifications or transact the approval sheet for product specifications before ordering.
6. Please note that unless otherwise specified, we shall assume no responsibility whatsoever for any conflict or dispute that may occur in connection with the effect of our and/or a third party's intellectual property rights and other related rights in consideration of your use of our products and/or information described or contained in our catalogs. In this connection, no representation shall be made to the effect that any third parties are authorized to use the rights mentioned above under licenses without our consent.
7. No ozone depleting substances (ODS) under the Montreal Protocol are used in our manufacturing process.

Murata Manufacturing Co., Ltd.

http://www.murata.com/

Head Office
1-10-1, Higashi Kotari, Nagaokakyo-shi, Kyoto 617-8555, Japan
Phone: 81-75-951-9111

International Division
3-29-12, Shibuya, Shibuya-ku, Tokyo 150-0002, Japan
Phone: 81-3-5469-6123 Fax: 81-3-5469-6155 E-mail: intl@murata.co.jp

Компания «ЭлектроПласт» предлагает заключение долгосрочных отношений при поставках импортных электронных компонентов на взаимовыгодных условиях!

Наши преимущества:

- Оперативные поставки широкого спектра электронных компонентов отечественного и импортного производства напрямую от производителей и с крупнейших мировых складов;
- Поставка более 17-ти миллионов наименований электронных компонентов;
- Поставка сложных, дефицитных, либо снятых с производства позиций;
- Оперативные сроки поставки под заказ (от 5 рабочих дней);
- Экспресс доставка в любую точку России;
- Техническая поддержка проекта, помощь в подборе аналогов, поставка прототипов;
- Система менеджмента качества сертифицирована по Международному стандарту ISO 9001;
- Лицензия ФСБ на осуществление работ с использованием сведений, составляющих государственную тайну;
- Поставка специализированных компонентов (Xilinx, Altera, Analog Devices, Intersil, Interpoint, Microsemi, Aeroflex, Peregrine, Syfer, Eurofarad, Texas Instrument, Miteq, Cobham, E2V, MA-COM, Hittite, Mini-Circuits,General Dynamics и др.);

Помимо этого, одним из направлений компании «ЭлектроПласт» является направление «Источники питания». Мы предлагаем Вам помощь Конструкторского отдела:

- Подбор оптимального решения, техническое обоснование при выборе компонента;
- Подбор аналогов;
- Консультации по применению компонента;
- Поставка образцов и прототипов;
- Техническая поддержка проекта;
- Защита от снятия компонента с производства.

Как с нами связаться

Телефон: 8 (812) 309 58 32 (многоканальный)
Факс: 8 (812) 320-02-42
Электронная почта: org@eplast1.ru
Адрес: 198099, г. Санкт-Петербург, ул. Калинина, дом 2, корпус 4, литера А.