CLC021 SMPTE 259M Digital Video Serializer with EDH Generation and Insertion

Check for Samples: CLC021

FEATURES

- **SMPTE 259M Serial Digital Video Standard Compliant**
- **Supports All NTSC and PAL Standard Component and Composite Serial Video Data Rates**
- **No External Serial Data Rate Setting or VCO Filtering Components Required (1)**
- **Fast VCO Lock Time: <75 µs at 270 Mbps**
- **Built-In Self-Test (BIST) and Video Test Pattern Generator (TPG) with 16 Internal Patterns (1)**
- **Automatic EDH Character and Flag Generation and Insertion per SMPTE RP 165**
- **Non-SMPTE Mode Operation as Parallel-to-Serial Converter**
- **NRZ-to-NRZI Conversion Control**
- **HCMOS/LSTTL-Compatible Data and Control Inputs and Outputs for CLC021AVGZ-5.0, LVCMOS for CLC021AVGZ-3.3**
- **75Ω ECL-Compatible, Differential, Serial Cable-Driver Outputs**
- **Single Power Supply Operation: 5V (CLC021AVGZ-5.0) or 3.3V (CLC021AVGZ-3.3) in TTL or ECL Systems**
- **Low Power: Typically 235 mW**
- **JEDEC 44-Lead Metric PQFP Package**
- **Commercial Temperature Range 0°C to +70°C**

(1) Patents Applications Made or Pending.

APPLICATIONS

- **SMPTE 259M Parallel-to-Serial Digital Video Interfaces for:**
  - **Video Cameras**
  - **VTRs**
  - **Telecines**
  - **Video Test Pattern Generators and Digital Video Test Equipment**
  - **Video Signal Generators**
- **Non-SMPTE Video Applications**
- **Other High Data Rate Parallel/Serial Video and Data Applications**

DESCRIPTION

The CLC021 SMPTE 259M Digital Video Serializer with EDH Generation and Insertion is a monolithic integrated circuit that encodes, serializes and transmits bit-parallel digital data conforming to SMPTE 125M and 267M component video and SMPTE 244M composite video standards. The CLC021 can also serialize other 8- or 10-bit parallel data. The CLC021 operates at data rates from below 100 Mbps to over 400 Mbps. The serial data clock frequency is internally generated and requires no external frequency setting, trimming or filtering components*.

TYPICAL APPLICATION

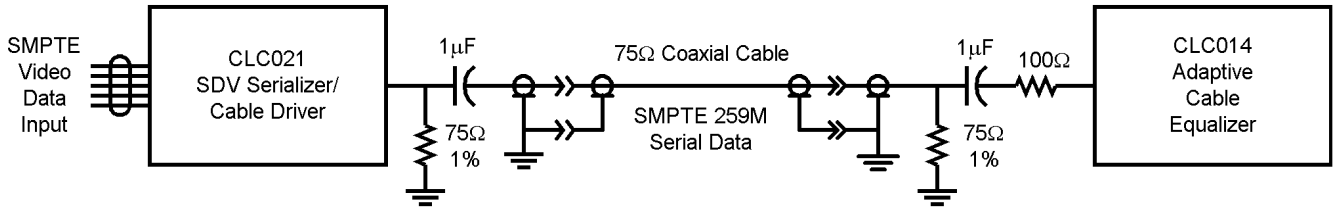

Please be aware that an important notice concerning availability, standard warranty, and use in critical applications of Texas Instruments semiconductor products and disclaimers thereto appears at the end of this data sheet.

All trademarks are the property of their respective owners.

PRODUCTION DATA information is current as of publication date. Products conform to specifications per the terms of the Texas Instruments standard warranty. Production processing does not necessarily include testing of all parameters.

Copyright © 2004, Texas Instruments Incorporated

DESCRIPTION (CONTINUED)

Functions performed by the CLC021 include: parallel-to-serial data conversion, ITU-R BT.601-4 input data clipping, data encoding using the SMPTE polynomial (X^9+X^4+1), data format conversion from NRZ to NRZI, parallel data clock frequency multiplication and encoding with the serial data, and differential, serial output data driving. The CLC021 has circuitry for automatic EDH character and flag generation and insertion per SMPTE RP-165. The CLC021 has an exclusive built-in self-test (BIST) and video test pattern generator (TPG) with 16 component video test patterns: reference black, PLL and EQ pathologicals and modified colour bars in 4:3 and 16:9 raster formats for NTSC and PAL formats*.

The CLC021 has inputs for enabling sync detection, non-SMPTE mode operation, enabling the EDH function, NRZ/NRZI mode control and an external reset control. Outputs are provided for H, V and F bits, new TRS sync character position indication, ancilliary data header detection, NTSC/PAL raster indication and PLL lock detect. Separate power pins for the output driver, VCO and the serializer improve power supply rejection, output jitter and noise performance.

The CLC021AVGZ-5.0V is powered by a single +5V supply. The CLC021AVGZ-3.3V is powered by a single +3.3V supply. Power dissipation is typically 235 mW including two 75Ω back-matched output loads. The device is packaged in a JEDEC metric 44-lead PQFP.

BLOCK DIAGRAM

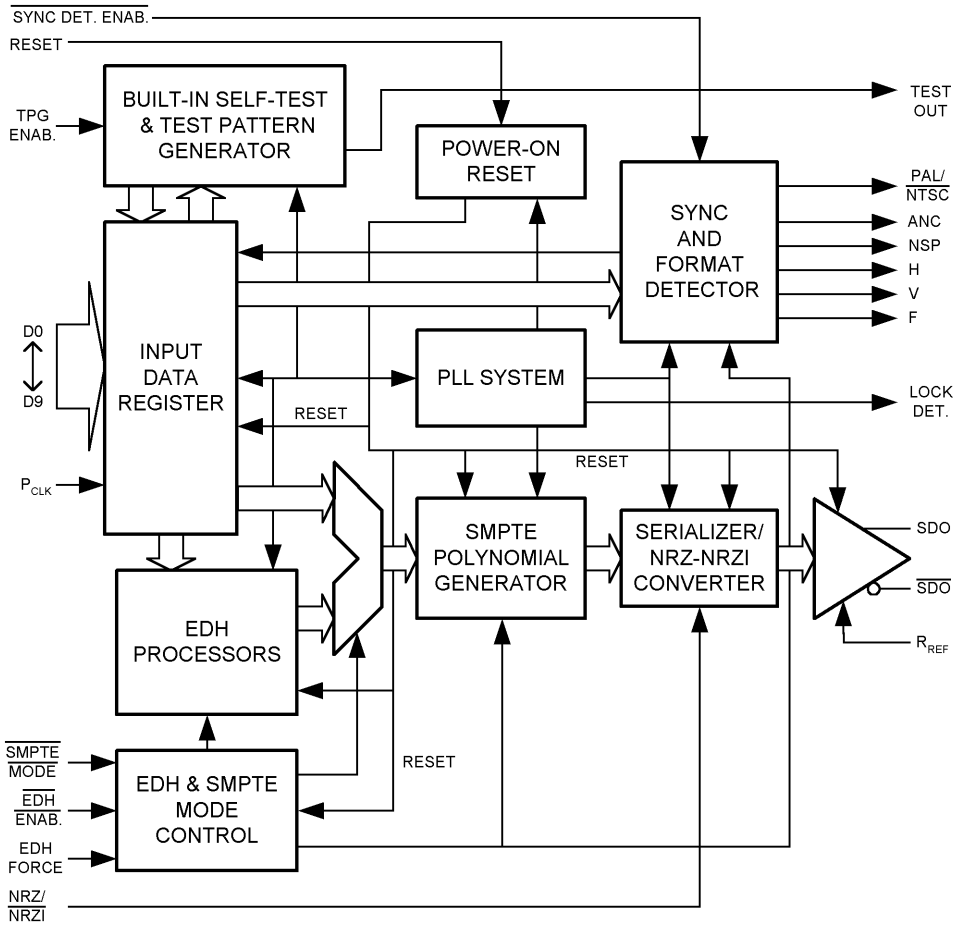

Copyright © 2004, Texas Instruments Incorporated

CONNECTION DIAGRAM

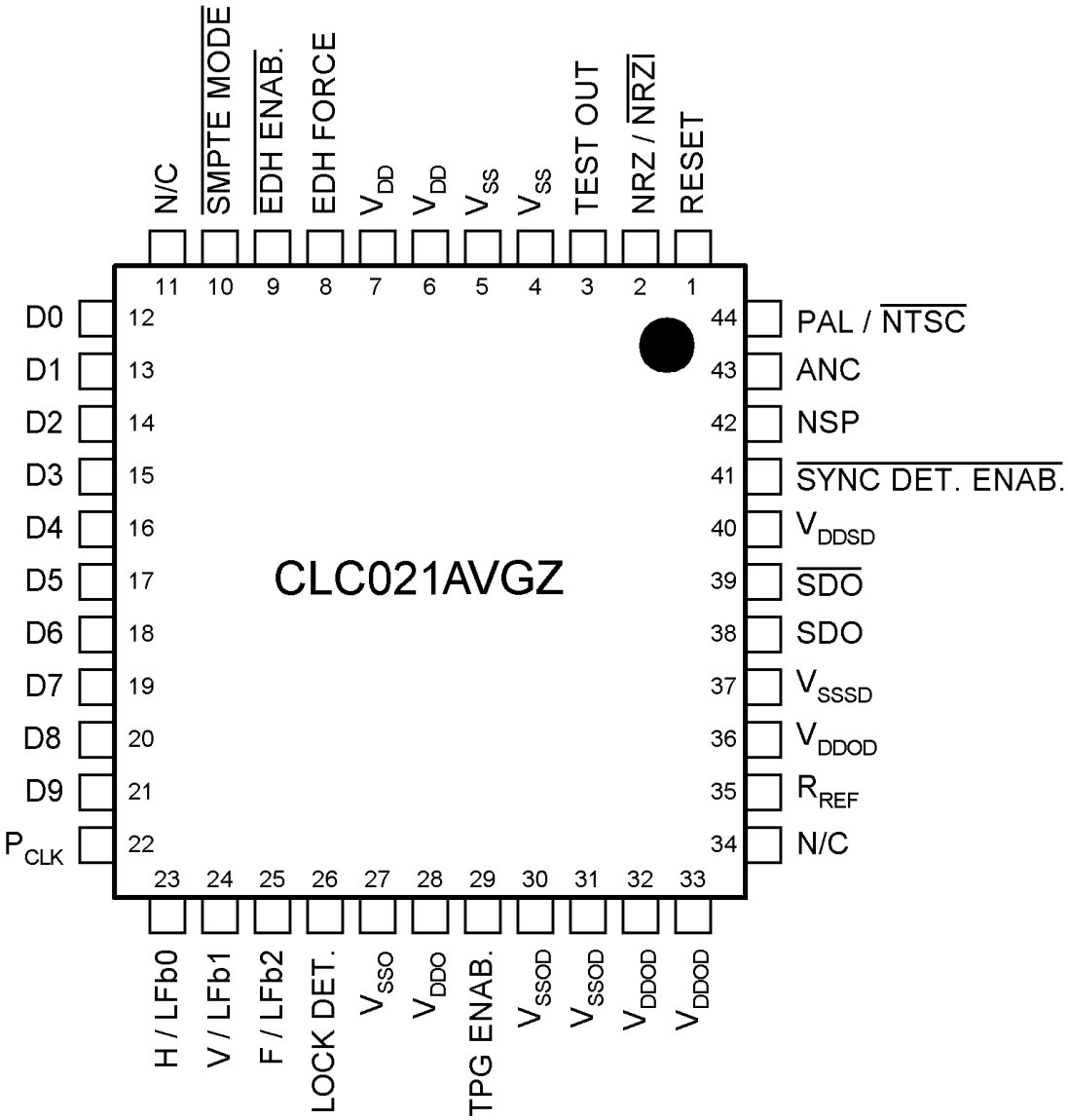

Figure 1. 44-Pin Metric PQFP
See Package Number PGB0044A

These devices have limited built-in ESD protection. The leads should be shorted together or the device placed in conductive foam during storage or handling to prevent electrostatic damage to the MOS gates.

ABSOLUTE MAXIMUM RATINGS (1)(2)

Supply Voltage (V_{DD}−V_{SS})		CLC021AVGZ-5.0V	6.0V
		CLC021AVGZ-3.3V	4.0V
CMOS/TTL Input Voltage (V_I)		CLC021AVGZ-5.0V	−0.5V to V_{DD}+0.5V
		CLC021AVGZ-3.3V	-0.3V to V_{DD}+0.3V
CMOS/TTL Output Voltage (V_O)		CLC021AVGZ-5.0V	−0.5V to V_{DD}+0.5V
		CLC021AVGZ-3.3V	-0.3V to V_{DD}+0.3V
CMOS/TTL Input Current (single input)		V_I = V_{SS} −0.5V:	−5 mA
		V_I = V_{DD} +0.5V:	+5 mA
Input Current, Other Inputs			±1 mA
CMOS/TTL Output Source/Sink Current			±16 mA
SDO Output Source Current			22 mA
Package Thermal Resistance	θ_{JA} 44-lead Metric PQFP	(@ 0 LFM airflow)	60°C/W
		(@ 500 LFM airflow)	43°C/W
	θ_{JC} 44-lead Metric PQFP		17°C/W
Storage Temp. Range			−65°C to +150°C
Junction Temperature			+150°C
Lead Temperature		Soldering 4 Sec	+260°C
ESD Rating (HBM)			2 kV
ESD Rating (MM)			150V
Transistor Count			33,400

(1) Absolute Maximum Ratings are those parameter values beyond which the life and operation of the device cannot be ensured. The stating herein of these maximums shall not be construed to imply that the device can or should be operated at or beyond these values. The table of Electrical Characteristics specifies acceptable device operating conditions.
(2) It is anticipated that this device will not be offered in a military qualified version. If Military/Aerospace specified devices are required, please contact the Texas Instruments Sales Office / Distributors for availability and specifications.

RECOMMENDED OPERATING CONDITIONS

Supply Voltage (V_{DD}−V_{SS})	CLC021AVGZ-5.0	5.0V ±10%
	CLC021AVGZ-3.3	3.3V ±10%
CMOS/TTL Input Voltage		V_{SS} to V_{DD}
Maximum DC Bias on SDO pins	CLC021AVGZ-5.0	3.0V ±10%
	CLC021AVGZ-3.3	1.3V ±10%
P_{CLK} Frequency Range		10 to 40MHz
P_{CLK} Duty Cycle		45 to 55%
D_N and P_{CLK} Rise/Fall Time		1.0 to 3.0 ns
Operating Free Air Temperature (T_A)		0°C to +70°C

Copyright © 2004, Texas Instruments Incorporated

DC ELECTRICAL CHARACTERISTICS—CLC021AVGZ-5.0

Over Supply Voltage and Operating Temperature ranges, unless otherwise specified (1)(2).

Symbol	Parameter	Conditions	Reference	Min	Typ	Max	Units
V_{IH}	Input Voltage High Level		All CMOS Inputs	2.0		V_{DD}	V
V_{IL}	Input Voltage Low Level			V_{SS}		0.8	V
I_{IH}	Input Current High Level	$V_{IH} = V_{DD}$			+40	+60	µA
I_{IL}	Input Current Low Level	$V_{IL} = V_{SS}$			-1	-20	µA
V_{OH}	CMOS Output Voltage High Level	I_{OH} = −10 mA	All CMOS Outputs	2.4	4.7	V_{DD}	V
V_{OL}	CMOS Output Voltage Low Level	I_{OL} = +10 mA		0.0	0.3	V_{SS} + 0.5V	V
V_{SDO}	Serial Driver Output Voltage	R_L = 75Ω 1%, R_{REF} = 1.69 kΩ 1%, See Figure 3	SDO, $\overline{SDO}$	700	800	900	mV_{P-P}
I_{DD}	Power Supply Current, Total	R_L = 75Ω 1%, R_{REF} = 1.69 kΩ 1%, P_{CLK} = 27 MHz, NTSC Colour Bar Pattern, See Figure 3			47	60	mA

(1) Current flow into device pins is defined as positive. Current flow out of device pins is defined as negative. All voltages are stated referenced to V_{SS} = 0V.
(2) Typical values are stated for V_{DD} = +5.0V (CLC021AVGZ-5.0) or +3.3V (CLC021AVGZ-3.3) and T_A = +25°C.

DC ELECTRICAL CHARACTERISTICS—CLC021AVGZ-3.3

Over Supply Voltage and Operating Temperature ranges, unless otherwise specified (1)(2).

Symbol	Parameter	Conditions	Reference	Min	Typ	Max	Units
V_{IH}	Input Voltage High Level		All CMOS Inputs	2.0		V_{DD}	V
V_{IL}	Input Voltage Low Level			V_{SS}		0.6	V
I_{IH}	Input Current High Level	$V_{IH} = V_{DD}$			+22	+60	µA
I_{IL}	Input Current Low Level	$V_{IL} = V_{SS}$			-1	-20	µA
V_{OH}	CMOS Output Voltage High Level	I_{OH} = −8 mA	All CMOS Outputs	2.4	3.0	V_{DD}	V
V_{OL}	CMOS Output Voltage Low Level	I_{OL} = +8 mA		0.0	0.3	V_{SS} + 0.5V	V
V_{SDO}	Serial Driver Output Voltage	R_L = 75Ω 1%, R_{REF} = 1.69 kΩ 1%, See Figure 3	SDO, $\overline{SDO}$	720	800	880	mV_{P-P}
I_{DD}	Power Supply Current, Total	R_L = 75Ω 1%, R_{REF} = 1.69 kΩ 1%, P_{CLK} = 27 MHz, NTSC Colour Bar Pattern, See Figure 3			33	55	mA

(1) Current flow into device pins is defined as positive. Current flow out of device pins is defined as negative. All voltages are stated referenced to V_{SS} = 0V.
(2) Typical values are stated for V_{DD} = +5.0V (CLC021AVGZ-5.0) or +3.3V (CLC021AVGZ-3.3) and T_A = +25°C.

Copyright © 2004, Texas Instruments Incorporated

AC ELECTRICAL CHARACTERISTICS—CLC021AVGZ-5.0

Over Supply Voltage and Operating Temperature ranges, unless otherwise specified (1).

Symbol	Parameter	Conditions	Reference	Min	Typ	Max	Units
BR_{SDO}	Serial Data Rate	See (2)	SDO, $\overline{SDO}$	100		400	Mbps
$F_{P_{CLK}}$	Reference Clock Input Frequency		P_{CLK}	10		40	MHz
	Reference Clock Duty Cycle		P_{CLK}	45	50	55	%
t_r, t_f	Rise Time, Fall Time		D_N, P_{CLK}	1.0	1.5	3.0	ns
t_j	Serial Output Jitter	270 Mbps (3), See Figure 3	SDO, $\overline{SDO}$		220		ps_{P-P}
t_{jit}	Serial Output Jitter	See (2)(4)			100	200	ps_{P-P}
t_r, t_f	Rise Time, Fall Time	20%–80% (2)(4)		500	800	1500	ps
	Output Overshoot	See (4)			1		%
t_{LOCK}	Lock Time	See (2)(5)			75		µs
t_{SU}	Setup Time	See (4) and Figure 4	D_N to P_{CLK}	3	2		ns
t_{HLD}	Hold Time	See (4) and Figure 4	D_N from P_{CLK}	3	2		ns
L_{GEN}	Output Inductance	See (4)	SDO, $\overline{SDO}$		6		nH
R_{GEN}	Output Resistance	See (4)			25k		Ω

(1) Typical values are stated for V_{DD} = +5.0V (CLC021AVGZ-5.0) or +3.3V (CLC021AVGZ-3.3) and T_A = +25°C.
(2) R_L = 75Ω, AC-coupled @ 270 M_{bps}, R_{REF} = 1.69 kΩ 1%, See TEST LOADS and Figure 3.
(3) CLC021 mounted in the SD021EVK board, configured in BIST mode (NTSC colour bars) with P_{CLK} = 27 MHz derived from Tektronix TG2000 black-burst reference. Timing jitter measured with Tektronix VM700T using jitter measurement FFT mode, frame rate, 1 kHz filter bandwidth, Hanning window.
(4) Specification is ensured by design.
(5) Measured from rising-edge of first P_{CLK} cycle until Lock Detect output goes high (true).

AC ELECTRICAL CHARACTERISTICS—CLC021AVGZ-3.3

Over Supply Voltage and Operating Temperature ranges, unless otherwise specified (1).

Symbol	Parameter	Conditions	Reference	Min	Typ	Max	Units
BR_{SDO}	Serial Data Rate	See (2)	SDO, $\overline{SDO}$	100		400	Mbps
$F_{P_{CLK}}$	Reference Clock Input Frequency		P_{CLK}	10		40	MHz
	Reference Clock Duty Cycle		P_{CLK}	45	50	55	%
t_r, t_f	Rise Time, Fall Time		D_N, P_{CLK}	1.0	1.5	3.0	ns
t_j	Serial Output Jitter	270 Mbps (3), See Figure 3	SDO, $\overline{SDO}$		220		ps_{P-P}
t_{jit}	Serial Output Jitter	See (2)(4)			100	200	ps_{P-P}
t_r, t_f	Rise Time, Fall Time	20%–80% (2)(4)		500	800	1500	ps
	Output Overshoot	See (4)			1		%
t_{LOCK}	Lock Time	See (2)(5)			75		µs
t_{SU}	Setup Time	See (4) and Figure 4	D_N to P_{CLK}	4	2		ns
t_{HLD}	Hold Time	See (4) and Figure 4	D_N from P_{CLK}	4	2		ns
L_{GEN}	Output Inductance	See (4)	SDO, $\overline{SDO}$		6		nH
R_{GEN}	Output Resistance	See (4)			25k		Ω

(1) Typical values are stated for V_{DD} = +5.0V (CLC021AVGZ-5.0) or +3.3V (CLC021AVGZ-3.3) and T_A = +25°C.
(2) R_L = 75Ω, AC-coupled @ 270 M_{bps}, R_{REF} = 1.69 kΩ 1%, See TEST LOADS and Figure 3.
(3) CLC021 mounted in the SD021EVK board, configured in BIST mode (NTSC colour bars) with P_{CLK} = 27 MHz derived from Tektronix TG2000 black-burst reference. Timing jitter measured with Tektronix VM700T using jitter measurement FFT mode, frame rate, 1 kHz filter bandwidth, Hanning window.
(4) Specification is ensured by design.
(5) Measured from rising-edge of first P_{CLK} cycle until Lock Detect output goes high (true).

Copyright © 2004, Texas Instruments Incorporated

TEST LOADS

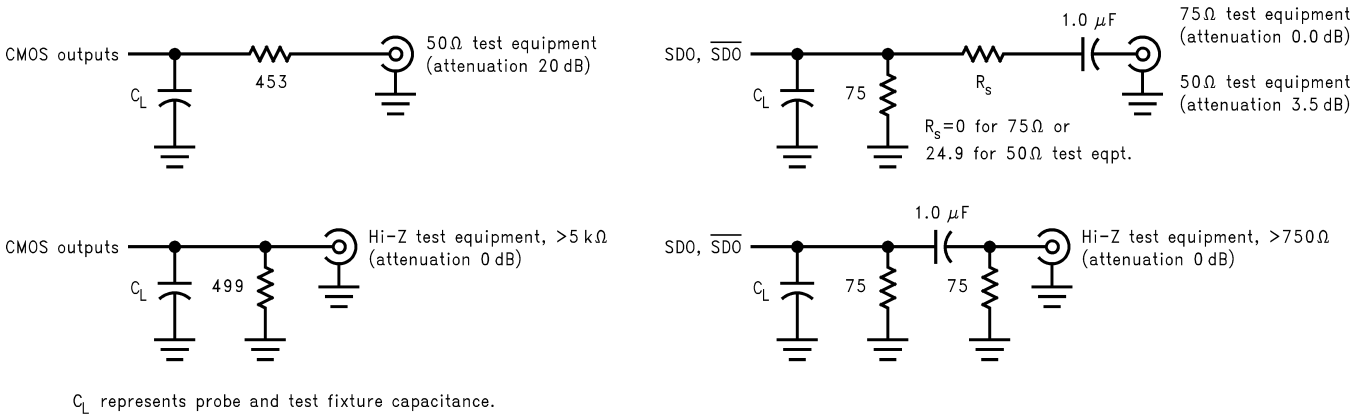

Figure 2. Test Loads

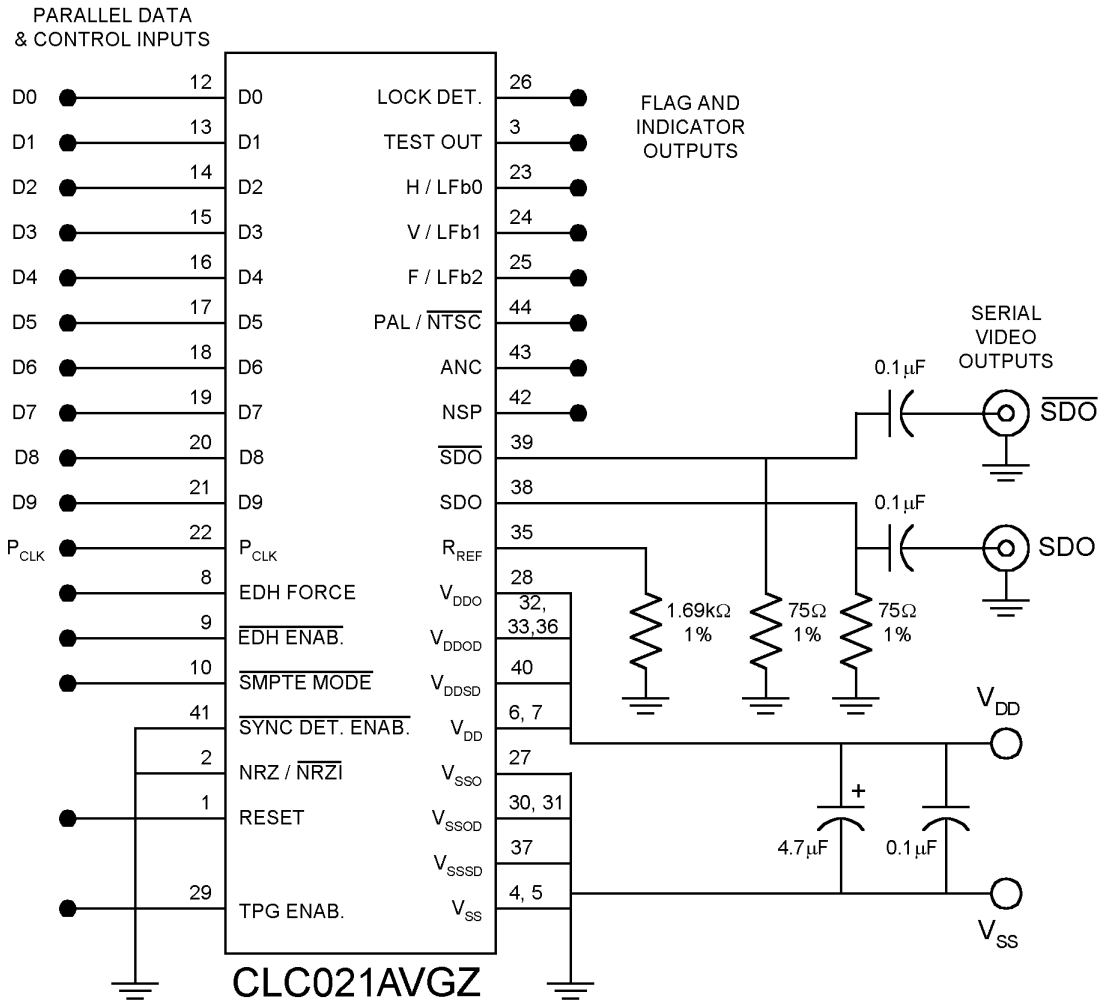

Figure 3. Test Circuit

TIMING DIAGRAM

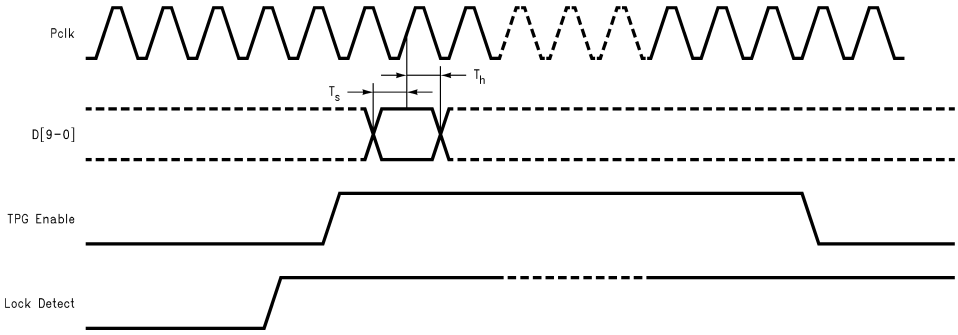

Figure 4. Setup and Hold Timing

Copyright © 2004, Texas Instruments Incorporated

DEVICE OPERATION

The CLC021 SMPTE 259M Serial Digital Video Serializer is used in digital video signal origination equipment: cameras, video tape recorders, telecines and video test and other equipment. It converts parallel component or composite digital video signals into serial format. Logic levels within this equipment are normally TTL-compatible as produced by CMOS or bipolar logic devices. The encoder produces ECL-compatible serial digital video (SDV) signals conforming to SMPTE 259M-1997. The CLC021 operates at all standard SMPTE and ITU-R parallel data rates. In addition, the CLC021 can serialize other 8- and 10-bit data.

VIDEO DATA PROCESSING CIRCUITS

The **input data register** accepts 8- or 10-bit parallel data and clock signals having HCMOS/LSTTL-compatible signal levels. Parallel data may conform to any of several standards: SMPTE 125M, SMPTE 267M, SMPTE 244M or ITU-R BT.601. If the data is 8-bit, it is converted to a 10-bit representation according to the type of data being input: component 4:2:2 per SMPTE 259M paragraph 7.1.1, composite NTSC per paragraph 8.1.1 or composite PAL per paragraph 9.1.1. Eight-bit video data corresponds to the upper 8 bits of the 10-bit video data word and is MSB-aligned. Output from this register feeds the TRS (sync) character detector, SMPTE polynomial generator/serializer and the EDH polynomial generators/serializers and control system. All parallel data and clock inputs have internal pull-down devices.

The **sync detector** or TRS character detector receives data from the input register. The detection function is controlled by Sync Detect Enable, a low-true, TTL-compatible, external signal. Synchronization words, the timing reference signals (TRS), start-of-active-video (SAV) and end-of-active-video (EAV) are defined in SMPTE 125M and 244M. The sync detector supplies control signals to the SMPTE polynomial generator to identify the presence of valid video data, and to the EDH control block. In SMPTE mode, TRS character LSB-clipping as prescribed in ITU-R BT.601 is enabled. LSB-clipping causes all TRS characters with a value between 000h and 003h to be forced to 000h and all TRS characters with a value between 3FCh and 3FFh to be forced to 3FFh. Clipping is done prior to encoding or EDH character generation. This function is disabled in non-SMPTE mode operation.

Outputs from the sync detector are:

1. **H, V, and F or Line/Field ID**—For component video, these are registered outputs corresponding to input TRS data bits 6, 7 and 8, respectively. These outputs are disabled in non-SMPTE mode. The outputs are active HIGH-true. For composite video, these outputs correspond to the line and field ID encoded as input parallel data bits 2 (MSB) through 0. These outputs are registered for the duration of the applicable field.
2. **NSP**—New Sync Position: A function and output indicating that a new or out-of-place TRS character has been detected. This output remains active for at least one horizontal line period (reset by EAV) or unless re-activated by a subsequent new or out-of-place TRS. Activation of this function flushes the existing state of the machine reseting the EDH generator, SMPTE polynomial generator, serializer and NRZ-NRZI converter. This function is disabled in non-SMPTE mode operation. The output is active HIGH-true.
3. **ANC**—Ancilliary data location output: Indicates that the ancilliary data header (component) or flag (composite) has been detected. The output is a pulse having a duration of one P_{CLK} period. The output is active HIGH-true.

SMPTE POLYNOMIAL GENERATOR AND CONTROLS

The **$\overline{\text{SMPTE Mode}}$** input allows the CLC021 to function both as a full SMPTE 259M encoder or general-purpose 8- or 10-bit serializer. SMPTE mode is enabled when this input is LOW. Non-SMPTE mode is enabled when this pin is HIGH. This pin is pulled internally to V_{SS} when unconnected. When in SMPTE mode, the SMPTE polynomial generator; TRS sync detection circuitry; EDH control circuitry; H, V, F and NSP outputs and TRS clipping are enabled.

The **SMPTE polynomial generator** accepts the parallel video data and encodes it using the polynomial $X^9 + X^4 + 1$ as specified in SMPTE 259M (1997 rev.), paragraph 5 and Annex C. The transmission bit order is LSB-first, per paragraph 6.

Copyright © 2004, Texas Instruments Incorporated

NRZ-TO-NRZI CONVERTER

The **NRZ-to-NRZI converter** accepts NRZ serial data from the SMPTE and EDH polynomial genertors and converts it to NRZI using the polynomial (X + 1) per SMPTE 259M, paragraph 5.2 and Annex C. The converter's output goes to the output buffer amplifier. The **NRZ/$\overline{\text{NRZI}}$ input** enables this conversion function. Conversion from NRZ to NRZI is enabled when the input is a logic LOW. Conversion to NRZI is disabled when this input is a logic-HIGH. This function is not affected by the SMPTE mode control input. The input pin is pulled internally to V_{SS} (NRZI enabled) when unconnected.

EDH SYSTEM OPERATION

The CLC021 has EDH character and flag generation and insertion circuitry which operates as proposed in SMPTE RP-165. Inputs and circuitry are provided to control generation and automatic insertion of the EDH check words at proper locations in the serial data output.

The **EDH polynomial generators** accept parallel data from the input register and generate 16-bit serial check words using the polynomial $X^{16} + X^{12} + X^{6} + 1$. Separate calculations are made for each video field prior to serialization. Separate CRCs for the full-field and active picture along with status flags are inserted and serially transmitted with the other data. Upon being reset, the initial state of all EDH check characters is 00h.

The **EDH control** system accepts input from the sync detector and controls the EDH polynomial generator and SMPTE/EDH polynomial insertion multiplexer. **EDH Enable**, an external TTL-compatible, low-true input, enables this circuitry. The controller inserts the EDH check words in the serial data stream at the correct positions in the ancilliary data space per SMPTE 259M paragraph 7.3, 8.4.4 or 9.4.4 and per SMPTE RP-165. Ancilliary data space is formatted per SMPTE 291M.

The **EDH Force** control input causes the insertion of new EDH checkwords and flags into the serial output regardless of the previous condition of EDH checkwords and flags in the input parallel data. This function may be used in situations where video content has been editted thus making the previous EDH information invalid.

The **$\overline{\text{NTSC}}$/PAL** output indicates the type of component or composite data standard being input to the CLC021. This output is useful for troubleshooting or may be used to drive a panel indicator. The output is high when 625-line PAL data is being input and low when 525-line NTSC data is being input.

PHASE-LOCKED LOOP AND VCO

The **phase-locked loop** (PLL) system generates the output serial data clock at 10× the parallel data clock frequency. This system consists of a VCO, divider chain, phase-frequency detector and internal loop filter. The VCO free-running frequency is internally set. The PLL automatically generates the appropriate frequency for the serial clock rate using the parallel data clock (P_{CLK}) frequency as its reference. Loop filtering is internal to the CLC021. The VCO halts when no P_{CLK} signal is present or is inactive. P_{CLK} should be applied after power to the device.

The VCO has separate V_{SSO} and V_{DDO} power supply feeds, pins 27 and 28, which may be supplied power via an external low-pass filter, if desired. The PLL acquisition (lock) time is less than 75 µs @ 270 Mbps.

LOCK DETECT

The lock detect output (pin 26) of the phase-frequency detector is a logic HIGH when the loop is locked. The output is CMOS/TTL-compatible and is suitable for driving other CMOS devices or an LED indicator. The Lock Detect pin reports the status of the PLL. When P_{CLK} is lost, it will switch low at the event.

SERIAL DATA OUTPUT BUFFER

The current-mode **serial data outputs** provide low-skew complimentary or differential signals. The output buffer design can drive 75Ω coaxial cables (AC-coupled) or 10K/100K ECL/PECL-compatible devices (DC-coupled). Output levels are 800 mV_{P-P} ±10% into 75Ω AC-coupled, back-matched loads. The output level is 400 mV_{P-P} ±10% when DC-coupled into 75Ω. (See APPLICATION INFORMATION for details.) The 75Ω resistors connected to the SDO outputs are back-matching resistors. No series back-matching resistors should be used. Output level is controlled by the value of R_{REF} connected to pin 35. The value of R_{REF} is normally 1.69 kΩ, ±1%. The output buffer is static when the device is in an out-of-lock condition. Separate V_{SSSD} and V_{DDSD} power feeds, pins, 37 and 40 are provided for the serial output driver.

Copyright © 2004, Texas Instruments Incorporated

POWER-ON RESET AND RESET INPUT

The CLC021 has an internally controlled, automatic, **power-on-reset** circuit. Reset clears TRS detection circuitry, all latches, registers, counters and polynomial generators, sets the EDH characters to 00h and disables the serial output. The SDO outputs are tri-stated during power-on reset. The part will remain in the reset condition until the parallel input clock is applied.

An active-HIGH-true, manual **reset input** is available at pin 1. It resets both the digital and PLL blocks. The reset input has an internal pull-down device and is inactive when unconnected.

It is recommended that P_{CLK} not be asserted until at least 30 µs after power has reached V_{DD}min. See Figure 5. If manual reset is used during power-on, then P_{CLK} may be asserted at any time as long as manual reset is not de-asserted until V_{DD}min is reached. See Figure 6.

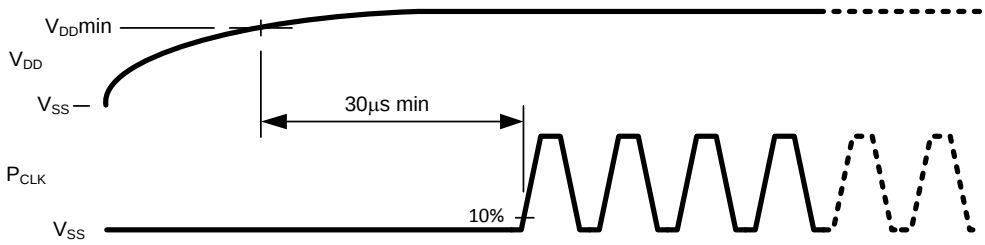

Figure 5. Power-On Reset Sequence

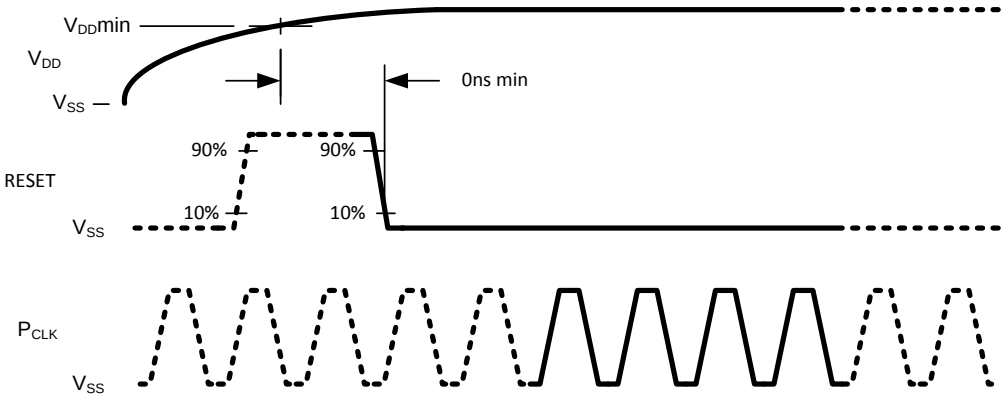

Figure 6. Power-On Reset Sequence with Manual Reset

BUILT-IN SELF-TEST (BIST)

The CLC021 has a **built-in self-test (BIST)** function. The BIST performs a comprehensive go/no-go test of the device. The test uses either a full-field colour bar for NTSC or a PLL pathological for PAL as the test data pattern. Data is input internally in the input data register, processed through the device and tested for errors. A go/no-go indication is given at the Test_Output. Table 1 gives device pin functions and Table 2 gives the test pattern codes used for this function. The signal level at Test_Output, pin 3, indicates a pass or fail condition.

The BIST is initiated by applying the code for the desired BIST to D0 through D3 (D9 through D4 are 00h) and a 27 MHz clock at the P_{CLK} input. Since all parallel data inputs are equipped with an internal pull-down device, only those inputs D0 through D3 which require a logic-1 need be pulled high. After the Lock_Detect output goes high indicating the VCO is locked on frequency, TPG_Enable, pin 29, is taken to a logic high. The Lock_Detect output may be temporarily connected to TPG_Enable to automate BIST operation. Test_Output, pin 3, is monitored for a pass/fail indication. If no errors have been detected, this output will go to a logic high level approximately 2 field intervals after TPG_Enable is taken high. If errors have been detected in the internal circuitry of the CLC021, Test_Output will remain low until the test is terminated. The BIST is terminated by taking TPG _Enable to a logic low. Continuous serial data output is available during the test.

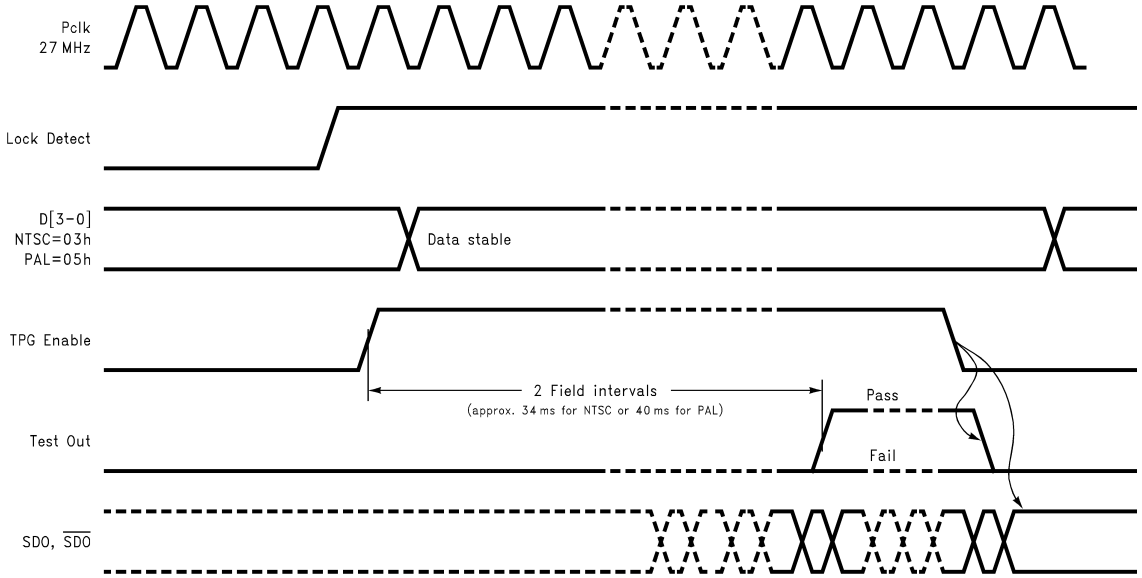

Figure 7. Built-In Self-Test Control Sequence

TEST PATTERN GENERATOR

The CLC021 includes an on-board **test pattern generator (TPG)**. Four full-field component video test patterns for both NTSC and PAL standards, and 4x3 and 16x9 raster sizes are produced. The test patterns are: flat-field black, PLL pathological, equalizer (EQ) pathological and a modified 75%, 8-colour vertical bar pattern. The pathologicals follow recommendations contained in SMPTE RP 178–1996 regarding the test data used. The colour bar pattern does not incorporate bandwidth limiting coding in the chroma and luma data when transitioning between the bars. For this reason, it may not be suitable for use as a visual test pattern or for input to video D-to-A conversion devices unless measures are taken to restrict the production of out-of-band frequency components.

The TPG is operated by applying the code for the desired test pattern to D0 through D3 (D4 through D9 are 00h). Since all parallel data inputs are equipped with internal pull-down devices, only those inputs D0 through D3 which require a logic-1 need be pulled high. Next, apply a 27 MHz or 36 MHz signal, appropriate to the raster size desired, at the P_{CLK} input and wait until the Lock_Detect output goes true indicating the VCO is locked on frequency. Then, take TPG_Enable, pin 29, to a logic high. The serial test pattern data appears on the SDO outputs. The Lock_Detect output may be temporarily connected to TPG_Enable to automate TPG operation. The TPG mode is exited by taking TPG_Enable to a logic low. Table 1 gives device pin functions for this mode. Table 2 gives the available test patterns and selection codes.

 Copyright © 2004, Texas Instruments Incorporated

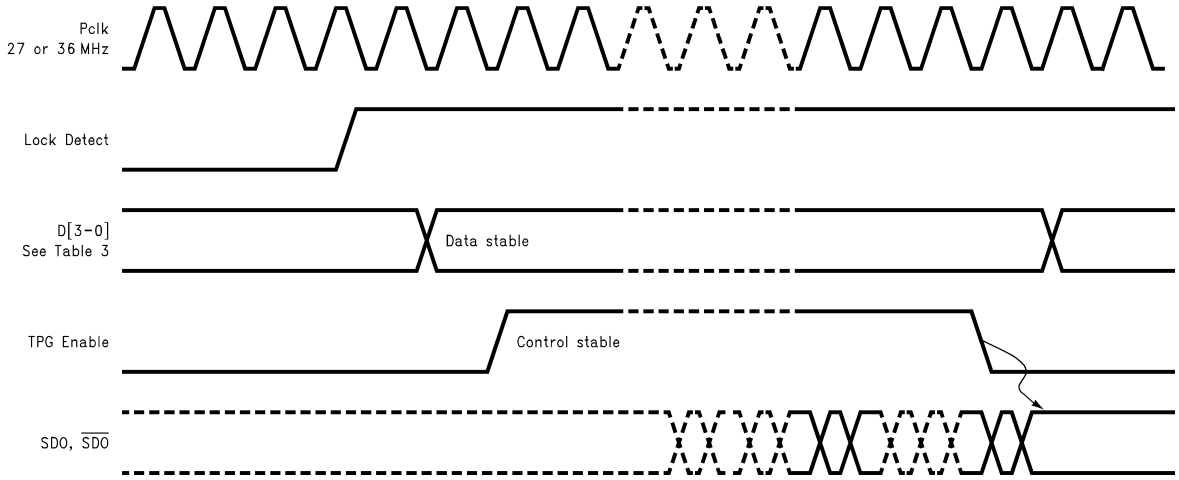

Figure 8. Test Pattern Generator Control Sequence

Table 1. BIST and Test Pattern Generator Control Functions

Pin	Name	Function
12	D0	TPG Code Input LSB
13	D1	TPG Code Input
14	D2	TPG Code Input
15	D3	TPG Code Input MSB
29	TPG_EN	TPG Enable, Active High True
3	Test_Out	BIST Pass/Fail Output. Pass=High (See text for Timing Requirements)

Table 2. Component Video Test Pattern Selection(1)

Standard	Frame	Test Pattern	D3	D2	D1	D0
NTSC	4x3	Flat-Field Black	0	0	0	0
NTSC	4x3	PLL Pathological	0	0	0	1
NTSC	4x3	EQ Pathological	0	0	1	0
NTSC	4x3	Colour Bars, 75%, 8-Bars (modified, see text), BIST	0	0	1	1
PAL	4x3	Flat-Field Black	0	1	0	0
PAL	4x3	PLL Pathological, BIST	0	1	0	1
PAL	4x3	EQ Pathological	0	1	1	0
PAL	4x3	Colour Bars, 75%, 8-Bars (modified, see text)	0	1	1	1
NTSC	16x9	Flat-Field Black	1	0	0	0
NTSC	16x9	PLL Pathological	1	0	0	1
NTSC	16x9	EQ Pathological	1	0	1	0
NTSC	16x9	Colour Bars, 75%, 8-bars (modified, see text)	1	0	1	1
PAL	16x9	Flat-Field Black	1	1	0	0
PAL	16x9	PLL Pathological	1	1	0	1
PAL	16x9	EQ Pathological	1	1	1	0
PAL	16x9	Colour Bars, 75%, 8-Bars (modified, see text)	1	1	1	1

(1) D9 through D4 = 0 (binary)

Copyright © 2004, Texas Instruments Incorporated

PIN DESCRIPTIONS[1]

Pin	Name	Description
1	Reset	Manual Reset Input (High True)
2	NRZ-$\overline{\text{NRZI}}$	NRZ-to-NRZI Conversion Control (NRZ=High, NRZI=Low)
3	Test Out	Test Out (BIST Pass/Fail Indicator)
4	V_{SS}	Negative Power Supply Input (Digital Logic)
5	V_{SS}	Negative Power Supply Input (Digital Logic)
6	V_{DD}	Positive Power Supply Input (Digital Logic)
7	V_{DD}	Positive Power Supply Input (Digital Logic)
8	EDH Force	Force Insertion of New EDH and Flags in Serial Output Data (High True)
9	$\overline{\text{EDH Enable}}$	EDH Enable Input (Low True)
10	$\overline{\text{SMPTE Mode}}$	SMPTE/non-SMPTE Mode Select Input (SMPTE Mode=Low)
11	N/C	No Connect
12	D0	Parallel Data Input (Internal Pull-Down to V_{SS})
13	D1	Parallel Data Input (Internal Pull-Down to V_{SS})
14	D2	Parallel Data Input (Internal Pull-Down to V_{SS})
15	D3	Parallel Data Input (Internal Pull-Down to V_{SS})
16	D4	Parallel Data Input (Internal Pull-Down to V_{SS})
17	D5	Parallel Data Input (Internal Pull-Down to V_{SS})
18	D6	Parallel Data Input (Internal Pull-Down to V_{SS})
19	D7	Parallel Data Input (Internal Pull-Down to V_{SS})
20	D8	Parallel Data Input (Internal Pull-Down to V_{SS})
21	D9	Parallel Data Input (Internal Pull-Down to V_{SS})
22	P_{CLK}	Parallel Clock Input (Internal Pull-Down to V_{SS})
23	H/Line-Field b0 (LSB)	H-Bit Output (Component); Line-Field ID (Composite)
24	V/Line-Field b1	V-Bit Output (Component); Line-Field ID (Composite)
25	F/Line-Field b2 (MSB)	F-Bit Output (Component); Line-Field ID (Composite)
26	Lock Detect	Lock Detector Output (High True)
27	V_{SSO}	Negative Power Supply Input (PLL Supply)
28	V_{DDO}	Positive Power Supply Input (PLL Supply)
29	TPG Enable	TPG Enable (High True)
30	V_{SSOD}	Negative Power Supply Input (PLL Digital Supply)
31	V_{SSOD}	Negative Power Supply Input (PLL Digital Supply)
32	V_{DDOD}	Positive Power Supply Input (PLL Digital Supply)
33	V_{DDOD}	Positive Power Supply Input (PLL Digital Supply)
34	N/C	No Connect
35	R_{REF}	Output Level Reference Resistor (1.69 kΩ, 1% Nominal Value)
36	V_{DDOD}	Positive Power Supply Input (PLL Digital Supply)
37	V_{SSSD}	Negative Power Supply Input (Output Driver)
38	SDO	Serial Data True Output
39	$\overline{\text{SDO}}$	Serial Data Complement Output
40	V_{DDSD}	Positive Power Supply Input (Output Driver)
41	$\overline{\text{Sync Detect Enable}}$	Parallel Data Sync Detection Enable Input (Low True)
42	NSP	New Sync Position Output
43	ANC	Ancilliary Data Header Flag Output
44	$\overline{\text{NTSC}}$/PAL	NTSC/PAL Mode Indicator Output (PAL=High, NTSC=Low)

(1) All CMOS/TTL inputs have internal pull-down devices.

Copyright © 2004, Texas Instruments Incorporated

APPLICATION INFORMATION

A typical application circuit for the CLC021 is shown in Figure 9. This circuit demonstrates the capabilities of the CLC021 and allows its evaluation in a variety of configurations. Assembled demonstration boards with more comprehensive evaluation options are available, part number SD021-5EVK (5V device) or SD021-3EVK (3.3V device). The boards may be ordered through any of Texas Instruments' sales offices. Complete circuit board layouts and schematics including Gerber photoplot files, for the demonstration boards are available on Texas Instruments' website in the application information for this device.

APPLICATION CIRCUIT

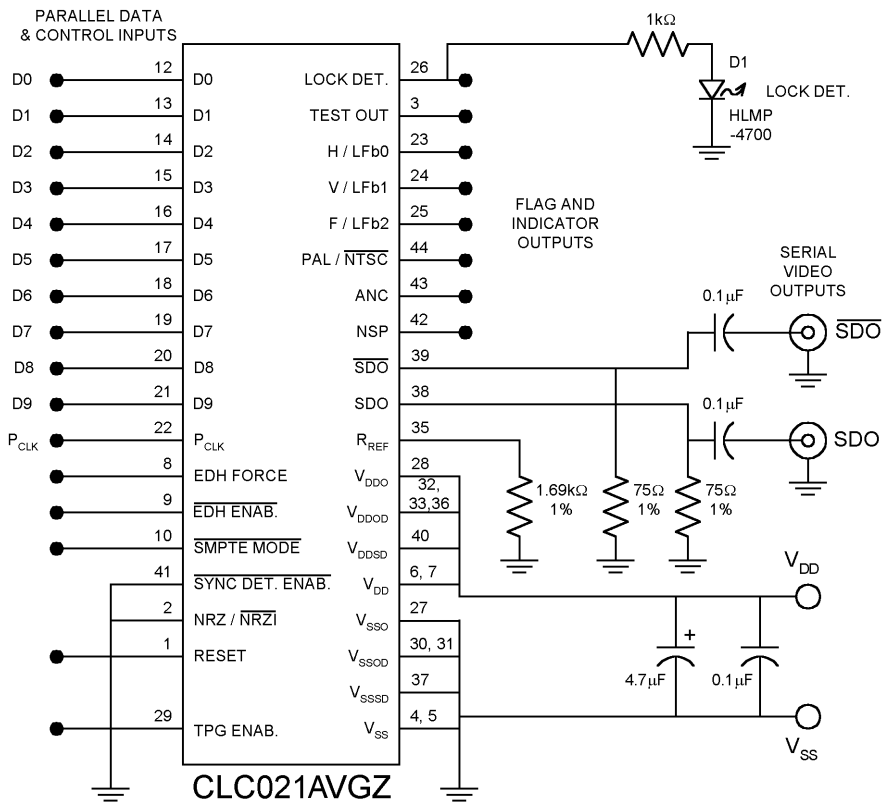

Figure 9. Typical Application Circuit

The SD021EVK application circuit boards, Figure 10, can accommodate different input and output drive and loading options. Pin headers are provided for input and control I/O signal access. Install the appropriate value resistor packs, 220Ω at RP1 and RP3 and 330Ω at RP2 and RP4, for TTL cabled interfaces before applying input signals. Install 51Ω resistor packs at RP2 and RP4 for signal sources requiring such loading. Remove any resistor packs at RP1 and RP3 when using 50Ω source loading.

The board's outputs may be DC interfaced to PECL inputs by first installing 124Ω resistors at R1B and R2B, changing R1A and R2A to 187Ω and replacing C1 and C2 with short circuits. The PECL inputs should be directly connected to J1 and J2 without cabling. If 75Ω cabling is used to connect the CLC021 to the PECL inputs, the voltage dividers used on the CLC021 outputs must be removed and re-installed on the circuit board where the PECL device is mounted. This will provide correct termination for the cable and biasing for both the CLC021's outputs and the PECL inputs. It is most important to note that a 75Ω or equivalent DC loading (measured with respect to the negative supply rail) must always be installed at both of the CLC021's SDO outputs to obtain proper signal levels from device. When using 75Ω Thevenin-equivalent load circuits, the DC bias applied to the SDO outputs should not exceed +3V (+1.3V for CLC021AVGZ-3.3) with respect to the negative supply rail. Serial output levels should be reduced to 400 mV_{p-p} by changing R_{REF} to 3.4 kΩ. This may be done by removing the Output Level shorting jumper on the post header.

The Test Out output is intended for monitoring by equipment having high impedance test loading (>500Ω). If the Lock Detect output is to be externally monitored, the attached monitoring circuit should present a DC resistance greater than 5 kΩ so as not to affect Lock Detect indicator operation.

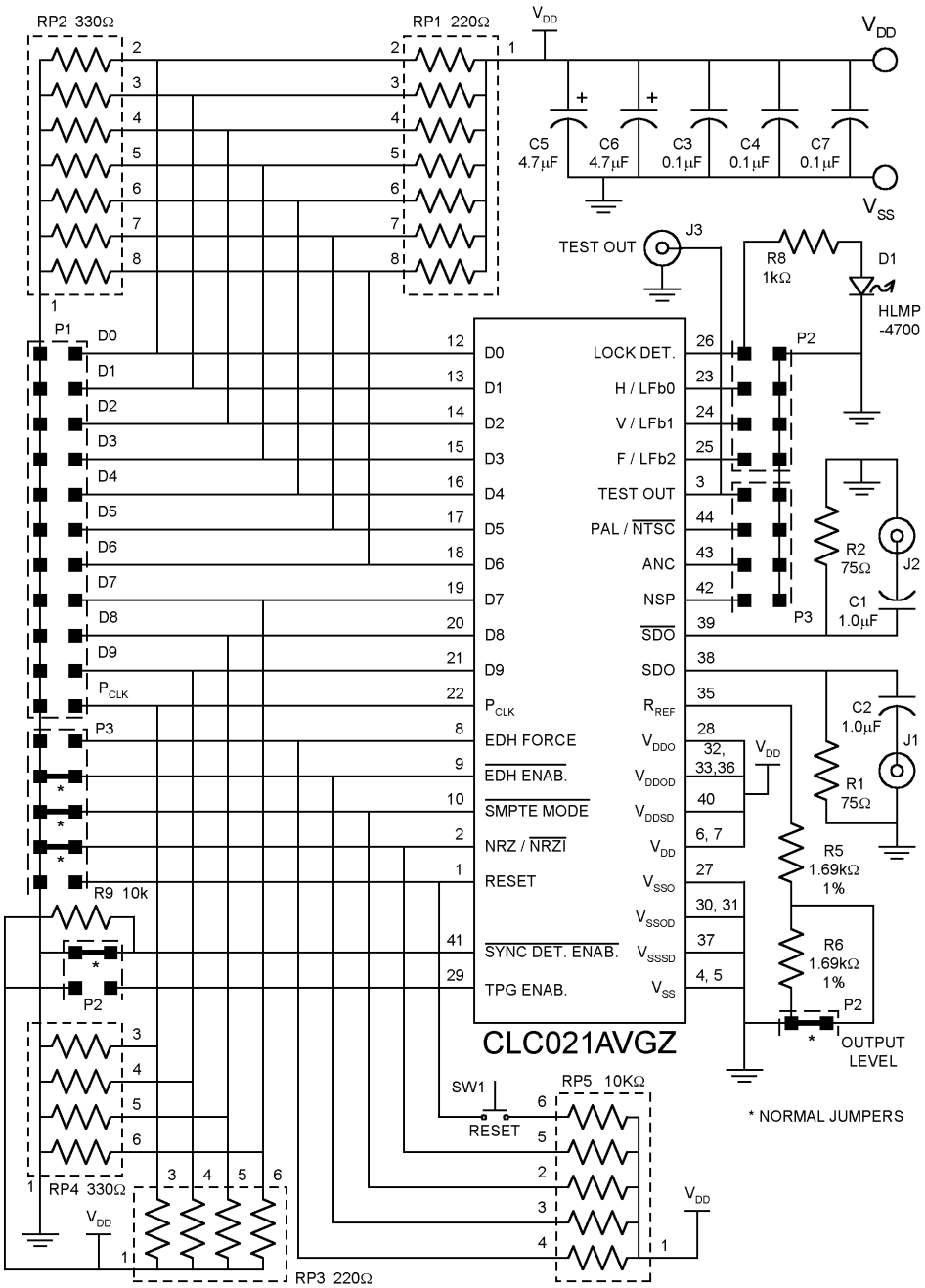

Connect LOCK DETECT to TPG ENABLE for test pattern generator function.
Remove RP1 & RP3 and replace RP2 & RP4 with 50Ω resistor packs for coax interfacing.
Install RP1-4 when using ribbon cable for input interfacing.
This board is designed for use with TTL power supplies only.

Figure 10. SD021EVK Schematic Diagram

Copyright © 2004, Texas Instruments Incorporated

MEASURING JITTER

The test method used to obtain the timing jitter value given in the AC Electrical Specification table is based on procedures and equipment described in SMPTE RP 192-1996. The recommended practice discusses several methods and indicator devices. An FFT method performed by standard video test equipment was used to obtain the data given in this data sheet. As such, the jitter characteristics (or jitter floor) of the measurement equipment, particularly the measurement analyzer, become integral to the resulting jitter value. The method and equipment were chosen so that the test can be easily duplicated by the design engineer using most standard digital video test equipment. In so doing, similar results should be achieved. The intrinsic jitter floor of the CLC021's PLL is approximately 25% of the typical jitter given in the electrical specifications. In production, device jitter is measured on automatic IC test equipment (ATE) using a different method compatible with that equipment. Jitter measured using this ATE yields values approximately 50% of those obtained using the video test equipment.

The jitter test setup used to obtain values quoted in the data sheet consists of:

- Texas Instruments SD021-5EVK (SD021-3EVK), CLC021 evaluation kit
- Tektronix TG2000 signal generation platform with DVG1 option
- Tektronix VM700T Option 1S Video Measurement Set
- Tektronix TDS 794D, Option C2 oscilloscope
- Tektronix P6339A passive probe
- 75Ω coaxial cable, 3 ft., Belden 8281 or RG59 (2 required)
- ECL-to-TTL/CMOS level converter/amplifier see Figure 12.

Apply the black-burst reference clock from the TG2000 signal generator's BG1 module 27 MHz clock output to the level converter input. The clock amplitude converter schematic is shown in Figure 12. Adjust the input bias control to give a 50% duty cycle output as measured on the oscilloscope/probe system. Connect the level translator to the SD021EVK board, connector P1, P_{CLK} pins (the outer-most row of pins is ground). Configure the SD021EVK to operate in the NTSC colour bars, BIST mode. Configure the VM700T to make the jitter measurement in the jitter FFT mode at the frame rate with 1 kHz filter bandwidth and Hanning window. Configure the setup as shown in Figure 11. Switch the test equipment on (from standby mode) and allow all equipment temperatures stabilize per manufacturer's recommendation. Measure the jitter value after allowing the instrument's reading to stabilize (about 1 minute). Consult the VM700T Video Measurement Set Option 1S Serial Digital Measurements User Manual (document number 071-0074-00) for details of equipment operation.

The VM700T measurement system's jitter floor specification at 270 Mbps is given as 200 ps ±20% (100 ps ±5% typical) of actual components from 50 Hz to 1 MHz and 200 ps +60%, -30% of actual components from 1 MHz to 10 MHz. To obtain the actual residual jitter of the CLC021, a root-sum-square adjustment of the jitter reading must be made to compensate for the measurement system's jitter floor specification. For example, if the jitter reading is 250 ps, the CLC021 residual jitter is the square root of $(250^2 - 200^2)$ = 150 ps. The accuracy limits of the reading as given above apply.

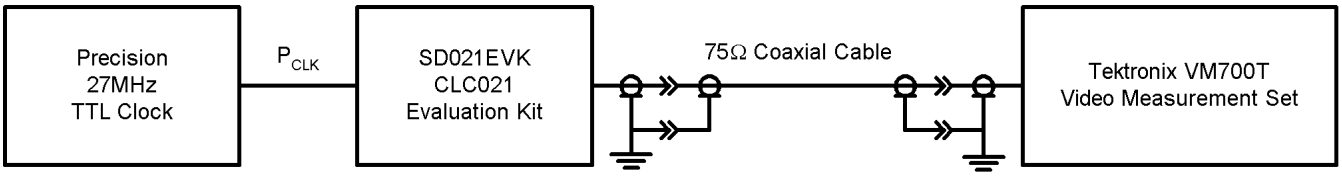

Figure 11. Jitter Test Circuit

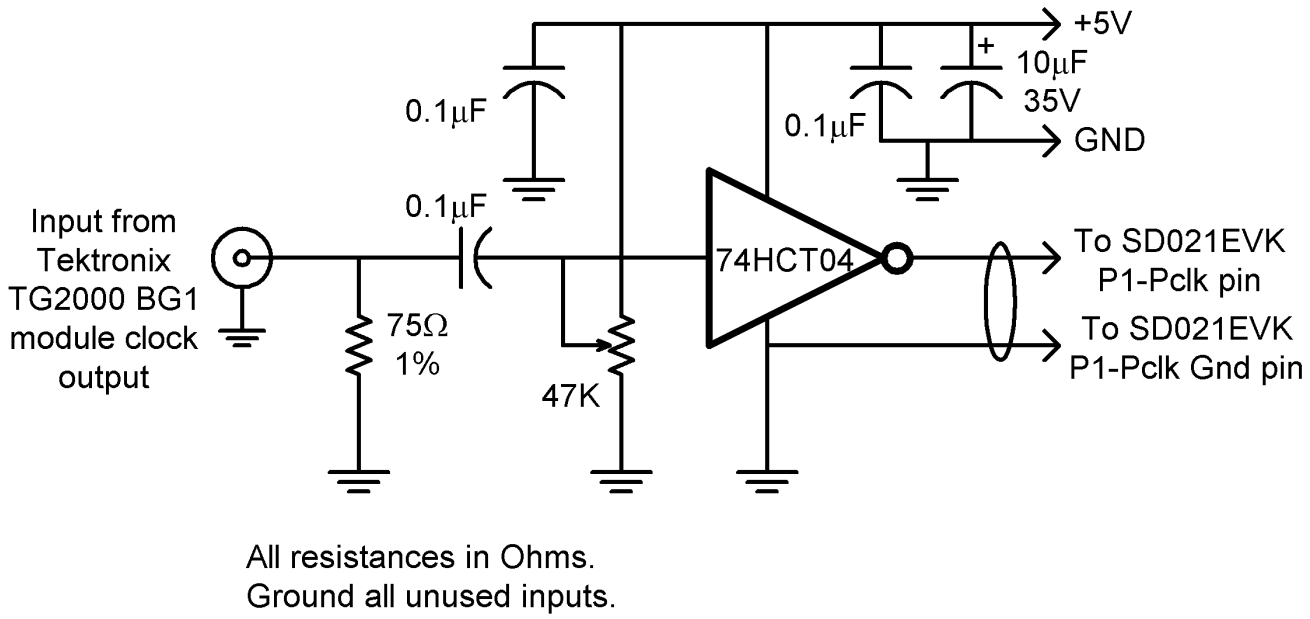

Figure 12. ECL-to-TTL/CMOS Level Converter/Amplifer

Copyright © 2004, Texas Instruments Incorporated

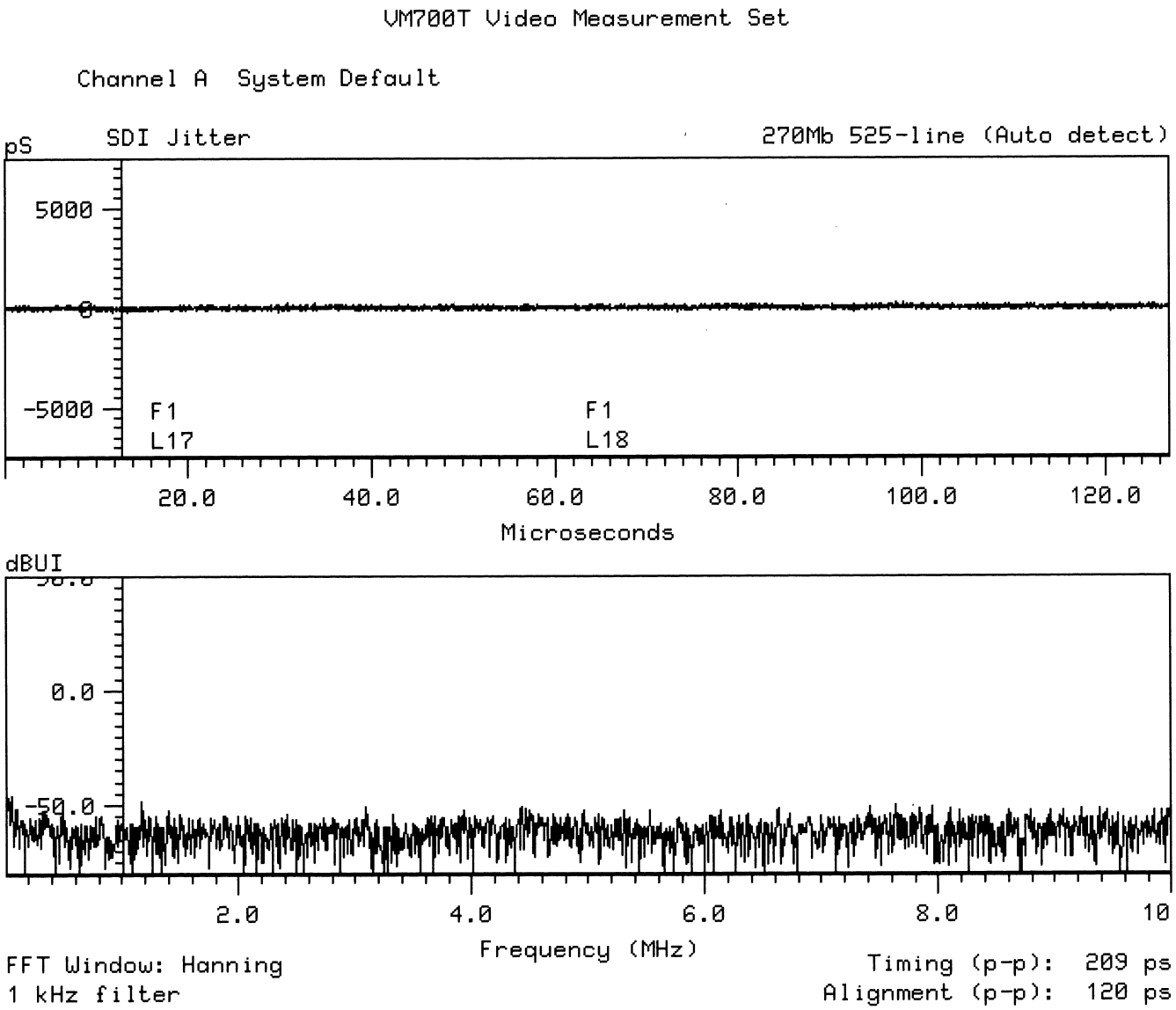

Figure 13. Jitter Plots

PCB LAYOUT AND POWER SYSTEM BYPASS RECOMMENDATIONS

Circuit board layout and stack-up for the CLC021 should be designed to provide noise-free power to the device. Good layout practice also will separate high frequency or high level inputs and outputs to minimize unwanted stray noise pickup, feedback and interference. Power system performance may be greatly improved by using thin dielectrics (4 to 10 mils) for power/ground sandwiches. This increases the intrinsic capacitance of the PCB power system which improves power supply filtering, especially at high frequencies, and makes the value and placement of external bypass capacitors less critical. External bypass capacitors should include both RF ceramic and tantalum electrolytic types. RF capacitors may use values in the range 0.01 µF to 0.1 µF. Tantalum capacitors may be in the range 2.2 µF to 10 µF. Voltage rating for tantalum capacitors should be at least 5X the power supply voltage being used. It is recommended practice to use two vias at each power pin of the CLC021 as well as all RF bypass capacitor terminals. Dual vias reduce the interconnect inductance by up to half, thereby reducing interconnect inductance and extending the effective frequency range of the bypass components.

Copyright © 2004, Texas Instruments Incorporated

The outer layers of the PCB may be flooded with additional V_{SS} (ground) plane. These planes will improve shielding and isolation as well as increase the intrinsic capacitance of the power supply plane system. Naturally, to be effective, these planes must be tied to the V_{SS} power supply plane at frequent intervals with vias. Frequent via placement also improves signal integrity on signal transmission lines by providing short paths for image currents which reduces signal distortion. The planes should be pulled back from all transmission lines and component mounting pads a distance equal to the width of the widest transmission line or the thickness of the dielectric separating the transmission line from the internal power or ground plane(s) whichever is greater. Doing so minimizes effects on transmission line impedances and reduces unwanted parasitic capacitances at component mounting pads.

In especially noisy power supply environments, such as is often the case when using switching power supplies, separate filtering may be used at the CLC021's VCO and output driver power pins. The CLC021 was designed for this situation. The digital section, VCO and output driver power supply feeds are independent (see and CONNECTION DIAGRAM for details). Supply filtering may take the form of L-section or pi-section, L-C filters in series with these V_{DD} inputs. Such filters are available in a single package from several manufacturers. Despite being independent feeds, all device power supplies should be applied simultaneously as from a common source. The CLC021 is free from power supply latch-up caused by circuit-induced delays between the device's three separate power feed systems.

Copyright © 2004, Texas Instruments Incorporated

PACKAGING INFORMATION

Orderable Device	Status (1)	Package Type	Package Drawing	Pins	Package Qty	Eco Plan (2)	Lead/Ball Finish	MSL Peak Temp (3)	Op Temp (°C)	Top-Side Markings (4)	Samples
CLC021AVGZ-3.3	ACTIVE	QFP	PGB	44	96	TBD	Call TI	Call TI	0 to 70	CLC021A VGZ-3.3	Samples
CLC021AVGZ-3.3/NOPB	ACTIVE	QFP	PGB	44	96	Green (RoHS & no Sb/Br)	SN	Level-3-260C-168 HR	0 to 70	CLC021A VGZ-3.3	Samples
CLC021AVGZ-5.0	ACTIVE	QFP	PGB	44	96	TBD	Call TI	Call TI	0 to 70		Samples
CLC021AVGZ-5.0/NOPB	ACTIVE	QFP	PGB	44	96	Green (RoHS & no Sb/Br)	SN	Level-3-260C-168 HR	0 to 70	CLC021A VGZ-5.0	Samples

(1) The marketing status values are defined as follows:
ACTIVE: Product device recommended for new designs.
LIFEBUY: TI has announced that the device will be discontinued, and a lifetime-buy period is in effect.
NRND: Not recommended for new designs. Device is in production to support existing customers, but TI does not recommend using this part in a new design.
PREVIEW: Device has been announced but is not in production. Samples may or may not be available.
OBSOLETE: TI has discontinued the production of the device.

(2) Eco Plan - The planned eco-friendly classification: Pb-Free (RoHS), Pb-Free (RoHS Exempt), or Green (RoHS & no Sb/Br) - please check http://www.ti.com/productcontent for the latest availability information and additional product content details.
TBD: The Pb-Free/Green conversion plan has not been defined.
Pb-Free (RoHS): TI's terms "Lead-Free" or "Pb-Free" mean semiconductor products that are compatible with the current RoHS requirements for all 6 substances, including the requirement that lead not exceed 0.1% by weight in homogeneous materials. Where designed to be soldered at high temperatures, TI Pb-Free products are suitable for use in specified lead-free processes.
Pb-Free (RoHS Exempt): This component has a RoHS exemption for either 1) lead-based flip-chip solder bumps used between the die and package, or 2) lead-based die adhesive used between the die and leadframe. The component is otherwise considered Pb-Free (RoHS compatible) as defined above.
Green (RoHS & no Sb/Br): TI defines "Green" to mean Pb-Free (RoHS compatible), and free of Bromine (Br) and Antimony (Sb) based flame retardants (Br or Sb do not exceed 0.1% by weight in homogeneous material)

(3) MSL, Peak Temp. -- The Moisture Sensitivity Level rating according to the JEDEC industry standard classifications, and peak solder temperature.

(4) Only one of markings shown within the brackets will appear on the physical device.

Important Information and Disclaimer: The information provided on this page represents TI's knowledge and belief as of the date that it is provided. TI bases its knowledge and belief on information provided by third parties, and makes no representation or warranty as to the accuracy of such information. Efforts are underway to better integrate information from third parties. TI has taken and continues to take reasonable steps to provide representative and accurate information but may not have conducted destructive testing or chemical analysis on incoming materials and chemicals. TI and TI suppliers consider certain information to be proprietary, and thus CAS numbers and other limited information may not be available for release.

In no event shall TI's liability arising out of such information exceed the total purchase price of the TI part(s) at issue in this document sold by TI to Customer on an annual basis.

IMPORTANT NOTICE

Texas Instruments Incorporated and its subsidiaries (TI) reserve the right to make corrections, enhancements, improvements and other changes to its semiconductor products and services per JESD46, latest issue, and to discontinue any product or service per JESD48, latest issue. Buyers should obtain the latest relevant information before placing orders and should verify that such information is current and complete. All semiconductor products (also referred to herein as “components”) are sold subject to TI’s terms and conditions of sale supplied at the time of order acknowledgment.

TI warrants performance of its components to the specifications applicable at the time of sale, in accordance with the warranty in TI’s terms and conditions of sale of semiconductor products. Testing and other quality control techniques are used to the extent TI deems necessary to support this warranty. Except where mandated by applicable law, testing of all parameters of each component is not necessarily performed.

TI assumes no liability for applications assistance or the design of Buyers’ products. Buyers are responsible for their products and applications using TI components. To minimize the risks associated with Buyers’ products and applications, Buyers should provide adequate design and operating safeguards.

TI does not warrant or represent that any license, either express or implied, is granted under any patent right, copyright, mask work right, or other intellectual property right relating to any combination, machine, or process in which TI components or services are used. Information published by TI regarding third-party products or services does not constitute a license to use such products or services or a warranty or endorsement thereof. Use of such information may require a license from a third party under the patents or other intellectual property of the third party, or a license from TI under the patents or other intellectual property of TI.

Reproduction of significant portions of TI information in TI data books or data sheets is permissible only if reproduction is without alteration and is accompanied by all associated warranties, conditions, limitations, and notices. TI is not responsible or liable for such altered documentation. Information of third parties may be subject to additional restrictions.

Resale of TI components or services with statements different from or beyond the parameters stated by TI for that component or service voids all express and any implied warranties for the associated TI component or service and is an unfair and deceptive business practice. TI is not responsible or liable for any such statements.

Buyer acknowledges and agrees that it is solely responsible for compliance with all legal, regulatory and safety-related requirements concerning its products, and any use of TI components in its applications, notwithstanding any applications-related information or support that may be provided by TI. Buyer represents and agrees that it has all the necessary expertise to create and implement safeguards which anticipate dangerous consequences of failures, monitor failures and their consequences, lessen the likelihood of failures that might cause harm and take appropriate remedial actions. Buyer will fully indemnify TI and its representatives against any damages arising out of the use of any TI components in safety-critical applications.

In some cases, TI components may be promoted specifically to facilitate safety-related applications. With such components, TI’s goal is to help enable customers to design and create their own end-product solutions that meet applicable functional safety standards and requirements. Nonetheless, such components are subject to these terms.

No TI components are authorized for use in FDA Class III (or similar life-critical medical equipment) unless authorized officers of the parties have executed a special agreement specifically governing such use.

Only those TI components which TI has specifically designated as military grade or “enhanced plastic” are designed and intended for use in military/aerospace applications or environments. Buyer acknowledges and agrees that any military or aerospace use of TI components which have ***not*** been so designated is solely at the Buyer's risk, and that Buyer is solely responsible for compliance with all legal and regulatory requirements in connection with such use.

TI has specifically designated certain components as meeting ISO/TS16949 requirements, mainly for automotive use. In any case of use of non-designated products, TI will not be responsible for any failure to meet ISO/TS16949.

Products		**Applications**	
Audio	www.ti.com/audio	Automotive and Transportation	www.ti.com/automotive
Amplifiers	amplifier.ti.com	Communications and Telecom	www.ti.com/communications
Data Converters	dataconverter.ti.com	Computers and Peripherals	www.ti.com/computers
DLP® Products	www.dlp.com	Consumer Electronics	www.ti.com/consumer-apps
DSP	dsp.ti.com	Energy and Lighting	www.ti.com/energy
Clocks and Timers	www.ti.com/clocks	Industrial	www.ti.com/industrial
Interface	interface.ti.com	Medical	www.ti.com/medical
Logic	logic.ti.com	Security	www.ti.com/security
Power Mgmt	power.ti.com	Space, Avionics and Defense	www.ti.com/space-avionics-defense
Microcontrollers	microcontroller.ti.com	Video and Imaging	www.ti.com/video
RFID	www.ti-rfid.com		
OMAP Applications Processors	www.ti.com/omap	**TI E2E Community**	e2e.ti.com
Wireless Connectivity	www.ti.com/wirelessconnectivity		

Mailing Address: Texas Instruments, Post Office Box 655303, Dallas, Texas 75265
Copyright © 2013, Texas Instruments Incorporated

Компания «ЭлектроПласт» предлагает заключение долгосрочных отношений при поставках импортных электронных компонентов на взаимовыгодных условиях!

Наши преимущества:

- Оперативные поставки широкого спектра электронных компонентов отечественного и импортного производства напрямую от производителей и с крупнейших мировых складов;
- Поставка более 17-ти миллионов наименований электронных компонентов;
- Поставка сложных, дефицитных, либо снятых с производства позиций;
- Оперативные сроки поставки под заказ (от 5 рабочих дней);
- Экспресс доставка в любую точку России;
- Техническая поддержка проекта, помощь в подборе аналогов, поставка прототипов;
- Система менеджмента качества сертифицирована по Международному стандарту ISO 9001;
- Лицензия ФСБ на осуществление работ с использованием сведений, составляющих государственную тайну;
- Поставка специализированных компонентов (Xilinx, Altera, Analog Devices, Intersil, Interpoint, Microsemi, Aeroflex, Peregrine, Syfer, Eurofarad, Texas Instrument, Miteq, Cobham, E2V, MA-COM, Hittite, Mini-Circuits,General Dynamics и др.);

Помимо этого, одним из направлений компании «ЭлектроПласт» является направление «Источники питания». Мы предлагаем Вам помощь Конструкторского отдела:

- Подбор оптимального решения, техническое обоснование при выборе компонента;
- Подбор аналогов;
- Консультации по применению компонента;
- Поставка образцов и прототипов;
- Техническая поддержка проекта;
- Защита от снятия компонента с производства.

Как с нами связаться

Телефон: 8 (812) 309 58 32 (многоканальный)
Факс: 8 (812) 320-02-42
Электронная почта: org@eplast1.ru
Адрес: 198099, г. Санкт-Петербург, ул. Калинина, дом 2, корпус 4, литера А.