3M™ HDC Header

.100” Vertical Mount, PCB/Backplane, Solder Tail or Press-Fit HDC Series

- High density, up to 240 contacts single bay and 366 contacts dual bay
- Early Mate Late Break (EMLB) grounding contacts for hot swapping
- Mates with three-row and four-row sockets
- See Regulatory Information Appendix (RIA) for chemical compliance information

Date Modified: March 25, 2008

Physical

Insulation:

Material: Glass Filled Thermoplastic (LCP)

Flammability: UL 94V-0

Color: Black

Contact:

Material: Copper Alloy

Plating:

Underplating: 50 µ” [1.27 µm] min. Nickel

Wiping Area: See Ordering Information

Termination Area: See Ordering Information

Marking: Part Number and Date Code

Electrical

Current Rating: 3.0 A

Insulation Resistance: 1 x 10^3 M Ω min. at 500 V_{DC}

Withstanding Voltage: 900 V_{AC} for 1 minute

Environmental

Temperature Rating: -55°C to +105°C

Process Rating: Maximum 260°C (per J-STD-020C)

Moisture Sensitivity Level: 1 (per J-STD-020C)

UL File No.: E68080

3M is a trademark of 3M Company.

3M™ HDC Header

.100" Vertical Mount, PCB/Backplane, Solder Tail or Press-Fit

HDC Series

3-Row Single Bay

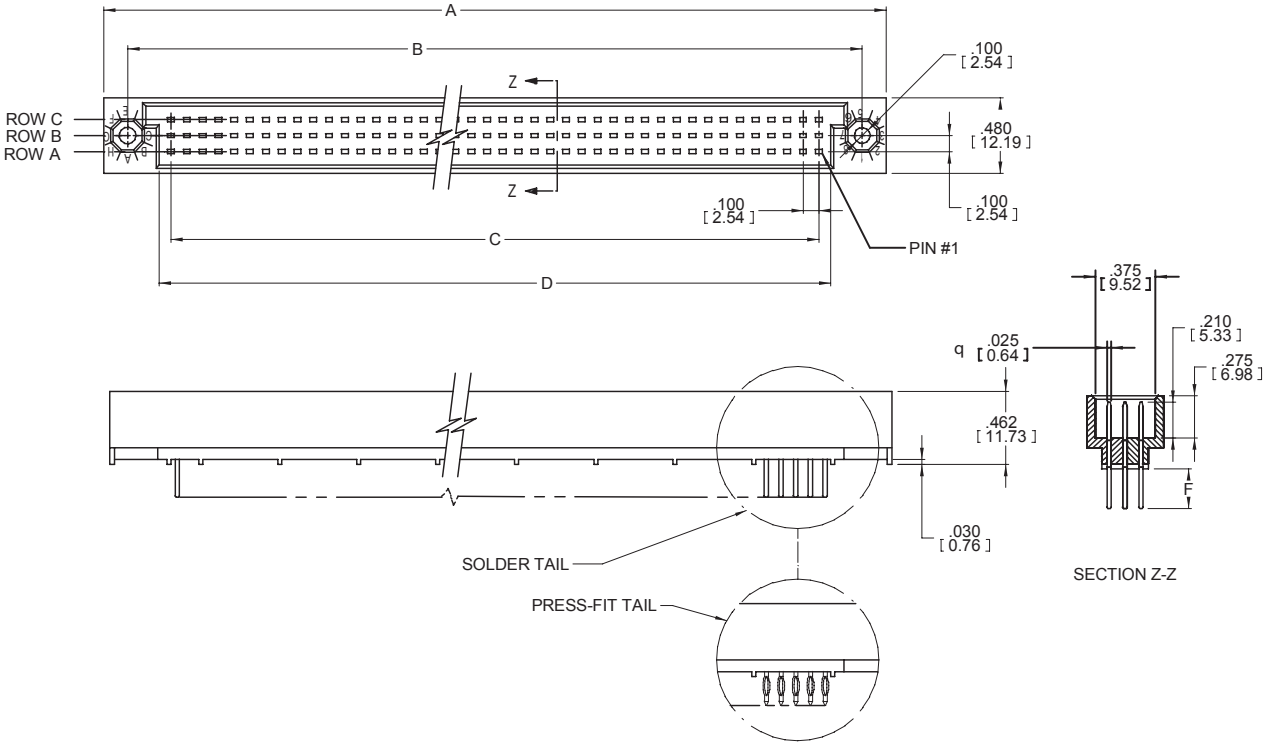

Inch
[mm]

Tolerance Unless Noted			
	.0	.00	.000
inch	±.1	±.01	±.005

[ ] Dimensions for Reference Only

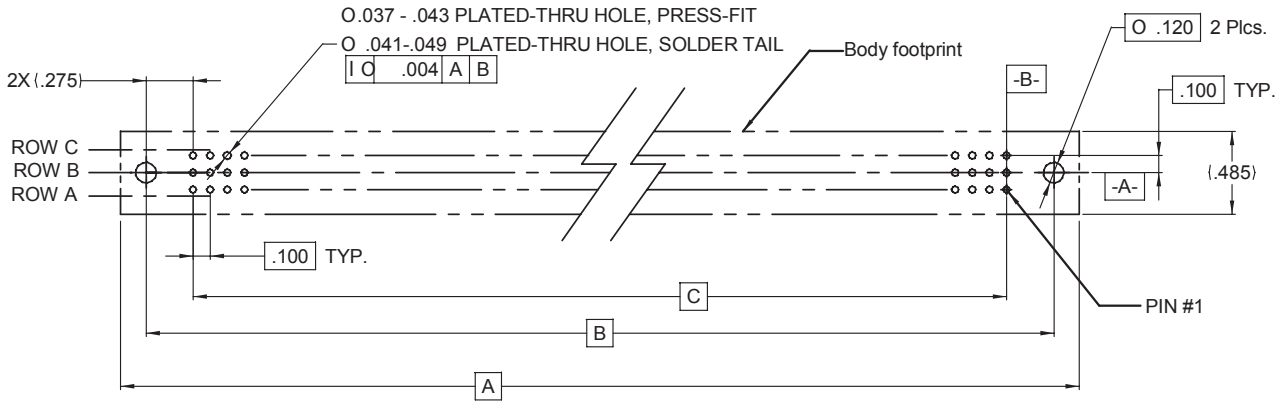

RECOMMENDED P.C.B. HOLE PATTERN

TS-1136-C
Sheet 2 of 7

3M™ HDC Header

.100" Vertical Mount, PCB/Backplane, Solder Tail or Press-Fit

HDC Series

Product Table/Dimensions for 3 Row, Single Bay

Description	Pin Quantity	A	B	C	D
HDC-H045-31XX-XXXX	45	2.250 [57.15]	1.950 [49.53]	1.400 [35.56]	1.550 [39.37]
HDC-H072-31XX-XXXX	72	3.150 [80.01]	2.850 [72.39]	2.300 [58.42]	2.300 [62.23]
HDC-H075-31XX-XXXX	75	3.250 [82.55]	2.950 [74.93]	2.400 [60.96]	2.550 [64.77]
HDC-H090-31XX-XXXX	90	3.750 [95.25]	3.450 [87.63]	2.900 [73.66]	3.050 [77.47]
HDC-H096-31XX-XXXX	96	3.950 [100.33]	3.650 [92.71]	3.100 [78.74]	3.250 [82.55]
HDC-H102-31XX-XXXX	102	4.150 [105.41]	3.850 [97.79]	3.300 [83.82]	3.450 [87.63]
HDC-H120-31XX-XXXX	120	4.750 [120.65]	4.450 [113.03]	3.900 [113.03]	4.050 [102.87]
HDC-H135-31XX-XXXX	135	5.250 [133.35]	4.950 [125.73]	4.400 [111.76]	4.550 [115.57]
HDC-H150-31XX-XXXX	150	5.750 [146.05]	5.450 [138.43]	4.900 [124.46]	5.050 [128.27]
HDC-H165-31XX-XXXX	165	6.250 [158.75]	5.950 [151.13]	5.400 [137.16]	5.550 [140.97]
HDC-H180-31XX-XXXX	180	6.750 [171.45]	6.450 [163.83]	5.900 [149.86]	6.050 [153.67]
HDC-H195-31XX-XXXX	195	7.250 [184.15]	6.950 [176.53]	6.400 [162.56]	6.550 [166.37]
HDC-H210-31XX-XXXX	210	7.750 [196.85]	7.450 [189.23]	6.900 [175.26]	7.050 [179.07]
HDC-H225-31XX-XXXX	225	8.250 [209.55]	7.950 [201.93]	7.400 [187.96]	7.550 [191.77]
HDC-H228-31XX-XXXX	228	8.350 [212.09]	8.050 [204.47]	7.500 [190.50]	7.650 [194.31]
HDC-H240-31XX-XXXX	240	8.750 [222.25]	8.450 [214.63]	7.900 [200.66]	8.050 [204.47]

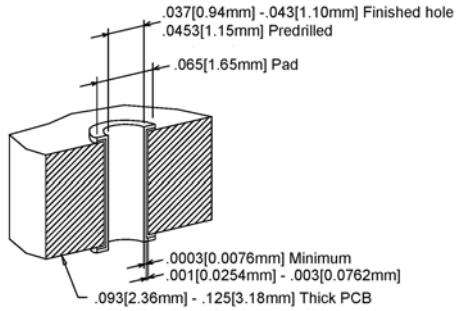

PCB HOLE SPECIFICATION FOR COMPLIANT PIN INSTALLATION

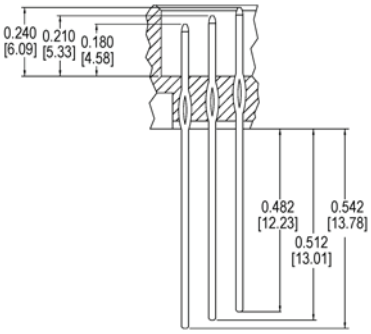

EXAMPLE "EMLB"

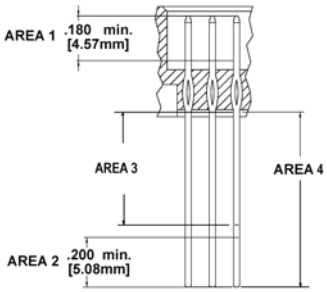

Plating Description

Ordering Information

HDC - HXXX - XXXX - XXXX

Pin Quantity: See Table

Row Options
3 = 3 Rows
4 = 4 Rows

Insulator Options
1 = Single bay insulator
2 = Dual bay insulator

Termination Style / Lead length - Dim. F
P1 - Press-fit / 0.200″ (5.08)
P2 - Press-fit / 0.533″ (13.54)
S1 - Solder Tail / 0.190″ (4.83)

Plating Options: (See Plating Chart)

Plating Chart (S1 & P1 Termination Styles ONLY)

Plating Suffix	Press-Fit Terminations	Solder Tail Terminations	Plating composition
TR	(RIA E2 & C2 apply)	(RIA E3 & C2 apply)	3 µ" [0.08 µm] Min. Au over 7 µ" [0.18 µm] PdNi area 1 100 µ" [2.54 µm] Min. Tin Lead area 4 50 µ" [1.27 µm] Min. Ni all over
TG30	(RIA E2 & C2 apply)	(RIA E3 & C2 apply)	30 µ" [0.76 µm] Min. Au Area 1 100 µ" [2.54 µm] Min. Tin Lead Tail Area 4 50 µ" [1.27 µm] Min. Ni all over
HM	(RIA E1 & C1 apply)	(RIA E1 & C1 apply)	3 µ" [0.08 µm] Min Au on Area 1 7 µ" [0.18 µm] PdNi on area 1 100 µ" [2.54 µm] Min. Whisker Mitigating Matte Tin on Area 4 50 µ" [1.27 µm] Min. Ni all over
KR	(RIA E1 & C1 apply)	(RIA E1 & C1 apply)	30 µ" [0.76 µm] Min. Au on Area 1 100 µ" [5.08 µm] Min. Whisker Mitigating Matte Tin on Area 4 50 µ" [1.27 µm] Min. Ni all over

Plating Chart (P2 Termination Styles ONLY)

Plating Suffix	Press-Fit Terminations	Solder Tail Terminations	Plating composition
GG30	(RIA E2 & C2 apply)	(RIA E3 & C2 apply)	30 µ" [0.76 µm] Min. Au on area 1 10 µ" [0.25 µm] Min. Au on area 2 100 µ" [2.54 µm] Min Tin Lead on area 3 50 µ" [1.27 µm] Ni all over
RR	(RIA E2 & C2 apply)	(RIA E3 & C2 apply)	30 µ" [0.76 µm] Min. Au on area 1 10 µ" [0.25 µm] Min. Au on area 2 100 µ" [2.54 µm] Min Tin Lead on area 3 50 µ" [1.27 µm] Ni all over

TS-1136-C
Sheet 3 of 7

3M is a trademark of 3M Company.

For technical, sales or ordering information call
800-225-5373

3M™ HDC Header

.100" Vertical Mount, PCB/Backplane, Solder Tail or Press-Fit

HDC Series

Inch
[mm]

Tolerance Unless Noted			
	.0	.00	.000
Inch	±.1	±.01	±.005

[ ] Dimensions for Reference only

Product Table/Dimensions for 3 Row, Dual Bay						
Description	Pin Quantity	A	B	C	D	E
HDC-H228-32XX-XXXX	228	8.650 [219.71]	8.350 [212.09]	7.800 [198.12]	7.950 [201.93]	3.700 [93.98]
HDC-H240-32XX-XXXX	240	9.050 [229.87]	8.750 [222.25]	8.200 [208.28]	8.350 [212.09]	3.900 [99.06]
HDC-H258-32XX-XXXX	258	9.650 [245.11]	9.350 [237.49]	8.800 [223.52]	8.950 [227.33]	4.200 [106.68]
HDC-H276-32XX-XXXX	276	10.250 [260.35]	9.950 [252.73]	9.400 [238.76]	9.550 [242.57]	4.500 [114.30]
HDC-H294-32XX-XXXX	294	10.850 [275.59]	10.550 [267.97]	10.000 [254.00]	10.150 [257.81]	4.800 [121.92
HDC-H312-32XX-XXXX	312	11.450 [290.83]	11.150 [283.21]	10.600 [269.24]	10.750 [273.05]	5.100 [129.54]
HDC-H330-32XX-XXXX	330	12.050 [306.07]	11.750 [298.45]	11.200 [284.48]	11.350 [288.29]	5.400 [137.16]
HDC-H348-32XX-XXXX	348	12.650 [321.31]	12.350 [313.69]	11.800 [299.72]	11.950 [303.53]	5.700 [144.78]
HDC-H366-32XX-XXXX	366	13.250 [336.55]	12.950 [328.93]	12.400 [314.96]	12.550 [318.77]	6.000 [152.40]

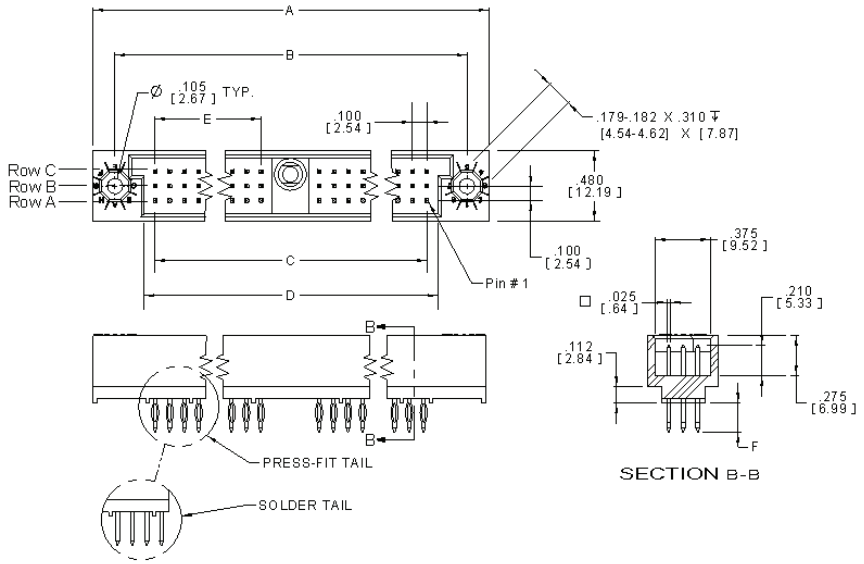

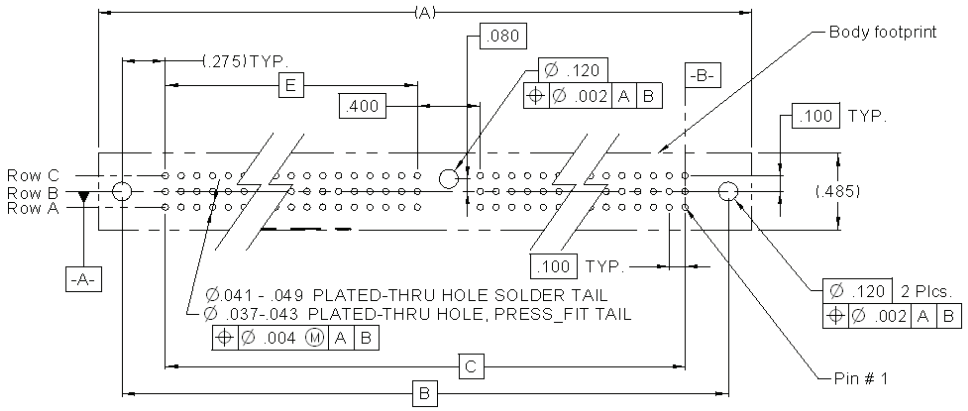

Recommended PCB hole mounting pattern

TS-1136-C
Sheet 4 of 7

4-Row Single Bay

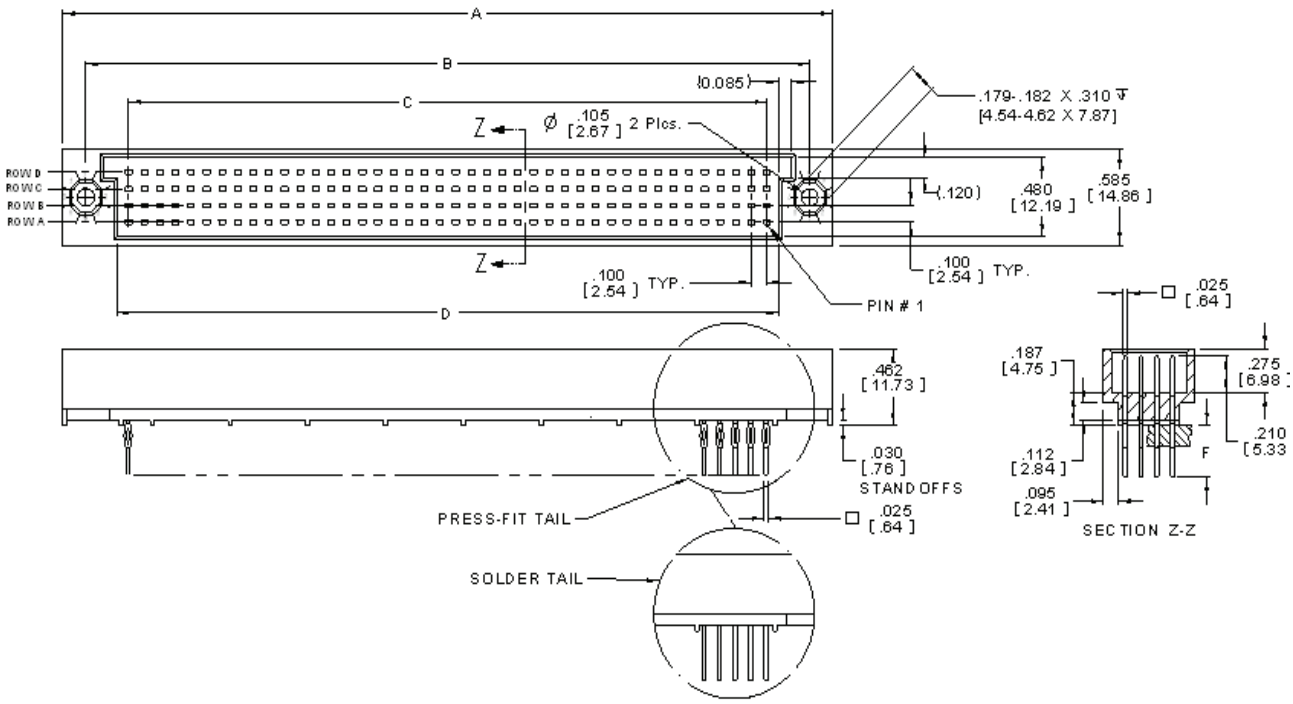

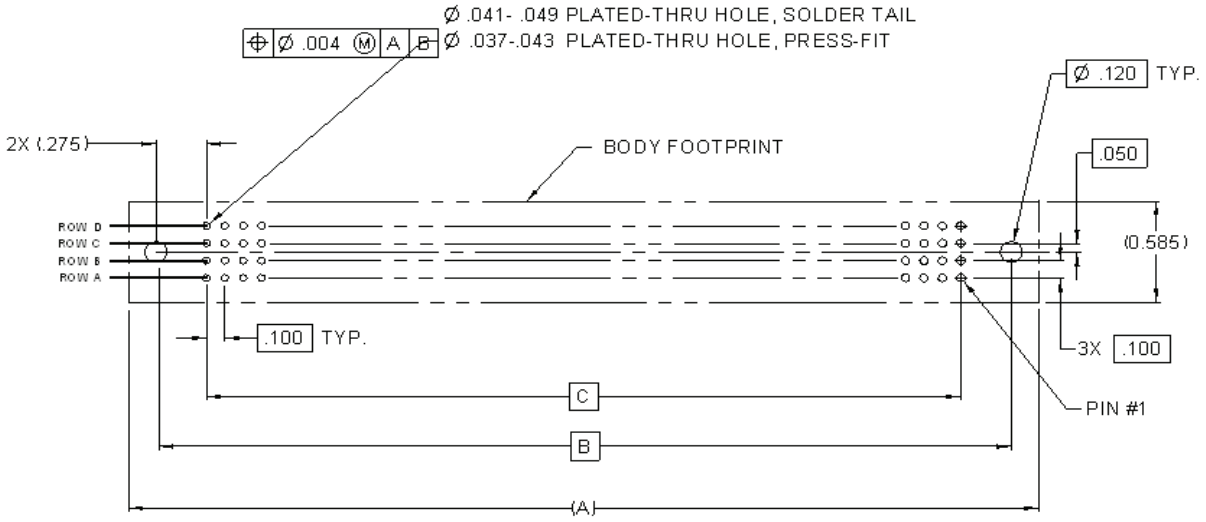

RECOMMENDED P.C.B. HOLE PATTERN

TS-1136-C
Sheet 5 of 7

Product Table/Dimensions for 4-Row, Single Bay					
Description	Pin Quantity	A	B	C	D
HDC-H060-41XX-XXXX	60	2.250 [57.15]	1.950 [49.53]	1.400 [49.53]	1.550 [39.37]
HDC-H076-41XX-XXXX	76	2.650 [67.31]	2.350 [59.69]	1.800 [45.72]	1.950 [49.53]
HDC-H080-41XX-XXXX	80	2.750 [69.85]	2.450 [62.23]	1.900 [48.26]	1.900 [52.07]
HDC-H100-41XX-XXXX	100	3.250 [82.55]	2.950 [74.93]	2.400 [60.96]	2.550 [60.96]
HDC-H120-41XX-XXXX	120	3.750 [95.25]	3.450 [87.63]	2.900 [73.66]	3.050 [87.63]
HDC-H128-41XX-XXXX	128	3.950 [100.33]	3.650 [92.71]	3.100 [78.74]	3.250 [82.55]
HDC-H140-41XX-XXXX	140	4.250 [107.95]	3.950 [100.33]	3.400 [86.36]	3.550 [90.17]
HDC-H160-41XX-XXXX	160	4.750 [120.65]	4.450 [113.03]	3.900 [99.06]	4.050 [102.87]
HDC-H168-41XX-XXXX	168	4.950 [125.73]	4.650 [118.11]	4.100 [104.14]	4.250 [107.95]
HDC-H180-41XX-XXXX	180	5.250 [133.35]	4.950 [125.73]	4.400 [111.76]	4.550 [115.57]
HDC-H200-41XX-XXXX	200	5.750 [146.05]	5.450 [138.43]	4.900 [124.46]	5.050 [128.27]
HDC-H216-41XX-XXXX	216	6.150 [156.21]	5.850 [148.59]	5.300 [134.62]	5.450 [138.43]
HDC-H220-41XX-XXXX	220	6.250 [158.75]	5.950 [151.13]	5.400 [137.16]	5.550 [140.97]
HDC-H240-41XX-XXXX	240	6.750 [171.45]	6.450 [163.83]	5.900 [149.86]	6.050 [149.86]
HDC-H260-41XX-XXXX	260	7.250 [184.15]	6.950 [176.53]	6.400 [162.56]	6.550 [166.37]
HDC-H280-41XX-XXXX	280	7.750 [196.85]	7.450 [189.23]	6.900 [175.26]	7.050 [179.07]
HDC-H300-41XX-XXXX	300	8.250 [209.55]	7.950 [209.55]	7.400 [187.96]	7.550 [191.77]
HDC-H320-41XX-XXXX	320	8.750 [222.25]	8.450 [214.63]	7.900 [200.66]	8.050 [204.47]

Product Table/Dimensions for 4-Row, Dual Bay						
Description	Pin Quantity	A	B	C	D	E
HDC-H320-42XX-XXXX	320	9.050 [229.87]	8.750 [222.25]	8.200 [208.28]	8.350 [212.09]	3.900 [99.06]
HDC-H344-42XX-XXXX	344	9.650 [245.11]	9.350 [237.49]	8.800 [237.49]	8.950 [237.49]	4.200 [106.68]
HDC-H352-42XX-XXXX	352	9.850 [250.19]	9.550 [242.57]	9.000 [228.60]	9.150 [232.41]	4.300 [109.22]
HDC-H360-42XX-XXXX	360	10.050 [255.27]	9.750 [247.65]	9.200 [233.68]	9.350 [237.49]	4.400 [111.76]
HDC-H368-42XX-XXXX	368	10.250 [260.35]	9.950 [252.73]	9.400 [238.76]	9.550 [242.57]	4.500 [114.30]
HDC-H392-42XX-XXXX	392	10.850 [275.59]	10.550 [267.97]	10.000 [254.00]	10.150 [257.81]	4.800 [121.92]
HDC-H416-42XX-XXXX	416	11.450 [290.83]	11.150 [283.21]	10.600 [269.24]	10.750 [273.05]	5.100 [129.54]
HDC-H440-42XX-XXXX	440	12.050 [306.07]	11.750 [298.45]	11.200 [284.48]	11.350 [288.29]	5.400 [137.16]
HDC-H464-42XX-XXXX	464	12.650 [321.31]	12.350 [313.69]	11.800 [299.72]	11.950 [303.53]	5.700 [144.78]
HDC-H488-42XX-XXXX	488	13.250 [336.55]	12.950 [328.93]	12.400 [314.96]	12.550 [318.77]	6.000 [152.40]

3M

Electronic Solutions Division
Interconnect Solutions
http://www.3M.com/interconnects/

3M is a trademark of 3M Company.

For technical, sales or ordering information call
800-225-5373

4-Row Dual Bay

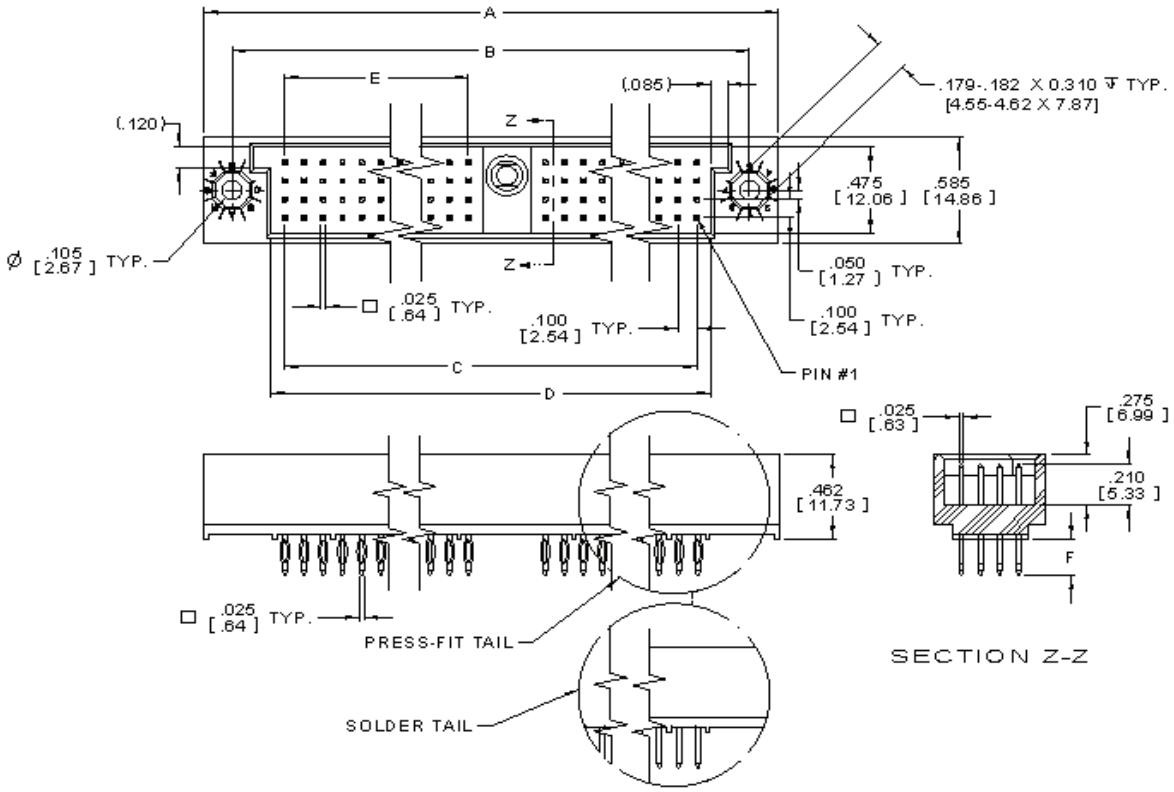

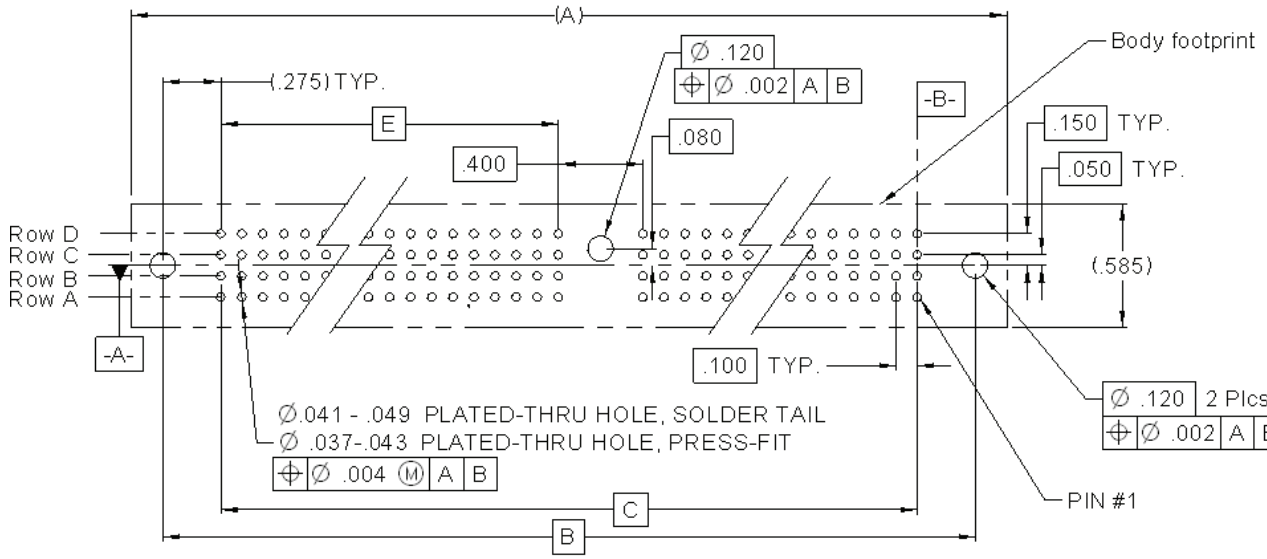

Recommended PCB hole mounting pattern

TS-1136-C
Sheet 7 of 7

Regulatory Information Appendix

3M Electronic Solutions Division/Interconnect

EUROPE

Appendix E1: European Union RoHS

Directive 2002/95/EC, Restriction of the Use of Certain Hazardous Substances in Electrical & Electronic Equipment, as amended by EU Commission Decision 2005/618/EC.
This product is RoHS Compliant 2005/95/EC.
"RoHS Compliant 2005/95/EC" means that the product or part ("Product") does not contain any of the substances in excess of the maximum concentration values in EU Directive 2002/95/EC, as amended by Commission Decision 2005/618/EC, unless the substance is in an application that is exempt under EU RoHS. Unless otherwise stated by 3M in writing, this information represents 3M's best knowledge and belief based upon information provided by third party suppliers to 3M.

In the event any product is proven not to conform with 3M's Regulatory Information Appendix, then 3M's entire liability and Buyer's exclusive remedy will be in accordance with the Warranty stated below.

Appendix E2: European Union RoHS

Directive 2002/95/EC, Restriction of the Use of Certain Hazardous Substances in Electrical & Electronic Equipment, as amended by EU Commission Decision 2005/618/EC.
This product contains lead in the compliant pin area in excess of the maximum concentration value allowed but is compliant by exemption under EU Commission Decision 2005/747/EC.
"RoHS Compliant 2005/95/EC" means that the product or part ("Product") does not contain any of the substances in excess of the maximum concentration values in EU Directive 2002/95/EC, as amended by Commission Decision 2005/618/EC, unless the substance is in an application that is exempt under EU RoHS. Unless otherwise stated by 3M in writing, this information represents 3M's best knowledge and belief based upon information provided by third party suppliers to 3M.

In the event any product is proven not to conform with 3M's Regulatory Information Appendix, then 3M's entire liability and Buyer's exclusive remedy will be in accordance with the Warranty stated below.

Appendix E3: European Union RoHS

Directive 2002/95/EC, Restriction of the Use of Certain Hazardous Substances in Electrical & Electronic Equipment as amended by Commission Decision 2005/618/EC.
This product contains lead in the solder tail area in excess of the maximum concentration value allowed.
Unless otherwise stated by 3M in writing, this information represents 3M's best knowledge and belief based upon information provided by third party suppliers to 3M.

In the event any product is proven not to conform with 3M's Regulatory Information Appendix, then 3M's entire liability and Buyer's exclusive remedy will be in accordance with the Warranty stated below.

Appendix E4: European Union RoHS

Directive 2002/95/EC, Restriction of the Use of Certain Hazardous Substances in Electrical & Electronic Equipment, as amended by EU Commission Decision 2005/618/EC.
This product contains decaBDE in the insulating material in excess of the maximum concentration value allowed but is compliant by exemption under EU Commission Decision 2005/717/EC.
"RoHS Compliant 2005/95/EC" means that the product or part ("Product") does not contain any of the substances in excess of the maximum concentration values in EU Directive 2002/95/EC, as amended by Commission Decision 2005/618/EC, unless the substance is in an application that is exempt under EU RoHS. Unless otherwise stated by 3M in writing, this information represents 3M's best knowledge and belief based upon information provided by third party suppliers to 3M.

In the event any product is proven not to conform with 3M's Regulatory Information Appendix, then 3M's entire liability and Buyer's exclusive remedy will be in accordance with the Warranty stated below.product Warranty stated below.

Appendix E5: European Union RoHS

Directive 2002/95/EC, Restriction of the Use of Certain Hazardous Substances in Electrical and Electronic Equipment, as amended by EU Commission Decision 2005/618/EC.

This product contains lead in excess of the maximum concentration value allowed but is compliant by exemption under Item 6 of the Annex to the Directive.

"RoHS Compliant 2005/95/EC" means that the product or part ("Product") does not contain any of the substances in excess of the maximum concentration values in EU Directive 2002/95/EC, as amended by Commission Decision 2005/618/EC, unless the substance is in an application that is exempt under EU RoHS. Unless otherwise stated by 3M in writing, this information represents 3M's best knowledge and belief based upon information provided by third party suppliers to 3M.

In the event any product is proven not to conform with 3M's Regulatory Information Appendix, then 3M's entire liability and Buyer's exclusive remedy will be in accordance with the Warranty stated below.

CHINA

Appendix C1: China RoHS

Electronic Industry Standard of the People's Republic of China, SJ/T11363-2006, Requirements for Concentration Limits for Certain Hazardous Substances in Electronic Information Products.
This symbol, per Marking for the Control of Pollution Caused by Electronic Information Products, SJ/T11364-2006, means that the product or part **does not** contain any of the following substances in excess of the following maximum concentration values in any homogeneous material: (a) 0.1% (by weight) for lead, mercury, hexavalent chromium, polybrominated biphenyls or polybrominated diphenyl ethers; or (b) 0.01% (by weight) for cadmium. Unless otherwise stated by 3M in writing, this information represents 3M's best knowledge and belief based upon information provided by third party suppliers to 3M.

In the event any product is proven not to conform with 3M's Regulatory Information Appendix, then 3M's entire liability and Buyer's exclusive remedy will be in accordance with the Warranty stated below.

Appendix C2: China RoHS

Electronic Industry Standard of the People's Republic of China, SJ/T11363-2006, Requirements for Concentration Limits for Certain Hazardous Substances in Electronic Information Products.
This symbol, per Marking for the Control of Pollution Caused by Electronic Information Products, SJ/T11364-2006, means that the product or part **does** contain a substance, as detailed in the chart below, in excess of the following maximum concentration values in any homogeneous material: (a) 0.1% (by weight) for lead, mercury, hexavalent chromium, polybrominated biphenyls or polybrominated diphenyl ethers; or (b) 0.01% (by weight) for cadmium. Unless otherwise stated by 3M in writing, this information represents 3M's best knowledge and belief based upon information provided by third party suppliers to 3M.

The numerical reference in the symbol above should not be construed as a representation regarding the product's life or an extension of a product warranty. The product warranty is stated below. In the event any product is proven not to conform with 3M's Regulatory Information Appendix, then 3M's entire liability and Buyer's exclusive remedy will be in accordance with the product Warranty stated below.

产品中有毒有害物质或元素的名称及含量 Name and Content of Hazardous Substances or Elements

部件名称 (Part or Component Name)	有毒有害物质或元素 (Hazardous Substances or Elements)					
	铅(Pb)	汞 (Hg)	镉 (Cd)	六价铬 (Cr(VI))	多溴联苯 (PBB)	多溴二苯醚 (PBDE)
端子镀层(contact plating)	×	○	○	○	○	○

○：表示该有毒有害物质在该部件所有均质材料中的含量均在SJ/T11363-2006 标准规定的限量要求以下。(Indicates that this hazardous substance contained in all of the homogeneous materials for this part is below the limit requirement in SJ/T11363-2006.)
×：表示该有毒有害物质至少在该部件的某一均质材料中的含量超出SJ/T11363-2006 标准规定的限量要求。(Indicates that this hazardous substance contained in at least one of the homogeneous materials used for this part is above the limit requirement in SJ/T11363-2006.)

Appendix C3: China RoHS

Electronic Industry Standard of the People's Republic of China, SJ/T11363-2006, Requirements for Concentration Limits for Certain Hazardous Substances in Electronic Information Products.

This symbol, per Marking for the Control of Pollution Caused by Electronic Information Products, SJ/T11364-2006, means that the product or part **does** contain a substance, as detailed in the chart below, in excess of the following maximum concentration values in any homogeneous material: (a) 0.1% (by weight) for lead, mercury, hexavalent chromium, polybrominated biphenyls or polybrominated diphenyl ethers; or (b) 0.01% (by weight) for cadmium. Unless otherwise stated by 3M in writing, this information represents 3M's best knowledge and belief based upon information provided by third party suppliers to 3M.

The numerical reference in the symbol above should not be construed as a representation regarding the product's life or an extension of a product warranty. The product warranty is stated below. In the event any product is proven not to conform with 3M's Regulatory Information Appendix, then 3M's entire liability and Buyer's exclusive remedy will be in accordance with the product Warranty stated below.

产品中有毒有害物质或元素的名称及含量 Name and Content of Hazardous Substances or Elements

部件名称 (Part or Component Name)	有毒有害物质或元素 (Hazardous Substances or Elements)					
	铅(Pb)	汞 (Hg)	镉 (Cd)	六价铬 (Cr(VI))	多溴联苯 (PBB)	多溴二苯醚 (PBDE)
合金(Metal alloy)	×	○	○	○	○	○

○：表示该有毒有害物质在该部件所有均质材料中的含量均在SJ/T11363-2006 标准规定的限量要求以下。(Indicates that this hazardous substance contained in all of the homogeneous materials for this part is below the limit requirement in SJ/T11363-2006.)
×：表示该有毒有害物质至少在该部件的某一均质材料中的含量超出SJ/T11363-2006 标准规定的限量要求。(Indicates that this hazardous substance contained in at least one of the homogeneous materials used for this part is above the limit requirement in SJ/T11363-2006.)

Important Notice

All statements, technical information, and recommendations related to 3M's products are based on information believed to be reliable, but the accuracy or completeness is not guaranteed. Before using this product, you must evaluate it and determine if it is suitable for your intended application. You assume all risks and liability associated with such use. Any statements related to the product which are not contained in 3M's current publications, or any contrary statements contained on your purchase order shall have no force or effect unless expressly agreed upon, in writing, by an authorized officer of 3M.

Warranty; Limited Remedy; Limited Liability.

This product will be free from defects in material and manufacture for a period of 90 days from the time of purchase. **3M MAKES NO OTHER WARRANTIES INCLUDING, BUT NOT LIMITED TO, ANY IMPLIED WARRANTY OF MERCHANTABILITY OR FITNESS FOR A PARTICULAR PURPOSE.** If this product is defective within the warranty period stated above, your exclusive remedy shall be, at 3M's option, to replace or repair the 3M product or refund the purchase price of the 3M product. **Except where prohibited by law, 3M will not be liable for any indirect, special, incidental or consequential loss or damage arising from this 3M product, regardless of the legal theory asserted.**

3M Electronic Solutions Division
6801 River Place Blvd.
Austin, TX 78726-9000
U.S.A.
1-800-225-5373
www.3m.com/interconnects

Please recycle. Printed in USA.
© 3M 2008. All rights reserved.
RIA-2217A-D

3M is a trademark of 3M Company.

Компания «ЭлектроПласт» предлагает заключение долгосрочных отношений при поставках импортных электронных компонентов на взаимовыгодных условиях!

Наши преимущества:

- Оперативные поставки широкого спектра электронных компонентов отечественного и импортного производства напрямую от производителей и с крупнейших мировых складов;
- Поставка более 17-ти миллионов наименований электронных компонентов;
- Поставка сложных, дефицитных, либо снятых с производства позиций;
- Оперативные сроки поставки под заказ (от 5 рабочих дней);
- Экспресс доставка в любую точку России;
- Техническая поддержка проекта, помощь в подборе аналогов, поставка прототипов;
- Система менеджмента качества сертифицирована по Международному стандарту ISO 9001;
- Лицензия ФСБ на осуществление работ с использованием сведений, составляющих государственную тайну;
- Поставка специализированных компонентов (Xilinx, Altera, Analog Devices, Intersil, Interpoint, Microsemi, Aeroflex, Peregrine, Syfer, Eurofarad, Texas Instrument, Miteq, Cobham, E2V, MA-COM, Hittite, Mini-Circuits,General Dynamics и др.);

Помимо этого, одним из направлений компании «ЭлектроПласт» является направление «Источники питания». Мы предлагаем Вам помощь Конструкторского отдела:

- Подбор оптимального решения, техническое обоснование при выборе компонента;
- Подбор аналогов;
- Консультации по применению компонента;
- Поставка образцов и прототипов;
- Техническая поддержка проекта;
- Защита от снятия компонента с производства.

Как с нами связаться

Телефон: 8 (812) 309 58 32 (многоканальный)
Факс: 8 (812) 320-02-42
Электронная почта: org@eplast1.ru
Адрес: 198099, г. Санкт-Петербург, ул. Калинина, дом 2, корпус 4, литера А.