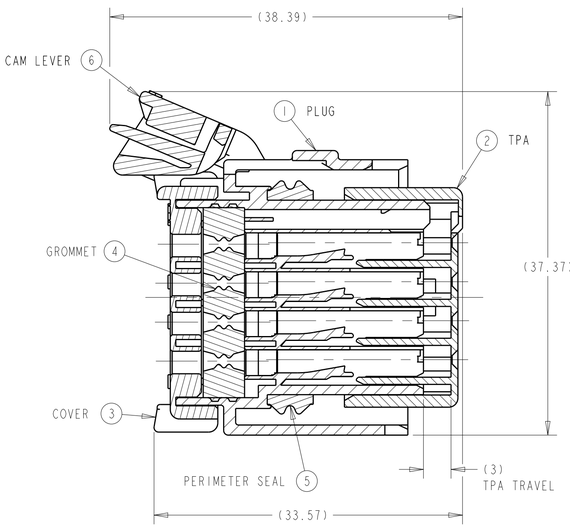
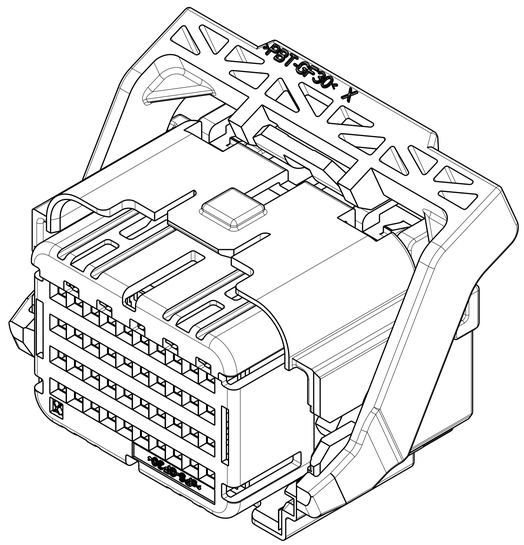
THIS DRAWING IS UNPUBLISHED. RELEASED FOR PUBLICATION 20
© COPYRIGHT 20 BY - ALL RIGHTS RESERVED.

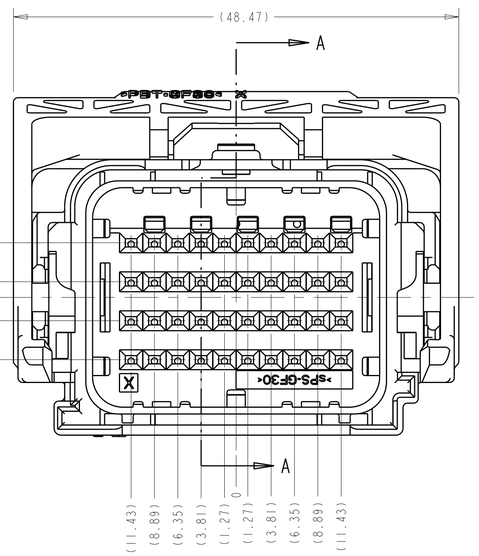
REVISIONS

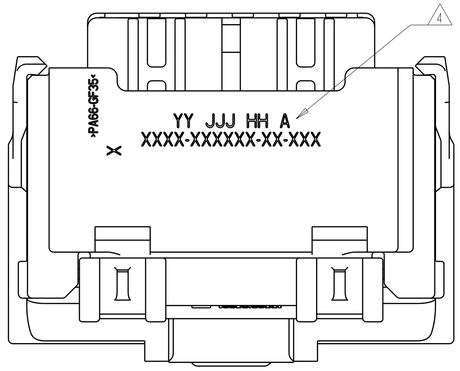
P	LTR	DESCRIPTION	DATE	DWN	APVD
	CB	REVISED PER ECO-13-012231	29JUL2013	DLD	WTW
	CC	REVISED PER ECO-14-005842	14MAY2014	DLD	WTW
	CD	REVISED PER ECO-14-017635	21NOV2014	DLD	WTW

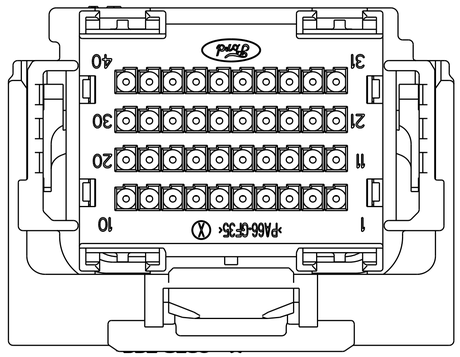


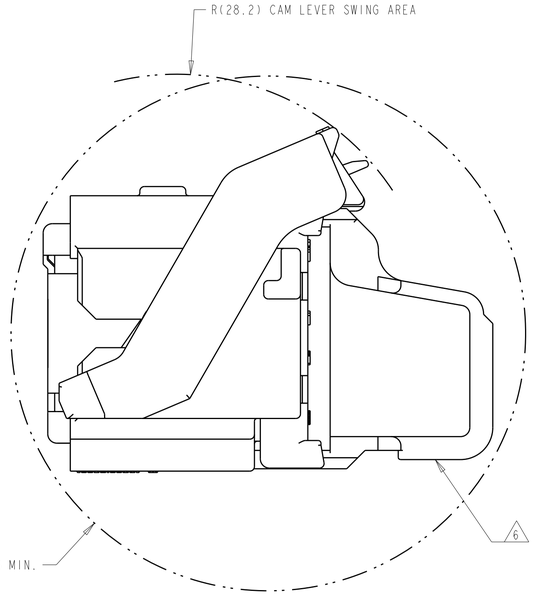
SECTION A-A
SHOWN WITH CAM LEVER
AND TPA IN THEIR
PRE-LOADED POSITIONS
(DELIVERY CONDITION)



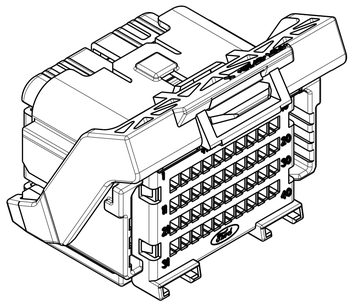




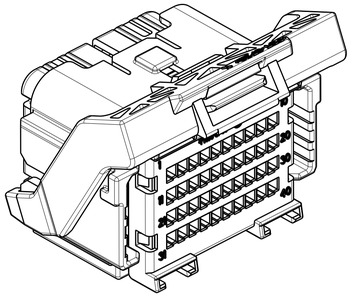




MINIMUM FEED THROUGH CONDITION
WITH 1mm CLEARANCE ALL AROUND
SHOWN WITH OPTION WIRESHIELD
TPA IS IN IT'S LOADED POSITION
CAM LEVER IS IN IT'S PRE-LOADED POSITION

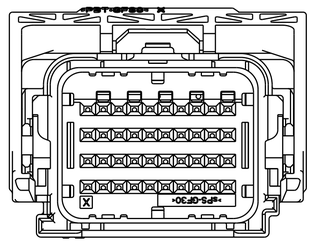


SCALE 2:1

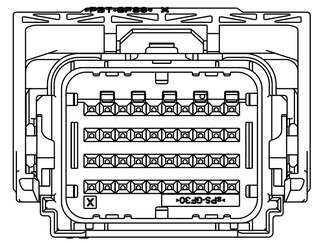


THIS VIEW SHOWS THE
OPTIONAL CAM LEVER

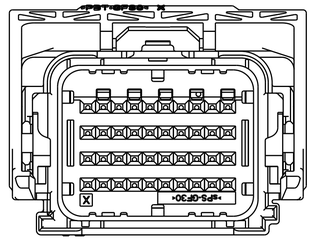
KEYING OPTIONS
SCALE 2:1



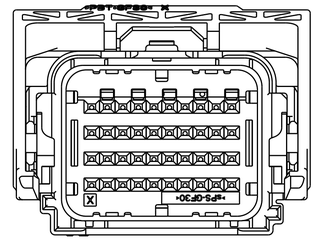
OPTION "G"



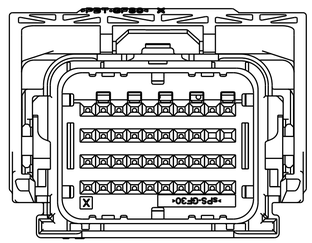
OPTION "H"



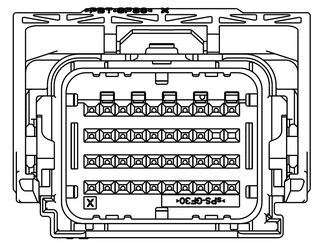
OPTION "J"



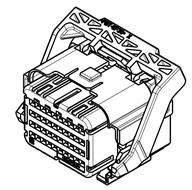
OPTION "K"



OPTION "L"



OPTION "M"



SCALE 1:1

1. APPLICABLE TERMINAL PART NUMBERS (SOLD SEPARATELY):
   FOR TIN APPLICATIONS: 1393367 AND 1393366.
   FOR GOLD APPLICATIONS: 1393365 AND 1393364.
   FOR TERMINATION AND REELING OPTIONS
   SEE DRAWINGS 1393367, 1393366, 1393365, AND 1393364.

2. COMPATIBLE WIRE SIZES FOR MAT SEAL DESIGN 1.19 TO 2.06 O.D.
   (22-18 AWG, 0.35-0.75 mm2)

3. TPA AND CAM LEVER ARE SHIPPED IN THEIR PRE-LOADED POSITION.
   ALL ASSEMBLIES ARE TO BE TRAY PACKAGED.

4. CUSTOMER PART NUMBER AND TRACEABILITY CODE (YY = TWO DIGIT YEAR,
   JJJ = JULIAN DAY, HH = TWO DIGIT MILITARY HOUR, A = ASSEMBLY PROCESS
   USED) ARE PRINTED IN THIS LOCATION.

5. PART ASSEMBLY WEIGHT WITHOUT TERMINALS AND WITH STANDARD PIN-OUT
   CONFIGURATION IS 24.71 GRAMS.

6. OPTIONAL WIRESHIELD P/N 8-1419157-8 (SOLD SEPARATELY). PLEASE CONTACT
   YOUR TE SALES REPRESENTATIVE FOR AVAILABILITY AND PRICING.

KEYING OPTION "G" SHOWN
SEE SHEET 2 FOR BILL OF
MATERIAL AND PIN-OUT CHARTS

THIS DRAWING IS A CONTROLLED DOCUMENT.

DIMENSIONS: mm

TOLERANCES UNLESS OTHERWISE SPECIFIED:
0 PLC ±-
1 PLC ±0.3
2 PLC ±0.10
3 PLC ±-
4 PLC ±-
ANGLES ±3°

MATERIAL: SEE CHART ON SHEET 2
FINISH: -, -

DWN M. FORISKA 19APR2002
CHK M. FORISKA 19APR2002
APVD A. VALASEK 19APR2002
PRODUCT SPEC -
APPLICATION SPEC -
WEIGHT SEE NOTE 5

TE Connectivity

NAME
40 WAY ARM,
PLUG ASSEMBLY WITHOUT SHORTING BARS,
CUSTOMER SPEC.

SIZE	CAGE CODE	DRAWING NO	RESTRICTED TO
A1	00779	C-8-1419157-7	-

CUSTOMER DRAWING | SCALE 3:1 | SHEET 1 OF 5 | REV CD

THIS DRAWING IS UNPUBLISHED. RELEASED FOR PUBLICATION 20
© COPYRIGHT 20 BY - ALL RIGHTS RESERVED.

REVISIONS

P	LTR	DESCRIPTION	DATE	DWN	APVD
	-	SEE SHEET 1	-	-	-

| ASSEMBLY PART NUMBERS | | |

THIS DRAWING IS UNPUBLISHED. RELEASED FOR PUBLICATION 20
© COPYRIGHT 20 BY - ALL RIGHTS RESERVED.

REVISIONS

P	LTR	DESCRIPTION	DATE	DWN	APVD
	-	SEE SHEET 1	-	-	-

ASSEMBLY PART NUMBERS

2138987-2	2138987-1	2098034-1	1-1438435-6	1-1438435-5	1-1438435-4	1-1438435-3	1-1438435-2	1-1438435-1	1-1438435-0	1438435-9	1438435-8	1438435-7	1438435-6	1438435-5	1438435-4	1438435-3	1438435-2	1438435-1	ITEM	DESCRIPTION	MATERIAL	FINISH/COLOR
1	1		1	1	1	1	1	1	1	1	1	1	1	1	1	1	1	1	6	CAM LEVER	PBT 30% GF	GRAY
		1																	6	CAM LEVER WITH MODIFIED TAB	PA66 35% GF	GRAY
																			6	CAM LEVER WITH MODIFIED TAB	PBT 30% GF	GRAY
1	1	1	1	1	1	1	1	1	1	1	1	1	1	1	1	1	1	1	5	PERIMETER SEAL	SILICONE	GREEN
1	1	1	1	1	1	1	1	1	1	1	1	1	1	1	1	1	1	1	4	GROMMET	SILICONE	BROWN
1	1	1	1	1	1	1	1	1	1	1	1	1	1	1	1	1	1	1	3	COVER	PA66 35% GF	BLACK
		1																	2	TPA FOR NON-SHORTING BAR APPLICATIONS	sPS 30% GF	NATURAL
1	1		1	1	1	1	1	1	1	1	1	1	1	1	1	1	1	1	2	TPA FOR NON-SHORTING BAR APPLICATIONS	sPS 30% GF	RED
																		1	1	PLUG WITH KEYING OPTION "K" AND 5 SHORTING BAR POSITIONS CONFIGURATION	PA66 35% GF	BLACK
			1	1	1	1	1	1	1	1	1	1	1	1	1	1	1	1	1	PLUG WITH KEYING OPTION "L" AND 5 SHORTING BAR POSITIONS CONFIGURATION	PA66 35% GF	BLACK
																		1	1	PLUG WITH KEYING OPTION "J" AND 5 SHORTING BAR POSITIONS CONFIGURATION	PA66 35% GF	BLACK
		1																	1	PLUG WITH KEYING OPTION "H" AND 5 SHORTING BAR POSITIONS CONFIGURATION	PA66 35% GF	BLACK
1	1																	1	1	PLUG WITH KEYING OPTION "G" AND 5 SHORTING BAR POSITIONS CONFIGURATION	PA66 35% GF	BLACK
QUANTITY																						

THIS DRAWING IS A CONTROLLED DOCUMENT.

DIMENSIONS: mm

TOLERANCES UNLESS OTHERWISE SPECIFIED:
0 PLC ±-
1 PLC ±0.3
2 PLC ±0.10
3 PLC ±-
4 PLC ±-
ANGLES ±3°

MATERIAL: SEE CHART ON SHEET 2
FINISH: - -

DWN M. FORISKA 19APR2002
CHK M. FORISKA 19APR2002
APVD A. VALASEK 19APR2002
PRODUCT SPEC -
APPLICATION SPEC -
WEIGHT -

TE Connectivity

NAME
40 WAY ARM,
PLUG ASSEMBLY WITHOUT SHORTING BARS,
CUSTOMER SPEC.

SIZE	CAGE CODE	DRAWING NO	RESTRICTED TO
A1	00779	C-8-1419157-7	-

CUSTOMER DRAWING | SCALE 3:1 | SHEET 3 OF 5 | REV CD

THIS DRAWING IS UNPUBLISHED. RELEASED FOR PUBLICATION 20
© COPYRIGHT 20 BY - ALL RIGHTS RESERVED.

PIN-OUT CHART

TERMINAL HOLE POSITION	ASSEMBLY PART NUMBER	PLUG KEYING OPTION
5 6 13 14 15 16 21 22 23 24 32 33 37	4-1438099-4	KEY "J"
1 2 5 6 7 8 11 12 13 14 15 16 19 20 21 22 23 24 26 27 28 29 32 33 37 39 40	4-1438099-3	KEY "J"
5 6 13 14 15 16 21 22 23 24 32 33 37 39 40	4-1438099-2	KEY "J"
1 2 5 6 7 8 11 12 13 14 15 16 19 20 21 22 23 24 26 27 28 29 31 32 33 35 36 37 38 39 40	4-1438099-1	KEY "J"
5 6 13 14 15 16 21 22 23 24 31 32 33 35 36 37 38 39 40	4-1438099-0	KEY "J"
1 2 5 6 7 8 11 12 13 14 15 16 19 20 21 22 23 24 26 27 28 29 31 32 33 35 36 37 38	3-1438099-9	KEY "J"
1 2 3 4 5 6 7 8 11 12 13 14 15 16 19 20 21 22 23 24 26 27 28 29 31 32 33 35 36 37 38	3-1438099-8	KEY "J"
5 6 13 14 15 16 30 31 35 36 37 38	3-1438099-7	KEY "J"
5 6 13 14 15 16 30 31 35 36 37 38 39 40	3-1438099-6	KEY "J"
1 2 3 4 5 6 7 8 11 12 13 14 15 16 19 20 21 22 23 24 26 27 28 29 32 33 34	3-1438099-5	KEY "J"
3 4 5 6 13 14 15 16 32 33 34	3-1438099-4	KEY "J"
5 6 13 14 15 16 21 22 23 24 31 32 33 35 36 37 38	3-1438099-3	KEY "J"
3 4 5 6 13 14 15 16 21 22 23 24 31 32 33 35 36 37 38 39	3-1438099-2	KEY "J"
3 4 5 6 13 14 15 16 31 32 33 34 35 36 38	3-1438099-1	KEY "J"
3 4 5 6 13 14 15 16 31 35 36 37 38	3-1438099-0	KEY "J"
3 4 13 14 31 32 35 36 37 38	2-1438099-9	KEY "J"
3 4 5 6 13 14 15 16 21 22 23 24 31 32 33 35 36 37 38 39 40	2-1438099-8	KEY "J"
3 4 5 6 13 14 15 16 21 22 23 24 31 32 35 36 37 38 39 40	2-1438099-7	KEY "J"
3 4 5 6 13 14 15 16 21 22 23 23 31 32 35 36 37 38 39 40	2-1438099-6	KEY "J"
13 14 25 26 31 39 40	2-1438099-5	KEY "J"
1 2 5 6 7 8 11 12 15 16 17 18 21 22 23 24 25 26 29 30 31 32 33 35 36 37 38 39 40	2-1438099-4	KEY "J"
5 6 7 8 15 16 17 18 23 24 25 26 37 38 39 40	2-1438099-3	KEY "J"
3 4 5 6 11 12 15 16 31 32 35 36 37 38 39 40	2-1438099-2	KEY "J"
3 4 5 6 13 14 15 16 31 32 34 35 36 37 38 39 40	2-1438099-1	KEY "J"
1 2 11 12 25 26 39 40	2-1438099-0	KEY "J"
1 2 5 6 7 8 11 12 15 16 17 18 19 20 21 22 23 24 25 26 29 30 31 32 33 35 36 37 38 39 40	1-1438099-9	KEY "J"
23 24 25 26 31 37 38 39 40	1-1438099-8	KEY "J"
11 12 23 24 25 26 31 37 38 39 40	1-1438099-7	KEY "J"
11 12 25 26 31 39 40	1-1438099-6	KEY "J"
25 26 31 39 40	1-1438099-5	KEY "J"
25 26 29 30 31 39 40	1-1438099-4	KEY "J"
1 2 3 4 5 6 7 8 9 10 11 12 13 14 15 16 17 18 19 20 21 22 23 24 25 30 31 32 33 34 35 36 37 38 39 40	1-1438099-3	KEY "J"
3 4 5 6 13 14 15 16 31 35 36 37 38 39 40	1-1438099-2	KEY "J"
3 4 5 6 11 12 15 16 21 22 23 24 31 32 33 35 36 37 38 39 40	1-1438099-1	KEY "J"
5 6 11 12 13 14 15 16 21 22 23 24 31 32 35 36 37 38 39 40	1-1438099-0	KEY "J"
5 6 15 16 31 32 35 36 37 38 39 40	1438099-9	KEY "J"
5 6 13 14 15 16 21 22 23 24 33	2-1438098-6	KEY "H"
1 2 3 4 5 6 7 8 11 12 13 14 15 16 19 20 22 23 24 26 27 28 29 31 32 33 34 36 37 38 39 40	2-1438098-5	KEY "H"
3 4 5 6 13 14 15 16 22 23 24 31 32 33 34 36 37 38 39 40	2-1438098-4	KEY "H"
3 4 5 6 13 14 15 16 25 30 32 33 35 37 39	2-1438098-3	KEY "H"
1 2 3 4 5 6 7 8 11 12 13 14 15 16 19 20 22 23 24 25 26 27 28 29 30 31 32 33 35 37 39	2-1438098-2	KEY "H"
	1438679-1	KEY "K"
	1438620-1	KEY "L"
	1438619-1	KEY "J"
	1438618-1	KEY "H"
	1438617-1	KEY "G"
3 4 5 6 13 14 15 16 21 22 23 24 31 32 35 36 37 38 39 40	2-1438098-1	KEY "H"
3 4 5 6 13 14 15 16 21 22 23 24 30 31 32 33 35 36 37 38 39 40	2-1438098-0	KEY "H"
3 4 5 6 13 14 15 16 22 23 24 31 32 33 34 35 37 39	1-1438098-9	KEY "H"
3 4 5 6 13 14 15 16 21 22 23 24 33 38	1-1438435-0	KEY "L"
1 2 3 4 5 6 7 8 9 10 11 12 13 14 15 16 17 18 19 20 21 22 23 24 25 26 27 28 29 30 31 32 33 34 35 36 37 38 39 40	1438435-9	KEY "L"
1 2 3 4 5 6 7 8 9 10 11 12 13 14 15 16 17 18 19 20 21 22 23 24 26 27 28 29 30 31 32 33 35 36 37 38 39 40	1438435-8	KEY "L"
1 2 3 4 5 6 11 12 13 14 15 16 21 22 23 24 31 32 33 35 36 37 38 39 40	1438435-7	KEY "L"
1 2 3 4 5 6 11 12 13 14 15 16 21 22 23 24 31 32 35 36 37 38 39 40	1438435-6	KEY "L"
1 2 3 4 5 6 11 12 13 14 15 16 21 22 23 24 30 31 32 33 35 36 37 38 39 40	1438435-5	KEY "L"
3 4 5 6 13 14 15 16 21 22 23 24 31 32 33 35 36 37 38 39 40	1438435-4	KEY "L"
1 2 3 4 5 6 7 8 9 10 11 12 13 14 15 16 17 18 19 20 21 22 23 24 25 30 31 32 33 34 35 36 37 38 39 40	1438435-3	KEY "L"
	1438435-2	KEY "L"
3 4 5 6 13 14 15 16 21 22 23 24 30 31 32 33 35 36 37 38 39 40	1438435-1	KEY "L"
1 2 3 4 5 6 7 8 11 12 13 14 15 16 19 20 22 23 26 27 28 29 30 31 32 33 34 35 37 39	1-1438098-8	KEY "H"
3 4 5 6 13 14 15 16 22 23 31 32 33 34 35 37 39	1-1438098-7	KEY "H"
1 2 3 4 5 6 7 8 11 12 13 14 15 16 19 20 22 23 24 26 27 28 29 31 35 36 37 38 39 40	1-1438098-6	KEY "H"
3 4 5 6 7 8 13 14 15 16 19 20 22 23 24 31 35 36 37 38 39 40	1-1438098-5	KEY "H"
3 4 5 6 13 14 15 16 22 23 24 31 35 36 37 38 39 40	1-1438098-4	KEY "H"
1 2 3 4 5 6 7 8 11 12 13 14 15 16 19 20 22 23 24 26 27 28 29 30 31 32 33 35 36 37 38 39 40	1-1438098-3	KEY "H"
3 4 5 6 13 14 15 16 22 23 24 30 31 32 33 35 36 37 38 39 40	1-1438098-2	KEY "H"
1 2 3 4 5 6 7 8 9 10 11 12 13 14 15 16 17 18 19 20 21 22 23 24 25 26 27 28 29 30 31 32 33 34 35 36 37 38 39 40	1438098-9	KEY "H"
1 2 3 4 5 6 7 8 9 10 11 12 13 14 15 16 21 22 24 33 35 37 39	1438098-7	KEY "J"
1 2 3 4 5 6 7 8 9 10 11 12 13 14 15 16 21 22 24 30 31 32 33 35 36 37 38 39 40	1438098-6	KEY "H"
1 2 3 4 5 6 7 8 11 12 13 14 15 16 19 20 22 23 26 27 28 29 31 32 35 37 39	1438098-5	KEY "H"
1 2 3 4 5 6 7 8 9 10 11 12 13 14 15 16 21 22 24 31 32 33 35 37 38 39 40	1438098-4	KEY "H"
1 2 3 4 5 6 7 8 9 10 11 12 13 14 15 16 17 18 21 22 24 29 30 35 37 38 39 40	1438098-3	KEY "H"
1 2 3 4 5 6 7 8 9 10 11 12 13 14 15 16 17 18 21 22 24 29 30 31 32 33 35 37 38 39 40	1438098-2	KEY "H"
1 2 3 4 5 6 7 8 9 10 24 35 36	8-1419157-5	KEY "G"
	1438099-1	KEY "J"
	1438098-1	KEY "H"
	8-1419157-7	KEY "G"

CAVITIES WITH A NUMERIC SYMBOL INDICATE CLOSED TERMINAL HOLE POSITIONS

BLANK CAVITIES INDICATE OPEN TERMINAL HOLE POSITIONS

4805 (3/13)

REVISIONS

P	LTR	DESCRIPTION	DATE	DWN	APVD
	-	SEE SHEET 1	-	-	-

PIN-OUT CHART

TERMINAL HOLE POSITION	ASSEMBLY PART NUMBER	PLUG KEYING OPTION
	2098034-1	KEY "H"
1 2 3 4 5 6 11 12 13 14 15 16 21 22 23 24 26 27 28 29 33 35 36 37 38 39 1-1438435-6		KEY "L"
1 2 3 4 5 6 11 12 13 14 15 16 21 22 23 24 33 35 36 37 38 39 1-1438435-5		KEY "L"
3 4 5 6 13 14 15 16 21 22 23 24 31 32 33 36 38 1-1438435-4		KEY "L"
3 4 5 6 13 14 15 16 21 22 23 24 33 35 36 37 38 39 1-1438435-3		KEY "L"
3 4 5 6 13 14 15 16 21 22 23 24 33 36 38 1-1438435-2		KEY "L"
1 2 3 4 5 6 9 10 11 12 13 14 15 16 17 18 21 22 23 24 30 31 32 33 35 36 37 38 39 40 1-1438435-1		KEY "L"
3 5 7 8 13 14 15 16 17 18 19 20 21 22 23 24 25 30 31 32 35 37 39 4-1924513-8		KEY "J"
3 5 7 8 13 14 15 16 17 18 19 20 21 22 23 24 25 26 27 30 31 32 33 34 35 37 39 4-1924513-7		KEY "J"
3 5 7 8 13 14 15 16 17 18 19 20 21 22 23 24 25 28 30 31 32 35 37 39 4-1924513-6		KEY "J"
5 6 7 8 15 16 19 20 26 32 39 40 4-1924513-5		KEY "J"
1 2 5 6 7 8 11 12 15 16 17 18 19 20 21 22 23 24 26 32 35 36 37 38 39 40 4-1924513-4		KEY "J"
7 8 17 18 25 26 31 39 40 4-1924513-3		KEY "J"
3 5 7 8 13 14 15 16 17 18 19 20 21 22 23 24 25 26 27 28 30 31 32 33 34 35 37 39 4-1924513-2		KEY "J"
13 14 25 26 31 39 40 4-1924513-1		KEY "J"
3 5 7 8 13 14 15 16 17 18 19 20 21 22 23 24 25 26 27 28 30 31 32 33 34 35 37 40 4-1924513-0		KEY "J"
7 8 17 18 3-1924513-9		KEY "J"
3 4 5 6 7 8 15 16 17 18 21 22 23 24 25 26 35 36 37 38 39 40 3-1924513-8		KEY "J"
1 2 3 4 5 6 7 8 11 12 13 14 15 16 17 18 21 22 23 24 25 26 27 28 29 30 31 32 33 34 35 36 37 38 39 40 3-1924513-7		KEY "J"
1 2 11 12 25 26 39 40 3-1924513-6		KEY "J"
1 2 11 12 25 26 29 30 31 39 40 3-1924513-5		KEY "J"
5 6 7 8 15 16 17 18 23 24 25 26 29 30 37 38 39 40 3-1924513-4		KEY "J"
5 6 7 8 15 16 17 18 23 24 25 26 31 37 38 39 40 3-1924513-3		KEY "J"
25 26 39 40 3-1924513-2		KEY "J"
5 6 7 8 11 12 17 18 23 24 25 26 31 37 38 39 40 3-1924513-1		KEY "J"
1 2 11 12 19 20 25 26 29 30 31 32 33 39 40 3-1924513-0		KEY "J"
1 2 11 12 23 24 25 26 29 30 31 32 33 37 38 39 40 2-1924513-9		KEY "J"
1 2 11 12 19 20 23 24 25 26 29 30 31 32 33 37 38 39 40 2-1924513-8		KEY "J"
1 2 11 12 25 26 29 30 31 32 33 39 40 2-1924513-7		KEY "J"
1 2 5 6 7 8 11 12 15 16 17 18 21 22 23 24 25 26 29 30 31 32 33 35 36 37 38 39 40 2-1924513-6		KEY "J"
3 4 13 14 23 24 25 26 31 37 38 39 40 2-1924513-5		KEY "J"
3 4 13 14 25 26 31 39 40 2-1924513-4		KEY "J"
5 6 7 8 15 16 17 18 23 24 25 26 29 30 31 37 38 39 40 2-1924513-3		KEY "J"
3 4 5 6 11 12 15 16 31 32 35 36 37 38 39 40 2-1924513-2		KEY "J"
3 4 5 6 13 14 15 16 31 32 34 35 36 37 38 39 40 2-1924513-1		KEY "J"
1 2 11 12 25 26 31 39 40 2-1924513-0		KEY "J"
1 2 5 6 7 8 11 12 15 16 17 18 19 20 21 22 23 24 25 26 29 30 31 32 33 35 36 37 38 39 40 1-1924513-9		KEY "J"
23 24 25 26 31 37 38 39 40 1-1924513-8		KEY "J"
11 12 25 26 31 37 38 39 40 1-1924513-7		KEY "J"
11 12 25 26 31 39 40 1-1924513-6		KEY "J"
25 26 31 39 40 1-1924513-5		KEY "J"
25 26 29 30 31 39 40 1-1924513-4		KEY "J"
1 2 3 4 5 6 7 8 9 10 11 12 13 14 15 16 17 18 19 20 21 22 23 24 25 26 27 28 29 30 31 32 33 34 35 36 37 38 39 40 1924513-9		KEY "J"
1 2 3 4 5 6 11 12 13 14 15 16 21 22 23 24 31 32 33 35 36 37 38 39 40 1924513-8		KEY "J"
1 2 3 4 5 6 7 8 9 10 11 12 13 14 15 16 21 22 24 33 35 1924513-7		KEY "J"
1 2 3 4 5 6 7 8 9 10 11 12 13 14 15 16 21 22 23 24 25 26 31 32 33 34 35 36 1924513-6		KEY "J"
3 4 5 6 13 14 15 16 22 23 31 32 35 37 39 1924513-5		KEY "J"
3 4 5 6 13 14 15 16 21 22 23 24 30 31 32 33 35 36 37 38 39 40 1924513-4		KEY "J"
1 2 3 4 5 6 7 8 9 10 11 12 13 14 15 16 21 22 24 35 1924513-3		KEY "J"
1 2 3 4 5 6 7 8 9 10 11 12 13 14 15 16 21 22 24 31 32 33 35 1924513-2		KEY "J"
1924513-1		KEY "J"
3 4 13 14 31 35 36 37 38 5-1438099-1		KEY "J"
3 4 13 14 21 22 23 24 31 32 39 40 5-1438099-0		KEY "J"
5 6 13 14 15 16 21 22 23 24 33 4-1438099-9		KEY "J"
3 4 13 14 31 32 4-1438099-8		KEY "J"
1 2 3 4 5 6 7 8 11 12 13 14 15 16 19 20 21 22 23 24 26 27 28 29 30 31 32 33 34 35 36 37 38 4-1438099-7		KEY "J"
3 4 5 6 13 14 15 16 21 22 23 24 31 32 33 35 36 37 38 4-1438099-6		KEY "J"
1 2 5 6 7 8 11 12 13 14 15 16 19 20 21 22 23 24 26 27 28 29 32 33 37 4-1438099-5		KEY "J"
3 4 5 6 13 14 15 16 21 22 23 24 31 32 33 34 35 36 37 38 39 40 3-1438098-2		KEY "H"
1 2 3 4 5 6 7 8 11 12 13 14 15 16 19 20 22 23 24 25 26 27 28 29 30 31 32 33 34 35 36 37 38 39 40 3-1438098-1		KEY "H"
3 4 5 6 13 14 15 16 25 32 33 34 35 36 37 38 39 40 3-1438098-0		KEY "H"
3 4 5 6 13 14 15 16 33 35 37 39 40 2-1438098-9		KEY "H"
5 6 13 14 15 16 21 22 23 24 33 35 36 37 38 39 2-1438098-8		KEY "H"
3 4 5 6 13 14 15 16 21 22 23 24 33 35 36 37 38 39 2-1438098-7		KEY "H"
1 2 3 4 5 6 7 8 9 10 11 12 13 14 15 16 17 18 19 20 21 22 23 24 25 26 27 28 29 30 31 32 33 34 35 36 37 38 39 40	ASSEMBLY PART NUMBER	PLUG KEYING OPTION

CAVITIES WITH A NUMERIC SYMBOL INDICATE CLOSED TERMINAL HOLE POSITIONS

BLANK CAVITIES INDICATE OPEN TERMINAL HOLE POSITIONS

THIS DRAWING IS A CONTROLLED DOCUMENT.

DIMENSIONS: mm

TOLERANCES UNLESS OTHERWISE SPECIFIED:
0 PLC ±-
1 PLC ±0.3
2 PLC ±0.10
3 PLC ±-
4 PLC ±-
ANGLES ±3°

MATERIAL SEE CHART ON SHEET 2

FINISH - -

DWN	M. FORISKA	19APR2002
CHK	M. FORISKA	19APR2002
APVD	A. VALASEK	19APR2002
PRODUCT SPEC	-	
APPLICATION SPEC	-	
WEIGHT	-	

TE Connectivity

NAME 40 WAY ARM, PLUG ASSEMBLY WITHOUT SHORTING BARS, CUSTOMER SPEC.

SIZE	CAGE CODE	DRAWING NO	RESTRICTED TO
A1	00779	C-8-1419157-7	-

CUSTOMER DRAWING | SCALE 3:1 | SHEET 4 OF 5 | REV CD

THIS DRAWING IS UNPUBLISHED. RELEASED FOR PUBLICATION 20
© COPYRIGHT 20 BY - ALL RIGHTS RESERVED.

REVISIONS

P	LTR	DESCRIPTION	DATE	DWN	APVD
	-	SEE SHEET 1	-	-	-

PIN-OUT CHART

| | | |

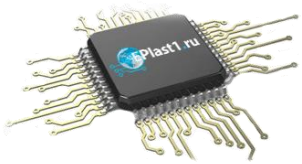
Компания «ЭлектроПласт» предлагает заключение долгосрочных отношений при поставках импортных электронных компонентов на взаимовыгодных условиях!

Наши преимущества:

- Оперативные поставки широкого спектра электронных компонентов отечественного и импортного производства напрямую от производителей и с крупнейших мировых складов;
- Поставка более 17-ти миллионов наименований электронных компонентов;
- Поставка сложных, дефицитных, либо снятых с производства позиций;
- Оперативные сроки поставки под заказ (от 5 рабочих дней);
- Экспресс доставка в любую точку России;
- Техническая поддержка проекта, помощь в подборе аналогов, поставка прототипов;
- Система менеджмента качества сертифицирована по Международному стандарту ISO 9001;
- Лицензия ФСБ на осуществление работ с использованием сведений, составляющих государственную тайну;
- Поставка специализированных компонентов (Xilinx, Altera, Analog Devices, Intersil, Interpoint, Microsemi, Aeroflex, Peregrine, Syfer, Eurofarad, Texas Instrument, Miteq, Cobham, E2V, MA-COM, Hittite, Mini-Circuits,General Dynamics и др.);

Помимо этого, одним из направлений компании «ЭлектроПласт» является направление «Источники питания». Мы предлагаем Вам помощь Конструкторского отдела:

- Подбор оптимального решения, техническое обоснование при выборе компонента;
- Подбор аналогов;
- Консультации по применению компонента;
- Поставка образцов и прототипов;
- Техническая поддержка проекта;
- Защита от снятия компонента с производства.



Как с нами связаться

Телефон: 8 (812) 309 58 32 (многоканальный)
Факс: 8 (812) 320-02-42
Электронная почта: org@eplast1.ru
Адрес: 198099, г. Санкт-Петербург, ул. Калинина, дом 2, корпус 4, литера А.