566393 ⇔ 566393

DRAWING MADE IN THIRD ANGLE PROJECTION

PART NUMBER	REV	FIRST USED	MACHINE REFERENCE	FEED TYPE
566393–1	J	356462–2	G–SPLICE TERM	AIR FEED
566393–2	K	2161300–1	5K CE&GII THRU SPLICE	AIR FEED
7–566393–7	G	356462–2	SPARE PARTS KIT	–
7–566393–8	K	–	CONV. KIT FOR –1 TO –2	–

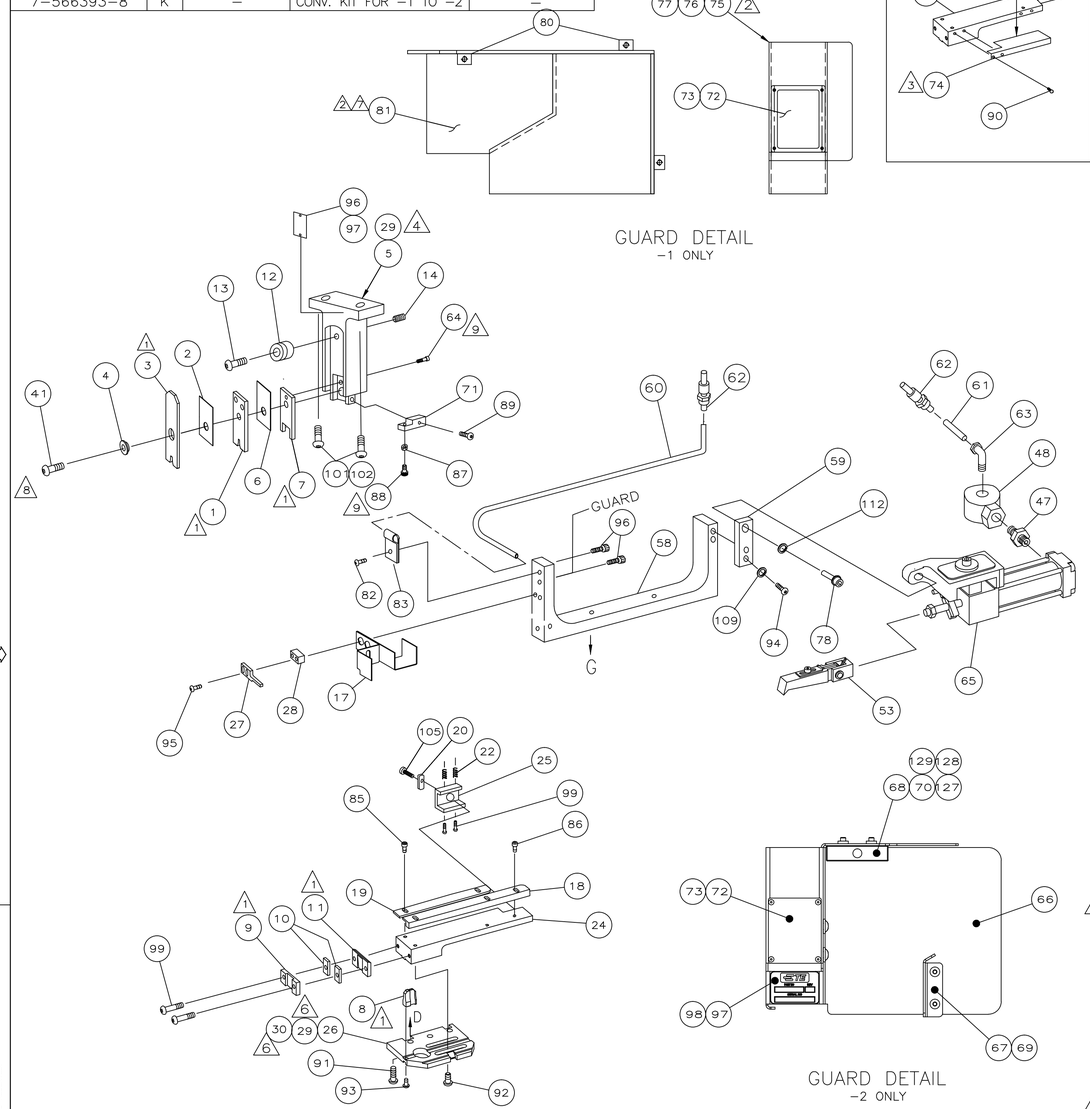

TERMINAL NAME: .187 AMPLIVAR FASTON™ FLAG RECEPT

–		63940
		1217417

CRIMPING DATA

PAD LTR	CRIMP HEIGHT	WIRE SIZE
3	.069 ±.002 [1.75 ±0.05mm]	4050 CMA
3	.065 ±.002 [1.65 ±0.05mm]	3250 CMA
3	.061 ±.002 [1.55 ±0.05mm]	2600 CMA
3	.057 ±.002 [1.45 ±0.05mm]	2000 CMA

CRIMP	SIZE	TYPE	RANGE
WIRE	.100 [2.54mm]	F	2000–4050 CMA
INSUL	.100 [2.54mm]	0	–

WIRE STRIP LENGTH	TERM APPL SPEC	FEED	APPL INSTRUCTION	SET UP GAGE	LAYOUT
–	114–2152	.570	408–8318 (–1) 408–127000 (–2)	458638–1	L1810

QTY REQD PER ASSY				U/M	PARTS LIST PART NO	DESCRIPTION	ITEM NO
2	–	2	–	–	18029–2	M4 HEX NUT	129
2	–	2	–	–	18025–2	M4 LOCK WASHER	128
2	–	2	–	–	18027–2	M4 FLAT WASHER	127
1	–	1	–	–	408–32162	THRU SPLICE IS SHEET–GII	126
–	–	1	–	–	408–127000	THRU SPLICE IS SHEET	125
–	–	1	1	–	217238–1	GENERAL INSTRUCTION PACKAGE	124
–	–	–	1	–	408–8318	THRU SPLICE IS SHEET	123
							122
							121
							120
							119
							118
–	–	–	–	–	–	–	117
–	–	–	–	–	–	–	116
							115
							114
–	–	–	–	–	–	–	113
–	–	1	1	–	21024–8	WASHER, LOCK (3/8)	112
							111
							110
–	–	2	2	–	21024–5	WASHER,LOCK(NO.10)	109
							108
							107
							106
–	–	1	1	–	22353–8	SCR,SHLD(Ø.187x.25)DRAG LEVER	105
							104
							103
2	–	2	–	–	3–18023–3	SCR SHC (M6X50)	102
–	–	–	2	–	3–18023–0	SCR SHC (M6X25)	101
–	–	2	2	–	21017–2	SCR,DRIVE(#2x.19)ID PLATE	100
–	–	4	4	–	3–21002–0	SCR,BHC(10–32x.88)DRAG	99
–	–	1	1	–	819347–1	PLATE, IDENTIFICATION	98
–	–	AR	AR	–	25527–3	TAPE	97
–	–	1	1	–	690701–2	PLATE ID	96
–	–	2	2	–	2–21002–4	SCR,SHC(8–32X.50)STRIPPER	95
–	–	2	2	–	3–21000–5	SCR,SHC(10–32x.50)	94
–	–	1	1	–	22733–8	SCR,BHC(8–32x.38 LW)ANVIL	93
–	–	4	4	–	3–21002–3	SCR,BHC(1/4–20x.50)ST GD PL	92
–	–	3	3	–	2–22733–8	SCR,BHC(1/4–20x.62)HSG	91
–	–	2	2	–	2–21002–0	SCR,BHC(8–32x.38)GUARD	90
–	–	1	1	–	1–21000–9	SCR SHC (6–32 x.38)	89
–	–	1	1	–	811242–2	HOLD DOWN BUMPER	88
–	–	1	1	–	21018–5	NUT, HEX 6–32	87
–	–	3	3	–	1–21002–7	SCR,BHC(6–32x.38)STRIP GUIDE	86
–	–	2	2	–	1–21002–6	SCR,BHC(6–32x.25)STRIP GUIDE	85
							84
–	–	1	1	–	986220–9	CABLE CLAMP	83
–	–	1	1	–	2–21002–6	SCR,BHC(10–32X.38)	82
–	–	–	1	–	1338307–1	GUARD,APPLICATOR FEED	81
–	–	–	3	–	1–21100–8	SCR,BHC10–24UNCX.38LG.	80
							79
–	–	1	1	–	3–21001–3	SCR, CAP 3/8–16UNC x .75	78
–	–	–	2	–	2–21002–5	SCR,BHC(10–32X.25)GUARD	77
–	–	–	1	–	1338320–3	GUARD, END FEED	76
–	–	REF	REF	–	1490705–1	KIT, WIRE SHELF	75
–	–	–	1	–	662434–3	GUARD	74
–	–	4	4	–	1–21000–0	SCR,SHC(2–56X.25)GUARD WINDOW	73
–	–	1	1	–	1338174–1	WINDOW, GUARD	72
–	–	1	1	–	1338213–1	BRACKET, HOLDDOWN	71
–78	–77	–2	–1	U/M	PART NO	DESCRIPTION	ITEM NO

QTY REQD PER ASSY				U/M	PARTS LIST PART NO	DESCRIPTION	ITEM NO
2	–	2	–	–	1–18023–3	SCR, SHC, M4X16	70
2	–	2	–	–	18024–6	SCR, BHC, M4X8	69
1	–	1	–	–	2168489–1	ACTUATOR, SPARE MCI	68
1	–	1	–	–	2161273–3	GUARD, END FEED INSERT	67
1	–	1	–	–	2161272–1	GUARD, END FEED	66
–	–	1	1	–	2–460277–2	AIR FEED ASSY (1 INCH)	65
–	–	1	1	–	1–21000–8	SCR, SHC (6–32 X .25)	64
–	–	1	1	–	980285–2	ELBOW, SWIVEL 1/8 NPT – 1/4 T	63
–	–	2	2	–	23238–1	QUICK DISCONNECT	62
–	–	12.00	12.00	IN	27319–4	TUBING, POLY–FLO Ø.25	61
–	–	18.00	18.00	IN	27319–4	TUBING, POLY–FLO Ø.25	60
–	–	1	1	–	1338207–1	BRACKET, FEED EXTENSION	59
–	–	1	1	–	1338208–1	BRACKET, FEED	58
							57
							56
							55
							54
–	–	1	1	–	2–460680–0	FEED FINGER ASSY	53
							52
							51
							50
							49
–	–	1	1	–	22374–7	VALVE, QUICK EXHAUST	48
–	–	1	1	–	22304–1	NIPPLE, HEX 1/8 NPT	47
							46
–	–	–	–	–	–	–	45
–	–	–	–	–	–	–	44
–	–	–	–	–	–	–	43
–	–	–	–	–	–	–	42
–	–	1	1	–	7–21002–9	BOLT, CRIMPER(5/16–24x1.00)	41
–	–	–	–	–	–	–	40
–	–	–	–	–	–	–	39
–	–	–	–	–	–	–	38
–	–	–	–	–	–	–	37
–	–	–	–	–	–	–	36
–	–	–	–	–	–	–	35
							34
							33
							32
							31
–	–	2	2	–	18027–4	WASHER, FLAT M6	30
–	–	2	2	–	2–18023–8	SCR,SHC M6 X 20	29
–	–	1	1	–	5–690451–2	SPACER, STRIPPER	28
–	–	1	1	–	240639–4	STRIPPER	27
–	–	1	1	–	1338398–1	PLATE, BASE	26
–	–	1	1	–	240792–7	DRAG, TERMINAL	25
–	–	1	1	–	662383–1	PLATE, STRIP GUIDE	24
							23
–	–	2	2	–	1–22284–0	SPRING, DRAG	22
							21
–	–	1	1	–	240793–4	LEVER, DRAG RELEASE	20
–	–	1	1	–	662388–1	GUIDE, STRIP (REAR)	19
–	–	1	1	–	662387–1	GUIDE, STRIP (FRONT)	18
–	–	1	1	–	1583984–1	GUIDE, WIRE	17
							16
							15
–	–	1	1	–	27058–2	PLUNGER, SPRING, STUBBY	14
–	–	1	1	–	21004–9	SCR, SHLD .31 DIA X .50 LG.	13
–	–	1	1	–	1338124–1	WHEEL, ADJUSTING	12
–	–	1	1	–	240644–5	PLATE, REAR SHEAR	11
–	–	2	2	–	1–240645–2	SPACER, SHEAR PLATE	10
–	–	1	1	–	318704–1	PLATE, FRONT SHEAR	9
–	1	1	1	–	2–456537–2	ANVIL	8
–	–	1	1	–	1338209–2	BLADE, SLUG	7
–	–	1	1	–	7–455888–4	SPACER, CRIMPER	6
–	–	1	1	–	1338212–1	HOLDER, TOOL, ASSEMBLY	5
–	–	1	1	–	238009–8	SPACER, BLOCK CRIMPER	4
–	1	1	1	–	1338211–1	CRIMPER, INSULATION	3
–	–	1	1	–	7–455888–3	SPACER, CRIMPER	2
–	–	1	1	–	1338210–1	CRIMPER, MODIFIED	1
–78	–77	–2	–1	U/M	PART NO	DESCRIPTION	ITEM NO

REVISION OF EACH ASSY NO (WHEN BLANK, USE DWG REVISION)

1. RECOMMENDED SPARE PARTS.
2. GUARD MUST BE IN PLACE WHEN OPERATING APPLICATOR IN A BENCH MACHINE.
3. SEE DRAWING FOR COMPONENTS
4. RECOMMENDED SET UP WIRE FOR TERMINAL 63940. FOR APPLICATOR QUALIFICATION ONLY.
5. USE MANUAL PRECISION ADJUSTMENT LEVER ON G TERMINATOR TO ACHIEVE PROPER CRIMP HEIGHT.
6. ITEM NOT SHOWN
7. ITEM 81 IS ATTACHED TO THE G TERMINATOR GUARD DOOR WITH ITEM 80.
8. CRIMPER BOLT MUST BE LOOSENED TO CHANGE CRIMP HEIGHT ADJUSTING WHEEL. BE SURE TO SEAT THE CRIMPER AGAINST THE ADJUSTING WHEEL AND REALIGN THE TOOLING.
9. CUT TO LENGTH AT ASSEMBLY.

WIRE COMBINATION DATA

REF PAD LTR	REF CRIMP HEIGHT	MAG WIRE
3	.069	(2) 17 1/2
3	.057	(1) 20 & (1) 21

P	F	LTR	REVISION RECORD	APP	DATE
		K	ECR–15–009539	RS	07–15
		J	ECR–14–012131	TE	08–14
		H	ECR–11–025988	SX	12–11
		G1	ECR–11–023910	SX	11–11

DIMENSIONS IN INCHES. DO NOT SCALE PRINT.
TOLERANCES UNLESS OTHERWISE SPECIFIED:
2 PLC DEC ±.25
3 PLC DEC ±–
4 PLC DEC ±–
ANGLES ± –
SURF TEXTURE: √
REMOVE BURRS, BREAK SHARP EDGES R.015 MAX

MATL – – HT TR – – FIN – –

DR K.STAKEM 11/3/99 APP T.ELBIN 11/3/99
CHK C.ERISMAN 11/3/99 REL – –

TE Connectivity Harrisburg, PA 17105–3608

NAME END FEED PIGTAIL SPLICE W/TRIM
MACHINE REF G–SPLICE
SCALE – D DWG NO 566393 SHEET 1 OF 1 REV K

CAGE CODE 00779 CUSTOMER AND ASSEMBLY DRAWING
RESTRICTED TO

LOC A DIST 66

THIS DRAWING IS A CONTROLLED DOCUMENT.
RELEASED FOR PUBLICATION 20 JUL 1999
BY AMP INCORPORATED. ALL RIGHTS RESERVED.
© COPYRIGHT 1999
THIS DRAWING IS PROPRIETARY TO TYCO ELECTRONICS CORPORATION

Translated 070411,104241 (MMMDD.HHMMSS) from CompuTherm, Inc., Medusa Revision 12.2.01

Компания «ЭлектроПласт» предлагает заключение долгосрочных отношений при поставках импортных электронных компонентов на взаимовыгодных условиях!

Наши преимущества:

- Оперативные поставки широкого спектра электронных компонентов отечественного и импортного производства напрямую от производителей и с крупнейших мировых складов;
- Поставка более 17-ти миллионов наименований электронных компонентов;
- Поставка сложных, дефицитных, либо снятых с производства позиций;
- Оперативные сроки поставки под заказ (от 5 рабочих дней);
- Экспресс доставка в любую точку России;
- Техническая поддержка проекта, помощь в подборе аналогов, поставка прототипов;
- Система менеджмента качества сертифицирована по Международному стандарту ISO 9001;
- Лицензия ФСБ на осуществление работ с использованием сведений, составляющих государственную тайну;
- Поставка специализированных компонентов (Xilinx, Altera, Analog Devices, Intersil, Interpoint, Microsemi, Aeroflex, Peregrine, Syfer, Eurofarad, Texas Instrument, Miteq, Cobham, E2V, MA-COM, Hittite, Mini-Circuits,General Dynamics и др.);

Помимо этого, одним из направлений компании «ЭлектроПласт» является направление «Источники питания». Мы предлагаем Вам помощь Конструкторского отдела:

- Подбор оптимального решения, техническое обоснование при выборе компонента;
- Подбор аналогов;
- Консультации по применению компонента;
- Поставка образцов и прототипов;
- Техническая поддержка проекта;
- Защита от снятия компонента с производства.

Как с нами связаться

Телефон: 8 (812) 309 58 32 (многоканальный)
Факс: 8 (812) 320-02-42
Электронная почта: org@eplast1.ru
Адрес: 198099, г. Санкт-Петербург, ул. Калинина, дом 2, корпус 4, литера А.