Data Sheet
March 26, 2008

FLT007A0/FLT007A0-SR Input Filter Modules
75Vdc Input Voltage Maximum; 7A Output Current Maximum

RoHS Compliant

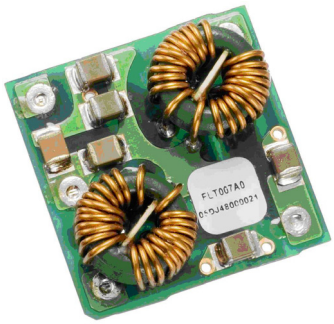

Applications

- Distributed power architectures
- Intermediate bus voltage applications
- Telecommunications equipment
- Wireless Base stations
- Enterprise Networks
- Industrial equipment

Options

- Surface Mount Interconnect (-SR)

Features

- Compliant to RoHS EU Directive 2002/95/EC (Z versions)
- Compatible in a Pb-free or SnPb reflow environment (Z versions)
- Surface Mount and Through hole versions
- Common-mode and Differential-mode filtering
- Small size and low profile
  25.4 mm x 25.4 mm x 12.2 mm
  (1 x 1 x 0.48 in)
- Same footprint as FLTR75V5 module
- Cost efficient open frame design
- Wide operating temperature range (-40°C to +85°C)
- Meets the voltage isolation requirements for ETSI 300-132-2 and complies with and is licensed for Basic Insulation rating per EN60950-1
- *UL** 60950-1 Recognized, *CSA*† C22.2 No. 60950-1-03 Certified, and *VDE*‡ 0805:2001-12 (EN60950-1) Licensed
- CE mark meets 73/23/EEC and 93/68/EEC directives§
- ISO** 9001 and ISO 14001 certified manufacturing facilities

Description

The FLT007A0 filter module is designed to operate over an input voltage range up to 75Vdc at output currents up to 7A in an ambient temperature of -40ºC to 85ºC. The filter module is optimized for use with dc/dc converter modules, to significantly reduce the conducted differential and common-mode noise returned to the power source. This filter module enables designers to meet the requirements of EMI standards CISPR 22 (EN55022) and FCC Class B by insertion in-line between the power source and the dc/dc converter module. These modules are designed and manufactured to be either surface mounted (-SR version) or through hole mounted on PCBs.

* *UL* is a registered trademark of Underwriters Laboratories, Inc.
† *CSA* is a registered trademark of Canadian Standards Association.
‡ *VDE* is a trademark of Verband Deutscher Elektrotechniker e.V.
** ISO is a registered trademark of the International Organization of Standards

Absolute Maximum Ratings

Stresses in excess of the absolute maximum ratings can cause permanent damage to the device. These are absolute stress ratings only, functional operation of the device is not implied at these or any other conditions in excess of those given in the operations sections of the data sheet. Exposure to absolute maximum ratings for extended periods can adversely affect the device reliability.

Parameter	Device	Symbol	Min	Max	Unit
Input Voltage Continuous	All	V_{IN}	0	100	Vdc
Operating Ambient Temperature (see Thermal Considerations section)	All	T_A	-40	85	°C
Storage Temperature	All	T_{stg}	-55	125	°C
I/O to Ground Isolation	All	–	–	2250	Vdc

Electrical Specifications

Unless otherwise indicated, specifications apply over all operating input voltage, resistive load, and temperature conditions.

Parameter	Device	Symbol	Min	Typ	Max	Unit
Operating Input Voltage	All	V_{IN}	0	24/48	75	Vdc
Maximum Input-to-Output Current (V_{IN}= 0 to $V_{iN,max}$)	All	I_{max}			7	Adc
Resistance per leg	All	R			25	mΩ

CAUTION: This power module is not internally fused. An input line fuse must always be used.

This power module can be used in a wide variety of applications, ranging from simple standalone operation to an integrated part of sophisticated power architecture. To preserve maximum flexibility, internal fusing is not included, however, to achieve maximum safety and system protection, always use an input line fuse. The safety agencies require a fast-acting fuse with a maximum rating of 10 A (see Safety Considerations section). Based on the information provided in this data sheet on inrush energy and maximum dc input current, the same type of fuse with a lower rating can be used. Refer to the fuse manufacturer's data sheet for further information.

Insertion Loss Tables

Parameter	Device	Symbol	Min	Typ	Max	Unit
Common-mode Insertion Loss						
50Ω circuit, 500kHz	All		44	50		dB
50Ω circuit, 1MHz	All		54	60		dB
50Ω circuit, 10MHz	All		44	50		dB
Differential-mode Insertion Loss						
50Ω circuit, 500kHz	All		44	50		dB
50Ω circuit, 1MHz	All		60	66		dB
50Ω circuit, 10MHz	All		40	46		dB

General Specifications

Parameter	Min	Typ	Max	Unit
Calculated MTBF (V_{IN}= $V_{IN, nom}$, I_O= 0.8$I_{O, max}$, T_A=40°C) Telecordia SR 332 Issue 1: Method 1, case 3		22,576,100		Hours
Weight	—	7.8 (0.275)	—	g (oz.)

Characteristic Curves

The following figures provide typical characteristics for the FLT007A0 Module.

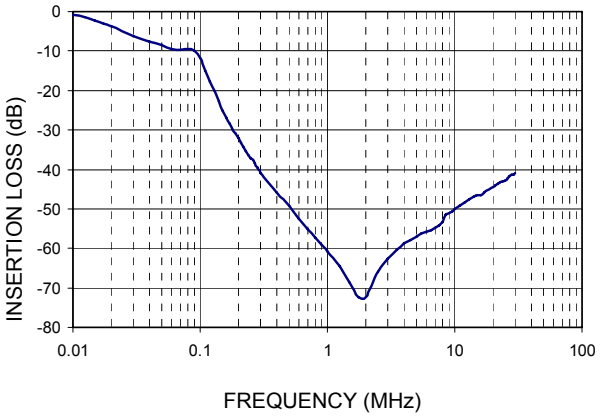

Figure 1. Typical Common-Mode Insertion Loss in a 50Ω circuit.

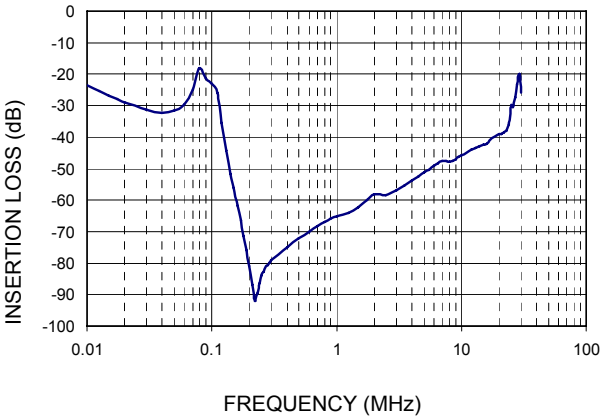

Figure 2. Typical Differential-Mode Insertion Loss in a 50Ω circuit.

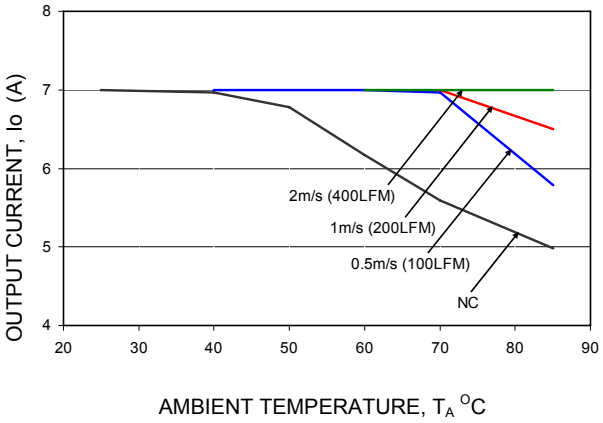

Figure 3. Derating Output Current versus Local Ambient Temperature and Airflow.

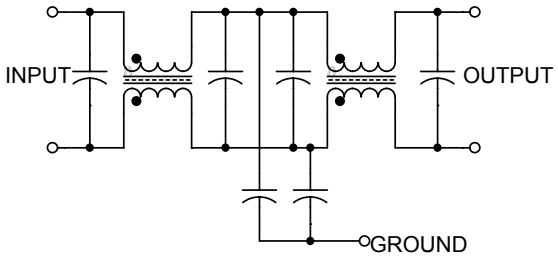

Figure 4. Internal Schematic

Application Guidelines

Conducted noise on the input power lines can occur as either differential-mode or common-mode noise currents. Differential-mode noise is measured between the two input lines, and is found mostly at the low frequency end of the spectrum. This noise shows up as noise at the fundamental switching frequency and its harmonics. Common-mode noise is measured between the input lines and ground and is mostly broadband noise above 10 MHz. The high-frequency nature of common-mode noise is mostly due to the high-speed switching transitions of power train components.
Either or both types of noise may be covered in a specification, as well as a combination of the two.

Differential-mode noise is best attenuated using a filter composed of line-to-line capacitors (X caps) and series inductance, provided by either a discrete inductor or the leakage inductance of a common-mode choke. In addition to the differential filtering provided by the filter module, it is recommended that an electrolytic capacitor be located at the converter side of the filter to provide additional attenuation of low-frequency differential noise and to provide a low source impedance for the converter, preventing input filter oscillations and load transient induced input voltage dips.

Open-frame DC/DC converter modules and the older metal-cased DC/DC converter modules require slightly different filtering arrangements. The FLT007A0 series of modules are optimized for the newer open-frame series of modules, but can also be used with older metal-case modules. The main differences in filtering recommendations between the two types of modules are in common-mode filtering, as explained below.

Filtering Open-Frame DC/DC Converter Modules

For filtering open-frame DC/DC converter modules, the recommended circuit is shown in Fig. 5. In addition to the input electrolytic filter capacitor C1 (recommended value is a minimum of 100uF and approximately 1uF/W at power levels above 100W), common-mode filtering capacitors C2 and C3 should be connected between the input and outputs as shown. Suitable values for common-mode capacitors C2 and C3 are in the range between 1000pF to 0.1µF are usually indicated in the DC/DC converter data sheet. These capacitors need to be rated for the isolation voltage desired between the input and output sides of the DC/DC converter module. The recommended power layout of the modules showing where the two common-mode capacitors are to be placed is shown in Fig. 6.

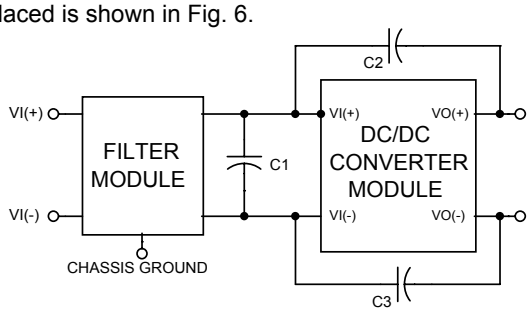

Figure 5. Schematic diagram showing recommended connection of the FLT007A0 filter module with open-frame DC/DC converter modules.

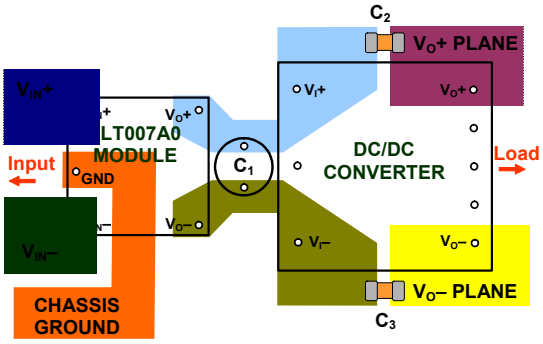

Figure 6. Diagram showing recommended layout of the FLT007A0 filter module with open-frame DC/DC converter modules.

Filtering Metal-Case DC/DC Converter Modules

For metal-case DC/DC converter modules with a case pin, a different filtering arrangement and layout is recommended. Figure 7 shows the schematic diagram of the recommended circuit. The main difference with open-frame module is the use of an isolated shield plane located underneath the module which is connected through capacitors C2 through C5 to the input and output connections of the module. The shield plane along with the case of the module serves as a Faraday shield helping reduce EMI. The corresponding layout for metal-case modules is shown in Fig. 8.

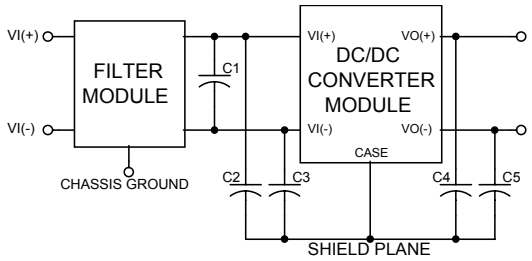

Figure 7. . Schematic diagram showing recommended connection of the FLT007A0 filter module with metal-cased DC/DC converter modules.

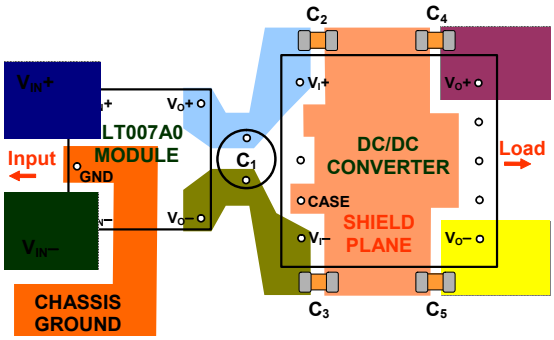

Figure 8. Diagram showing recommended layout of the FLT007A0 filter module with metal-case DC/DC converter modules.

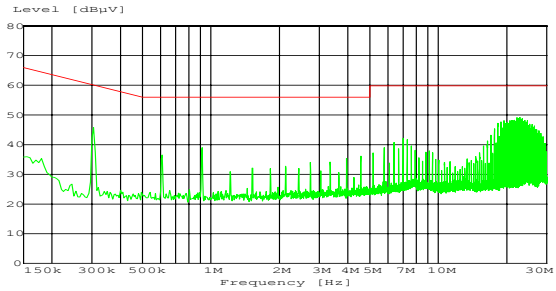

Figure 9. Experimental results showing conducted EMI measured using a FLT007A0 module with a QBE025A0B1 DC/DC converter.

Example Data Showing Results using the FLT007A0 Modules

Figure 9 shows example results obtained using a QBE025A0B1 DC/DC converter module with the FLT007A0 filter module. The QBE025A0B1 module is operated at an input voltage of 43.2V and output loading corresponding to an input current of 6.2A, a level close to the 7A capability of the FLT007A0 filter module. A 10nF ceramic capacitor was connected between Vin(-) and Vo(-) and a 4700pF ceramic capacitor between Vin(+) and Vo(+). The results show that the filter module is capable of meeting EN55022 Class B limits with sufficient margin.

Thermal Considerations

Power modules operate in a variety of thermal environments; however, sufficient cooling should always be provided to help ensure reliable operation.

Considerations include ambient temperature, airflow, module power dissipation, and the need for increased reliability. A reduction in the operating temperature of the module will result in an increase in reliability. The thermal data presented here is based on physical measurements taken in a wind tunnel. The test set-up is shown in Fig. 10. Note that the airflow is parallel to the long axis of the module as shown in Fig. 10.

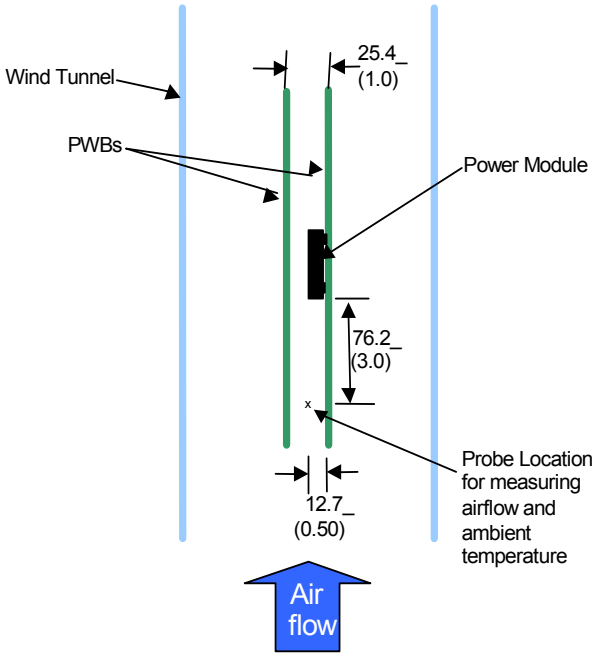

Figure 10. Thermal Test Set-up.

The thermal reference point, T_{ref} used in the specifications is shown in Figure 11. For reliable operation this temperature should not exceed 125°C.

The output power of the module should not exceed the rated output current of the module.

Please refer to the Application Note "Thermal Characterization Process For Open-Frame Board-Mounted Power Modules" for a detailed discussion of thermal aspects including maximum device temperatures.

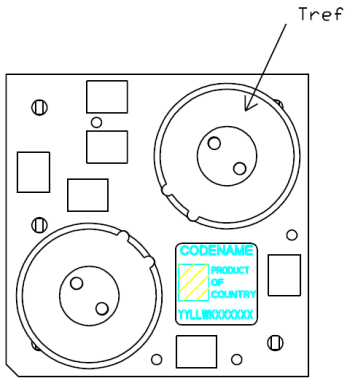

Figure 11. T_{ref} Temperature measurement location.

Post solder Cleaning and Drying Considerations

Post solder cleaning is usually the final circuit-board assembly process prior to electrical board testing. The result of inadequate cleaning and drying can affect both the reliability of a power module and the testability of the finished circuit-board assembly. For guidance on appropriate soldering, cleaning and drying procedures, refer to Lineage Power *Board Mounted Power Modules: Soldering and Cleaning* Application Note.

Through-Hole Lead-Free Soldering Information

The RoHS-compliant through-hole products use the SAC (Sn/Ag/Cu) Pb-free solder and RoHS-compliant components. They are designed to be processed through single or dual wave soldering machines. The pins have an RoHS-compliant finish that is compatible with both Pb and Pb-free wave soldering processes. A maximum preheat rate of 3°C/s is suggested. The wave preheat process should be such that the temperature of the power module board is kept below 210°C. For Pb solder, the recommended pot temperature is 260°C, while the Pb-free solder pot is 270°C max. Not all RoHS-compliant through-hole products can be processed with paste-through-hole Pb or Pb-free reflow process. If additional information is needed, please consult with your Lineage Power representative for more details.

Surface Mount Information

Pick and Place

The FLT007A0-SR SMT modules use an open frame construction and are designed for a fully automated assembly process. The modules are fitted with a label designed to provide a large surface area for pick and place operations. The label meets all the requirements for surface mount processing, as well as safety standards, and is able to withstand reflow temperatures of up to 300°C. The label also carries product information such as product code, serial number and location of manufacture.

Nozzle Recommendations

The module weight has been kept to a minimum by using open frame construction. Even so, these modules have a relatively large mass when compared to conventional SMT components. Variables such as nozzle size, tip style, vacuum pressure and pick & placement speed should be considered to optimize this process. The minimum recommended nozzle diameter for reliable operation is 5mm. The maximum nozzle outer diameter, which will safely fit within the allowable component spacing, is 8 mm max.

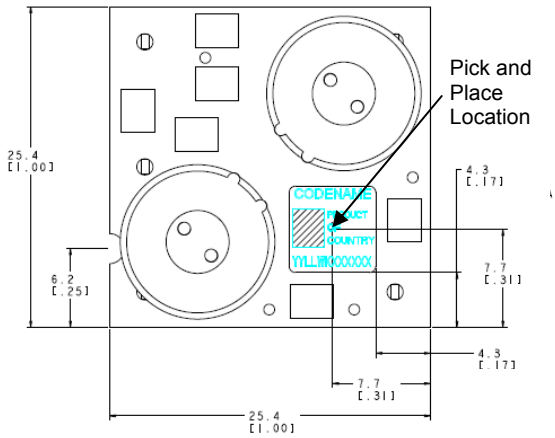

Figure 12. Pick and Place Location.

Tin Lead Soldering

The FLT007A0-SR power modules are lead free modules and can be soldered either in a lead-free solder process or in a conventional Tin/Lead (Sn/Pb) process. It is recommended that the customer review data sheets in order to customize the solder reflow profile for each application board assembly. The following instructions must be observed when soldering these units. Failure to observe these instructions may result in the failure of or cause damage to the modules, and can adversely affect long-term reliability.

In a conventional Tin/Lead (Sn/Pb) solder process peak reflow temperatures are limited to less than 235°C. Typically, the eutectic solder melts at 183°C, wets the land, and subsequently wicks the device connection. Sufficient time must be allowed to fuse the plating on the connection to ensure a reliable solder joint. There are several types of SMT reflow technologies currently used in the industry. These surface mount power modules can be reliably soldered using natural forced convection, IR (radiant infrared), or a combination of convection/IR. For reliable soldering the solder reflow profile should be established by accurately measuring the modules CP connector temperatures.

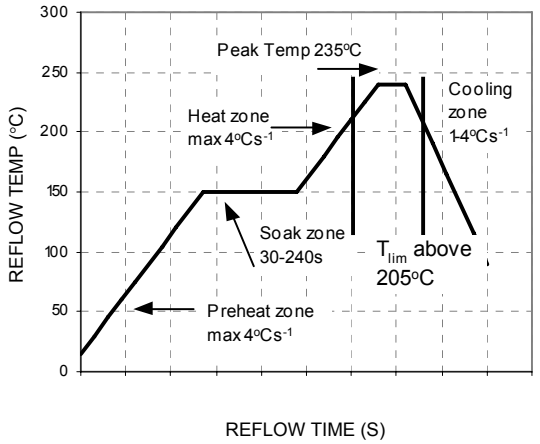

Figure 13. Reflow Profile for Tin/Lead (Sn/Pb) process.

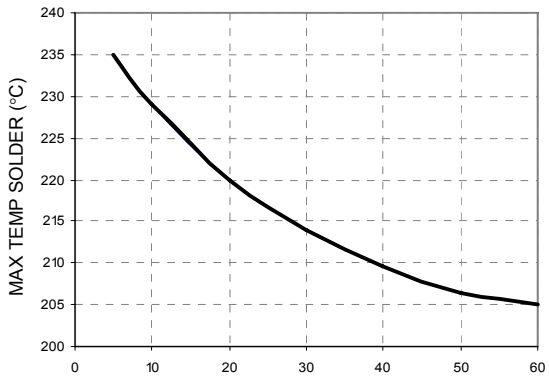

Figure 14. Time Limit Curve Above 205°C Reflow for Tin Lead (Sn/Pb) process.

Lead Free Soldering

The FLT007A0-SR SMT modules are lead-free (Pb-free) and RoHS compliant and are both forward and backward compatible in a Pb-free and a SnPb soldering process. Failure to observe the instructions below may result in the failure of or cause damage to the modules and can adversely affect long-term reliability.

Pb-free Reflow Profile

Power Systems will comply with J-STD-020 Rev. C (Moisture/Reflow Sensitivity Classification for Nonhermetic Solid State Surface Mount Devices) for both Pb-free solder profiles and MSL classification procedures. This standard provides a recommended forced-air-convection reflow profile based on the volume and thickness of the package (table 4-2). The suggested Pb-free solder paste is Sn/Ag/Cu (SAC). The recommended linear reflow profile using Sn/Ag/Cu solder is shown in Figure. 15.

MSL Rating

The FLT007A0-SR SMT modules have a MSL rating of 1.

Storage and Handling

The recommended storage environment and handling procedures for moisture-sensitive surface mount packages is detailed in J-STD-033 Rev. A (Handling, Packing, Shipping and Use of Moisture/Reflow Sensitive Surface Mount Devices). Moisture barrier bags (MBB) with desiccant are required for MSL ratings of 2 or greater. These sealed packages should not be broken until time of use. Once the original package is broken, the floor life of the product at conditions of <= 30°C and 60% relative humidity varies according to the MSL rating (see J-STD-033A). The shelf life for dry packed SMT packages will be a minimum of 12 months from the bag seal date, when stored at the following conditions: < 40° C, < 90% relative humidity.

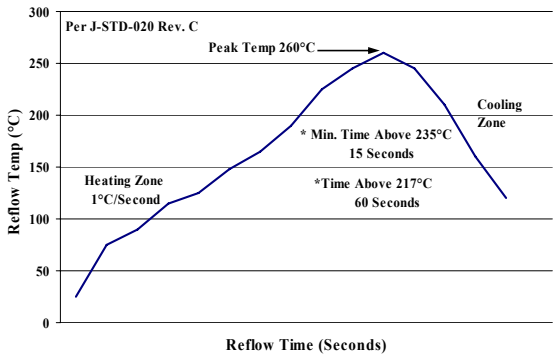

Figure 15. Recommended linear reflow profile using Sn/Ag/Cu solder.

Mechanical Outline

Dimensions are in millimeters and [inches].

Tolerances: x.x mm ± 0.5 mm [x.xx in. ± 0.02 in.] (Unless otherwise indicated)

x.xx mm ± 0.25 mm [x.xxx in ± 0.010 in.]

FLT007A0 (Through Hole Version)

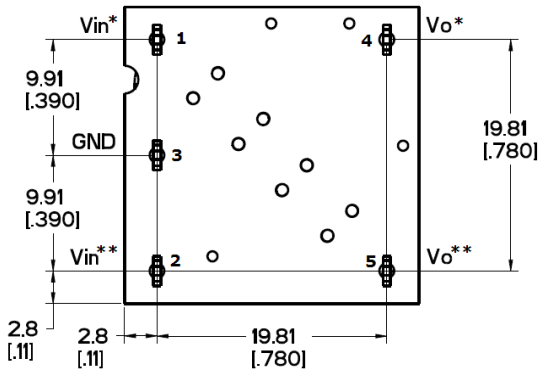

Bottom View

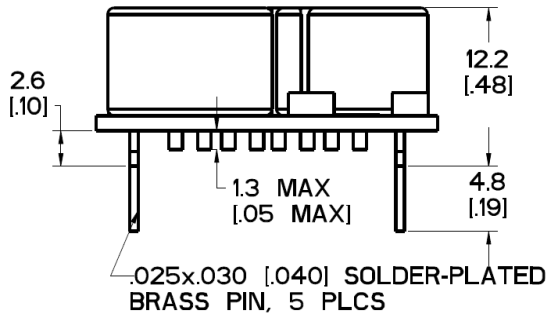

Side View

FLT007A0-SR (SMT Version)

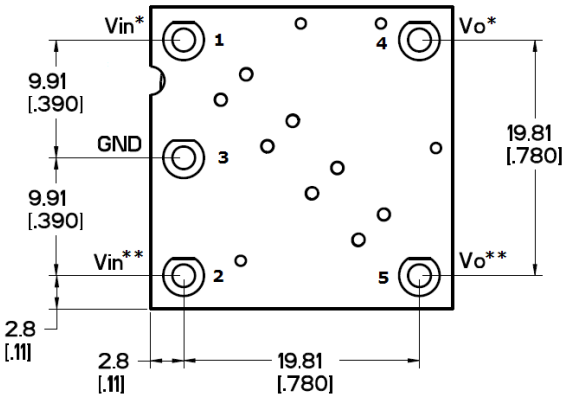

Bottom View

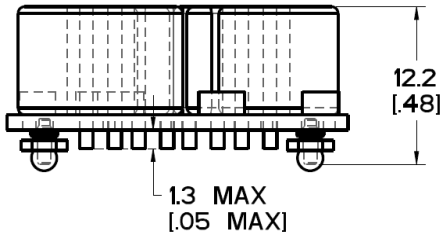

Side View

*** - May be either + or – polarity, but must be same for pin 1 and 4.**

**** - Pin 2 and 5 shall be polarity that is opposite from pins 1 and 4.**

Recommended Pad Layout

Dimensions are in millimeters and [inches].

Tolerances: x.x mm ± 0.5 mm [x.xx in. ± 0.02 in.] (Unless otherwise indicated)
x.xx mm ± 0.25 mm [x.xxx in ± 0.010 in.]

FLT007A0 (Through Hole Version)

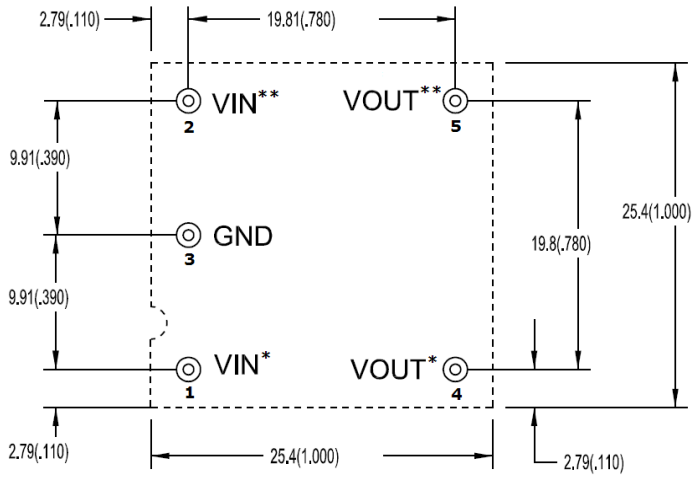

FLT007A0-SR (SMT Version)

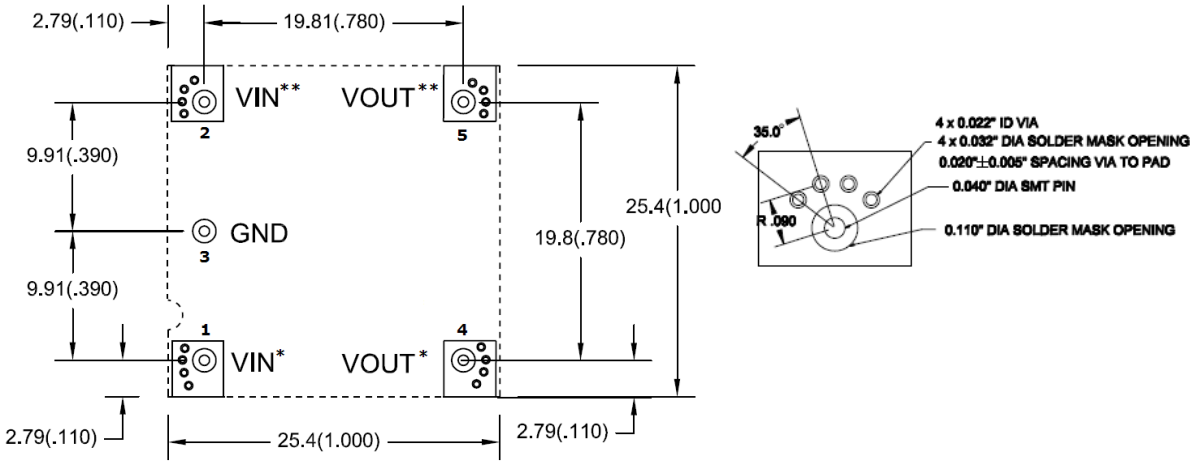

*** - May be either + or – polarity, but must be same for pin 1 and 4.**

**** - Pin 2 and 5 shall be polarity that is opposite from pins 1 and 4.**

Ordering Information

Please contact your Lineage Power Sales Representative for pricing, availability and optional features.

Table 1. Device Codes

Device Code	Input Voltage Range	Output Current	Connector Type	Comcodes
FLT007A0	0 – 75Vdc	7A	TH	108997185
FLT007A0Z	0 – 75Vdc	7A	TH	CC109108692
FLT007A0-SR	0 – 75Vdc	7A	SMT	108997193
FLT007A0-SRZ	0 – 75Vdc	7A	SMT	CC109108701

-Z refers to RoHS-compliant codes

World Wide Headquarters
Lineage Power Corporation
3000 Skyline Drive, Mesquite, TX 75149, USA
+1-800-526-7819
(Outside U.S.A.: **+1-972-284-2626**)
www.lineagepower.com
e-mail: techsupport1@lineagepower.com

Asia-Pacific Headquarters
Tel: +65 6416 4283

Europe, Middle-East and Africa Headquarters
Tel: +49 89 6089 286

India Headquarters
Tel: +91 80 28411633

Lineage Power reserves the right to make changes to the product(s) or information contained herein without notice. No liability is assumed as a result of their use or application. No rights under any patent accompany the sale of any such product(s) or information.

© 2008 Lineage Power Corporation, (Mesquite, Texas) All International Rights Reserved.

Document No:DS05-028 ver 1.23
PDF name: FLT007A0_FLT007A0-SR_ds.pdf

Компания «ЭлектроПласт» предлагает заключение долгосрочных отношений при поставках импортных электронных компонентов на взаимовыгодных условиях!

Наши преимущества:

- Оперативные поставки широкого спектра электронных компонентов отечественного и импортного производства напрямую от производителей и с крупнейших мировых складов;
- Поставка более 17-ти миллионов наименований электронных компонентов;
- Поставка сложных, дефицитных, либо снятых с производства позиций;
- Оперативные сроки поставки под заказ (от 5 рабочих дней);
- Экспресс доставка в любую точку России;
- Техническая поддержка проекта, помощь в подборе аналогов, поставка прототипов;
- Система менеджмента качества сертифицирована по Международному стандарту ISO 9001;
- Лицензия ФСБ на осуществление работ с использованием сведений, составляющих государственную тайну;
- Поставка специализированных компонентов (Xilinx, Altera, Analog Devices, Intersil, Interpoint, Microsemi, Aeroflex, Peregrine, Syfer, Eurofarad, Texas Instrument, Miteq, Cobham, E2V, MA-COM, Hittite, Mini-Circuits,General Dynamics и др.);

Помимо этого, одним из направлений компании «ЭлектроПласт» является направление «Источники питания». Мы предлагаем Вам помощь Конструкторского отдела:

- Подбор оптимального решения, техническое обоснование при выборе компонента;
- Подбор аналогов;
- Консультации по применению компонента;
- Поставка образцов и прототипов;
- Техническая поддержка проекта;
- Защита от снятия компонента с производства.

Как с нами связаться

Телефон: 8 (812) 309 58 32 (многоканальный)
Факс: 8 (812) 320-02-42
Электронная почта: org@eplast1.ru
Адрес: 198099, г. Санкт-Петербург, ул. Калинина, дом 2, корпус 4, литера А.