19-6322; Rev 6/12

# DS1821
# Programmable Digital Thermostat and Thermometer

## FEATURES

- Requires no external components
- Unique 1-Wire® interface requires only one port pin for communication
- Operates over a -55°C to +125°C (-67°F to +257°F) temperature range
- Functions as a standalone thermostat with user-definable trip-points
- Provides 8-bit (1°C resolution) centigrade temperature measurements
- Accuracy is ±1°C over 0°C to +85°C range
- Converts temperature to a digital word in 1 second (max)
- Available in 3-pin TO92 and 8-pin SO packages
- Applications include thermostatic controls, industrial systems, consumer products, thermometers, or any thermally sensitive system

*1-Wire is a registered trademark of Maxim Integrated Products, Inc.*

## PIN ASSIGNMENT

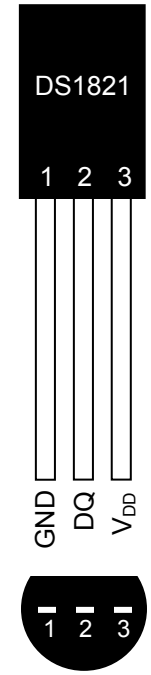


(BOTTOM VIEW)

TO92
(DS1821C)

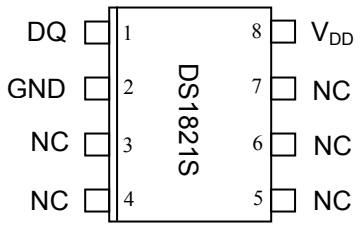


8-pin 208-mil SO
(DS1821S)

## PIN DESCRIPTION

| | |
|---|---|
| GND | - Ground |
| DQ | - Data In/Out and Thermostat Output |
| $V_{DD}$ | - Power Supply Voltage |
| NC | - No Connect |

## DESCRIPTION

The DS1821 can function as a standalone thermostat with user-programmable trip-points or as 8-bit temperature sensor with a 1-Wire digital interface. The thermostat trip-points are stored in nonvolatile memory, so DS1821 units can be programmed prior to system insertion for true standalone operation. The DS1821 has an operating temperature range of –55°C to +125°C and is accurate to ±1°C over a range of 0°C to +85°C. Communication with the DS1821 is accomplished through the open-drain DQ pin; this pin also serves as the thermostat output.

## ORDERING INFORMATION

| PART | PACKAGE MARKING | PIN-PACKAGE |
|---|---|---|
| DS1821C+ | DS1821 | 3 TO92 |
| DS1821S+ | DS1821S | 8 SO (208 mils) |
| DS1821S+T&R | DS1821S | 8 SO (208 mils), 2000 Piece Tape-and-Reel |

*+Denotes a lead(Pb)-free/RoHS-compliant package.*
*T&R = Tape and reel.*

## DETAILED PIN DESCRIPTIONS Table 1

| TO92 | 8-PIN SO* | SYMBOL | DESCRIPTION |
|---|---|---|---|
| 1 | 2 | GND | **Ground pin.** |
| 2 | 1 | DQ | **Open drain data input/output pin** – 1-Wire operation; **Open drain thermostat output pin** –thermostat operation. |
| 3 | 8 | $V_{DD}$ | **Power supply pin.** |

*All pins not specified in this table are "No Connect" pins.

## OVERVIEW

Figure 1 shows a block diagram of the DS1821 and pin descriptions are given in Table 1. The DS1821 can operate as a standalone thermostat with user-programmable trip-points or as 8-bit temperature sensor with a 1-Wire digital interface. The open-drain DQ pin functions as the thermostat output for thermostat operation and as the data I/O pin for 1-Wire communications. The 1-Wire interface provides user access to the nonvolatile (EEPROM) thermostat trip-point registers ($T_H$ and $T_L$), the status/configuration register, and the temperature register.

When configured as standalone thermostat, temperature conversions start immediately at power-up. In this mode, the DQ pin becomes active when the temperature of the DS1821 exceeds the limit programmed into the $T_H$ register, and remains active until the temperature drops below the limit programmed into the $T_L$ register.

The DS1821 uses Maxim's exclusive 1-Wire bus protocol that implements bus communication with one control signal. This system is explained in detail in the 1-Wire BUS SYSTEM section of this datasheet.

## DS1821 BLOCK DIAGRAM Figure 1

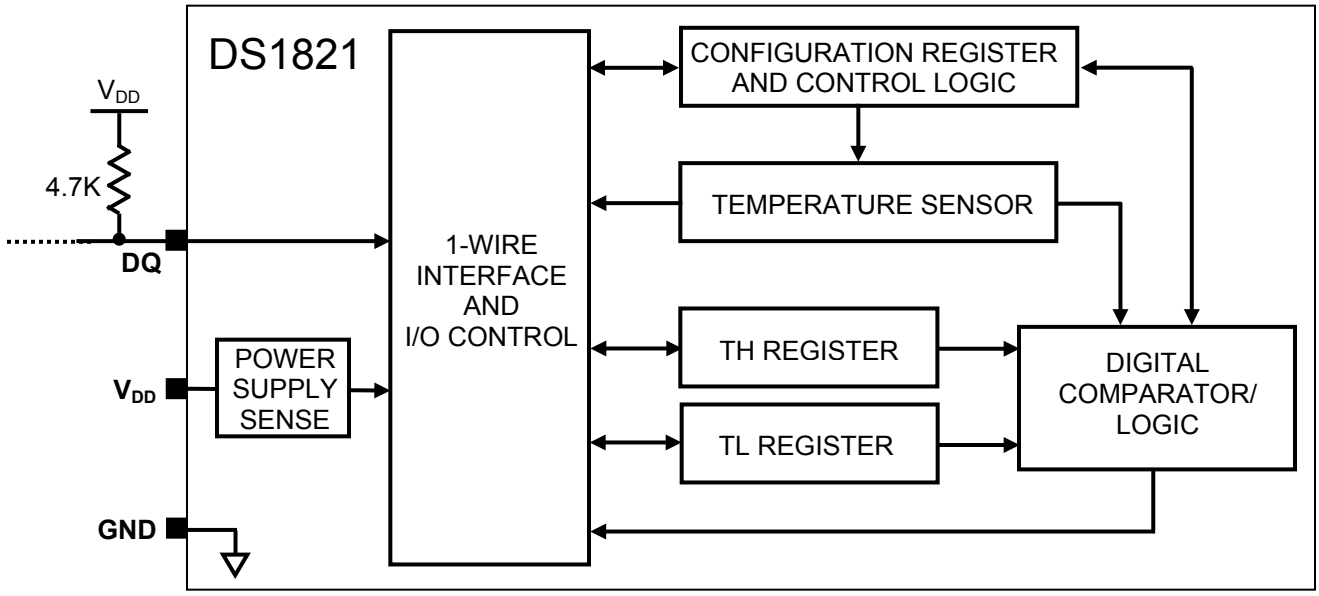


## TEMPERATURE SENSOR FUNCTIONALITY

The core functionality of the DS1821 is its proprietary direct-to-digital temperature sensor, which provides 8-bit (1°C increment) centigrade temperature readings over the range of -55°C to +125°C.

A block diagram of the temperature measurement circuitry is shown in Figure 2. This circuit measures the temperature by counting the number of clock cycles generated by an oscillator with a low temperature coefficient (temp-co) during a gate period determined by a high temp-co oscillator. The low temp-co counter is preset with a base count that corresponds to –55°C. If the counter reaches 0 before the gate period is over, the temperature register, which is preset to –55°C, is incremented by one degree, and the counter is again preset with a starting value determined by the slope accumulator circuitry. The preset counter value is unique for every temperature increment and compensates for the parabolic behavior of the oscillators over temperature.

At this time, the counter is clocked again until it reaches 0. If the gate period is not over when the counter reaches 0, the temperature register is incremented again. This process of presetting the counter, counting down to zero, and incrementing the temperature register is repeated until the counter takes less time to reach zero than the duration of the gate period of the high temp-co oscillator. When this iterative process is complete, the value in the temperature register will indicate the centigrade temperature of the device.

## TEMPERATURE MEASURING CIRCUITRY Figure 2

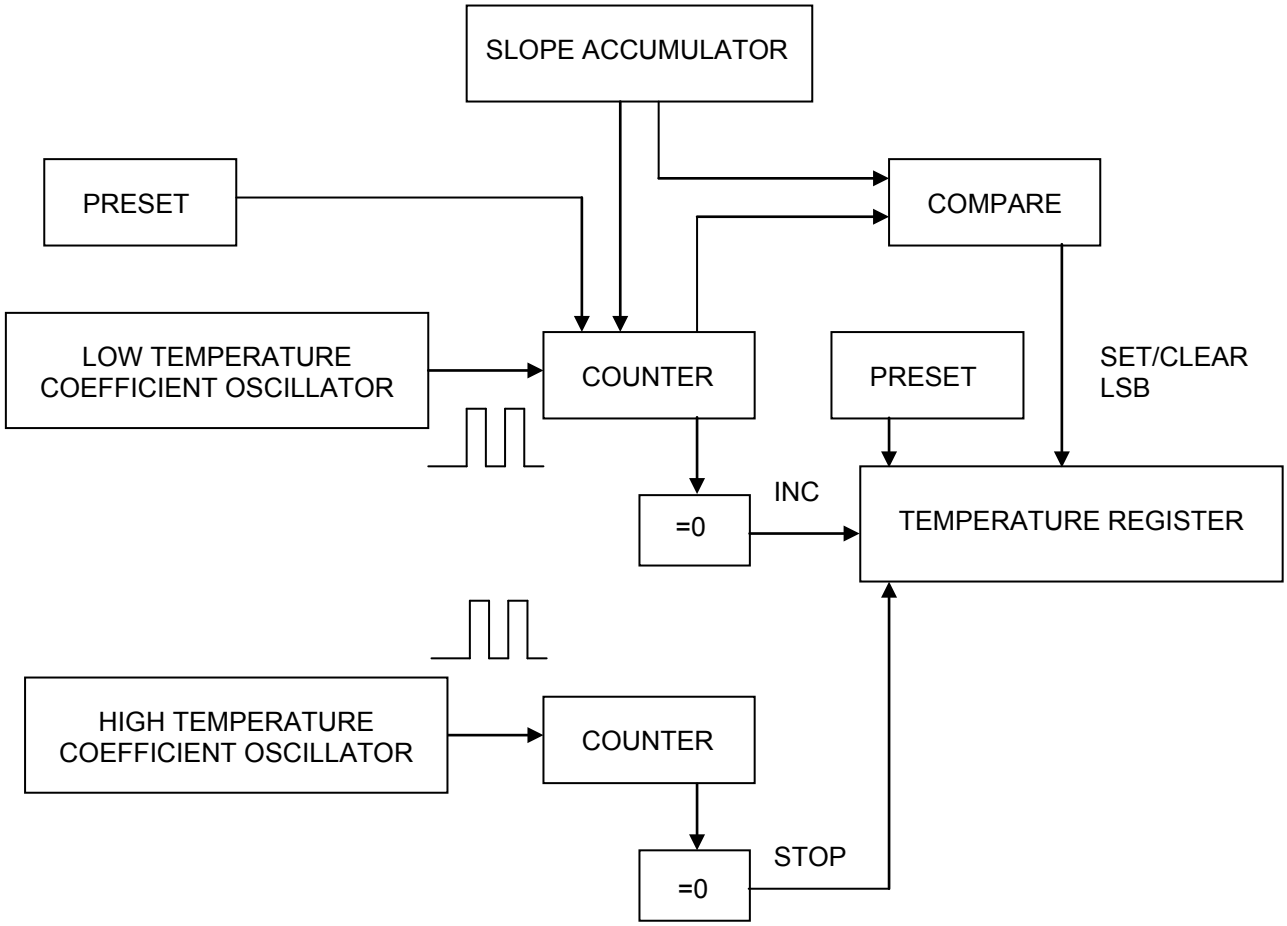


## OPERATING MODES

The DS1821 has two operating modes: 1-Wire mode and thermostat mode. The power-up operating mode is determined by the user-programmable T/$\overline{R}$ bit in the status/configuration register: if T/$\overline{R}$ = 0 the device powers-up in 1-Wire mode, and if T/$\overline{R}$ = 1 the device powers-up in thermostat mode. The T/$\overline{R}$ bit is stored in nonvolatile memory (EEPROM), so it will retain its value when the device is powered down.

## 1-Wire MODE

The DS1821 arrives from the factory in 1-Wire mode (T/$\overline{R}$ = 0). In this mode, the DQ pin of the DS1821 is configured as a 1-Wire port for communication with a microprocessor using the protocols described in the 1-Wire BUS SYSTEM section of this datasheet. These communications can include reading and writing the high and low thermostat trip-point registers ($T_H$ and $T_L$) and the configuration register, and reading the temperature, counter, and slope accumulator registers. Also in this mode, the microprocessor can initiate and stop temperature measurements as described in the OPERATION – MEASURING TEMPERATURE section of this datasheet.

The $T_H$ and $T_L$ registers and certain bits (THF, TLF, T/$\overline{R}$, POL and 1SHOT) in the status/configuration register are stored in nonvolatile EEPROM memory, so they will retain data when the device is powered down. This allows these registers to be pre-programmed when the DS1821 is to be used as a standalone thermostat. Writes to these nonvolatile registers can take up to 10ms. To avoid data corruption, no writes to nonvolatile memory should be initiated while a write to nonvolatile memory is in progress.

Nonvolatile write status can be monitored by reading the NVB bit in the status/configuration register: NVB = 1 – a write to EEPROM memory is in progress, NVB = 0 – nonvolatile memory is idle.

## THERMOSTAT MODE

In thermostat mode (T/$\overline{R}$ = 1), the DS1821 can operate as a standalone thermostat that triggers according to the $T_H$ and $T_L$ trip-points programmed while the device was in 1-Wire mode. In thermostat mode the DS1821 powers-up performing continuous temperature conversions, and the DQ pin acts as the thermostat output. Detailed operation of the thermostat output is provided in the OPERATION – STANDALONE THERMOSTAT section of this datasheet.

Communications can be re-established with the DS1821 while it is in thermostat mode by pulling $V_{DD}$ to 0V while the DQ line is held high, and then toggling the DQ line low 16 times as shown in Figure 12. This temporarily places the DS1821 in 1-Wire mode, allowing microprocessor communication with the DS1821 via the DQ pin. At this time any I/O function can be performed, such as reading/writing the $T_H$, $T_L$ or configuration registers or reading the temperature register. To return to thermostat mode, the same procedure can be performed (pulling $V_{DD}$ to 0V while the DQ line is held high, and then clocking the DQ line 16 times) or the power can be cycled. Note that temporarily putting the DS1821 into 1-Wire mode does not change the power-up mode of the device; this can only be changed by rewriting the T/$\overline{R}$ bit in the status/configuration register. Also note that holding both $V_{DD}$ and DQ low for more than approximately 10 seconds will cause the DS1821 to be powered down.

## OPERATION – MEASURING TEMPERATURE

DS1821 output temperature data is calibrated in degrees centigrade and is stored in two's complement format in the 1-byte (8-bit) temperature register (see Figure 3), which the user can access when the DS1821 is in 1-Wire mode (T/$\overline{R}$ = 0 in the status/configuration register). The sign bit (S) indicates if the temperature is positive or negative; for positive numbers S = 0 and for negative numbers S = 1. Table 2 gives examples of digital output data and the corresponding temperature reading. For Fahrenheit measurements, a lookup table or conversion routine must be used.

The DS1821 can be configured by the user to take continuous temperature measurements (continuous conversion mode) or single measurements (one-shot mode). The desired configuration can be achieved by setting the nonvolatile1SHOT bit in the status/configuration register: 1SHOT = 0 – continuous conversion mode, 1SHOT = 1 – one-shot mode. Note that the 1SHOT setting only controls the operation of the device in 1-Wire mode; in thermostat mode, continuous temperature conversions are started automatically at power-up.

In continuous conversion mode, the Start Convert T [EEh] command initiates continuous temperature conversions, which can be stopped using the Stop Convert T [22h] command. In one-shot mode the Start Convert T [EEh] command initiates a single temperature conversion after which the DS1821 returns to a low-power standby state. In this mode, the microprocessor can monitor the DONE bit in the configuration register to determine when the conversion is complete: DONE = 0 — conversion in progress, DONE = 1 — conversion complete. The DONE bit does not provide conversion status in continuous conversion mode since measurements are constantly in progress (i.e., DONE will always be 0).

## TEMPERATURE, $T_H$ and $T_L$ REGISTER FORMAT Figure 3

| bit 7 | bit 6 | bit 5 | bit 4 | bit 3 | bit 2 | bit 1 | bit 0 |
|---|---|---|---|---|---|---|---|
| S | $2^6$ | $2^5$ | $2^4$ | $2^3$ | $2^2$ | $2^1$ | $2^0$ |

## TEMPERATURE/DATA RELATIONSHIP Table 2

| TEMPERATURE | DIGITAL OUTPUT (Binary) | DIGITAL OUTPUT (Hex) |
|---|---|---|
| +125°C* | 0111 1101 | 7Dh |
| +85°C | 0101 0101 | 55h |
| +25°C | 0001 1001 | 19h |
| 0°C | 0000 0000 | 00h |
| -1°C | 1111 1111 | FFh |
| -25°C | 1110 0111 | E7h |
| -55°C | 1100 1001 | C9h |

## HIGH-RESOLUTION TEMPERATURE READINGS

The user can calculate temperature values with higher than 8-bit resolution using the data remaining in the counter and slope accumulator when the temperature conversion is complete. To do this the user must first read the temperature from the 8-bit temperature register. This value is called TEMP_READ in the high-resolution equation (see Eq. 1). The 9-bit counter value must then be obtained by issuing the Read Counter [A0h] command. This value is the count remaining in the counter at the end of the gate period and is called COUNT_REMAIN in Eq. 1. Next the Load Counter [41h] command must be issued, which loads the 9-bit slope accumulator value into the counter register. The slope accumulator value (called COUNT_PER_C in Eq. 1) can then be read from the counter by again issuing the Read Counter [A0h] command. The slope accumulator value is called "COUNT_PER_C" because it represents the number of counts needed for an accurate measurement at a given temperature (i.e., the counts per degree C). The high-resolution temperature can then be calculated using Eq. 1:

*Eq. 1)*

$$TEMPERATURE = TEMP_READ - 0.5 + \frac{(COUNT_PER_C - COUNT_REMAIN)}{COUNT_PER_C}$$

High-resolution temperature readings cannot be used while in continuous conversion mode. Also, the Read Counter [A0h] and Load Counter [41h] commands must not be used while in continuous conversion mode.

## OPERATION – THERMOSTAT

When the DS1821 is in thermostat mode ($T/\overline{R}$ = 1 in the status/configuration register), temperature conversions are performed continuously beginning at power-up (regardless of the value of the 1SHOT bit), and the DQ pin serves as the thermostat output. The DQ output will become active when the temperature of the DS1821 exceeds the user-defined limit in the $T_H$ register, and will remain active until the temperature drops below the user-defined limit in the $T_L$ register as illustrated in Figure 4. Thus, the user can select $T_H$ and $T_L$ to provide the desired amount of thermostat output hysteresis.

The user-defined 8-bit centigrade trip-point values ($T_H$ and $T_L$) must be stored in two's complement format as shown in Figure 3. The sign bit (S) indicates if the temperature is positive or negative; for positive numbers S = 0 and for negative numbers S = 1. The non-volatile $T_H$ and $T_L$ registers must be programmed when the DS1821 is in 1-Wire mode as explained in the OPERATING MODES section of this datasheet. The DS1821 can be temporarily switched from thermostat mode to 1-Wire mode to change the $T_H$ and $T_L$ values as also explained in the OPERATING MODES section.

The polarity (i.e., the active state) of the DQ output is user-selectable with the nonvolatile POL bit in the status/configuration register. DQ is active-high when POL = 1, and DQ is active-low when POL = 0.

Two bits in the status/configuration register, THF and TLF, provide additional thermostatic information. The value of these bits is normally 0. The THF (temperature high flag) bit will be set to 1 if the measured temperature is ever greater than the value in the $T_H$ register and will remain a 1 until the user rewrites the bit with a 0. The TLF (temperature low flag) bit will be set to 1 if the temperature is ever lower than the value in the $T_L$ register and will remain a 1 until the user rewrites the bit with a 0. These bits provide a record of the device temperature relative to the thermostat trip-points over a period of time. They are stored in nonvolatile memory, so the data stored in THF and TLF can be analyzed after any number of power cycles. The THF and TLF bits function in both 1-Wire and thermostat mode.

## DQ OPERATION IN THERMOSTATE MODE Figure 4

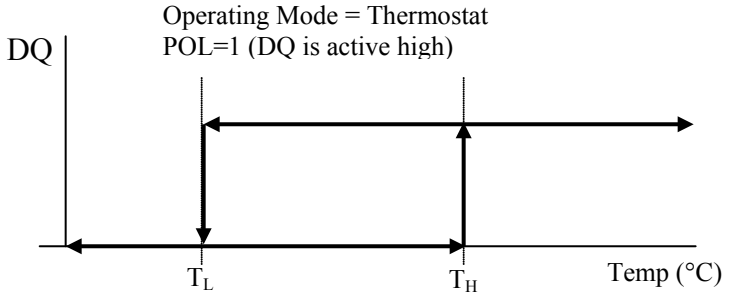


## STATUS/CONFIGURATION REGISTER

The status/configuration register provides information to the user about conversion status, EEPROM activity and thermostat activity. It also allows the user to program various DS1821 options such as power-up operating mode, thermostat output polarity and conversion mode. The status/configuration register is arranged as shown in Figure 5 and detailed descriptions of each bit are provided in Table 3. Note that the THF, TLF $T/\overline{R}$, POL and 1SHOT bits are stored in nonvolatile memory (EEPROM).

## CONFIGURATION REGISTER Figure 5

| bit 7 | bit 6 | bit 5 | bit 4 | bit 3 | bit 2 | bit 1 | bit 0 |
|---|---|---|---|---|---|---|---|
| DONE | 1 | NVB | THF* | TLF* | $T/\overline{R}$* | POL* | 1SHOT* |

*Stored in EEPROM

## CONFIGURATION REGISTER BIT DESCRIPTIONS Table 3

| Bit Name (User Access) | Functional Description |
|---|---|
| DONE — Temperature Conversion Done (Read Only) | DONE = 0 — Temperature conversion is in progress.<br>DONE = 1 — Temperature conversion is complete.<br>NOTE: DONE = 0 at POR. |
| NVB — Non-volatile Memory Busy (Read Only) | NVB = 0 — Nonvolatile memory is not busy.<br>NVB = 1 — A write to EEPROM memory is in progress |
| THF* — Temperature High Flag (Read/Write) | THF = 0 — The measured temperature has not exceeded the value stored in the $T_H$ register.<br>THF = 1 — At some point in time the measured temperature has been higher than the value stored in the $T_H$ register. THF will remain a 1 until it is over-written with a 0 by the user. |
| TLF* — Temperature Low Flag (Read/Write) | TLF = 0 — The measured temperature has not been lower than the value stored in the $T_L$ register.<br>TLF = 1 — At some point in time the measured temperature has been lower than the value stored in the $T_L$ register. TLF will remain a 1 until it is over-written with a 0 by the user. |
| $T/\overline{R}$* — Power-up Operating Mode (Read/Write) | $T/\overline{R}$ = 0 — DS1821 powers up in 1- wire mode.<br>$T/\overline{R}$ = 1 — DS1821 powers up in thermostat mode. |
| POL* — Thermostat Output (DQ) Polarity (Read/Write) | POL = 0 — Thermostat output (DQ) is active low.<br>POL = 1 — Thermostat output (DQ) is active high. |
| 1SHOT* — Conversion Mode (Read/Write) | 1SHOT = 0 — Continuous conversion mode. The Start Convert T [EEh] command initiates continuous temperature conversions, which can be stopped with the Stop Convert T [22h] command.<br>1SHOT = 1 — One-shot mode. The Start Convert T [EEh] command initiates a single temperature conversion after which the DS1821 returns to a low-power standby state. |

*Stored in EEPROM

## 1-Wire BUS SYSTEM

The 1-Wire bus system uses a single bus master (i.e., a microprocessor) to control slave devices. The DS1821 functions as a slave device when it is used in 1-Wire mode; however, since the DS1821 is not addressable or multi-droppable, a single 1-Wire-mode DS1821 must be the only slave device on the bus. All data and commands are transmitted least significant bit first over the 1-Wire bus.

The following discussion of the 1-Wire bus system is broken down into three topics: hardware configuration, transaction sequence, and 1-Wire signaling (signal types and timing).

## HARDWARE CONFIGURATION

The 1-Wire bus has by definition only a single data line. Each device (in this case, the master and one DS1821) interfaces to the data line via an open drain or 3–state port. This allows each device to "release" the data line when the device is not transmitting data so that the bus is available for use by the other device. The 1-Wire port of the DS1821 (the DQ pin) is open drain with an internal circuit equivalent to that shown in Figure 6.

The 1-Wire bus requires an external pullup resistor of approximately 5 kΩ; thus, the idle state for the 1-Wire bus is high. If for any reason a transaction needs to be suspended, the bus MUST be left in the idle state if the transaction is to resume. Infinite recovery time can occur between bits so long as the 1-Wire bus is in the inactive (high) state during the recovery period. If the bus is held low for more than 480 µs, the DS1821 will be reset.

## HARDWARE CONFIGURATION Figure 6

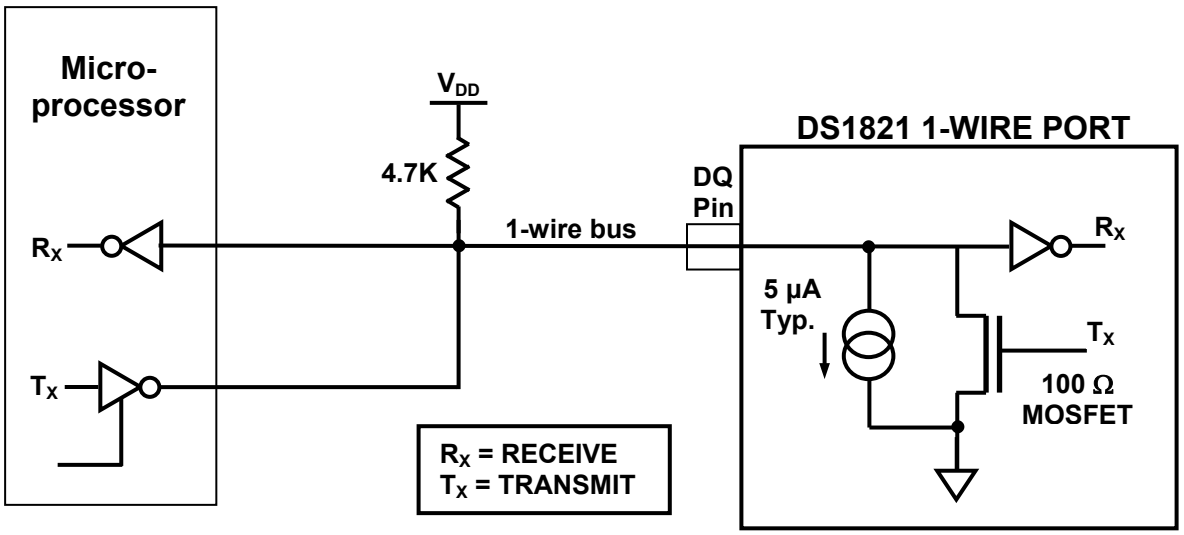


## TRANSACTION SEQUENCE

The transaction sequence for accessing the DS1821 via the 1-Wire port is as follows:

- Initialization
- DS1821 Function Command
- Data Transmitted/Received

## INITIALIZATION

All transactions on the 1-Wire bus begin with an initialization sequence. The initialization sequence consists of a reset pulse transmitted by the bus master followed by a presence pulse transmitted by the DS1821. The presence pulse lets the bus master know that the DS1821 is on the bus and ready to operate. Timing for the reset and presence pulses is detailed in the 1-Wire SIGNALING section.

## DS1821 FUNCTION COMMANDS

The DS1821 function commands in this section allow the master to communicate with and configure the DS1821. The DS1821 function commands are summarized in Table 4.

### READ TEMPERATURE [AAh]

Provides read access to the 1-byte temperature register.

### START CONVERT T [EEh]

Initiates temperature conversions. If the part is in one-shot mode (1SHOT = 1), only one conversion will be performed. If it is in continuous mode (1SHOT = 0), continuous conversions will be performed until a Stop Convert T command is received.

### STOP CONVERT T [22h]

Stops temperature conversions when the device is in continuous conversion mode (1SHOT = 0). This opcode has no function if the device is in one-shot mode (1SHOT = 1).

### WRITE TH [01h]
### WRITE TL [02h]

Provides write access to the 8-bit $T_H$ and $T_L$ registers, respectively.

### READ TH [A1h]
### READ TL [A2h]

Provides read access to the 8-bit $T_H$ and $T_L$ registers, respectively.

### WRITE STATUS [0Ch]

Provides write access to the 8-bit status/configuration register.

### READ STATUS [ACh]

Provides read access to the 8-bit status/configuration register.

### READ COUNTER [A0h]

Provides read access to data in the 9-bit counter register for use in high-resolution temperature calculations. This is explained in detail in the HIGH-RESOLUTION TEMPERATURE READINGS section.

### LOAD COUNTER [41h]

Loads the 9-bit data from the slope accumulator register into the counter register so that it can be accessed using the Read Counter [A0h] command. Use of the Load Counter command is explained in detail in the HIGH-RESOLUTION TEMPERATURE READINGS section.

## DS1821 FUNCTION COMMAND SET Table 4

| Command | Description | Protocol | 1-Wire Bus Activity After Command is Issued |
|---|---|---|---|
| **TEMPERATURE CONVERSION COMMANDS** | | | |
| Read Temperature | Reads last converted temperature value from temperature register. | AAh | Master receives 8-bit temperature value from DS1821. |
| Start Convert T | Initiates temperature conversions. | EEh | None |
| Stop Convert T | Halts temperature conversions. | 22h | None |
| **THERMOSTAT and STATUS/CONFIGURATION COMMANDS** | | | |
| Write TH | Writes data to the $T_H$ register. | 01h | Master transmits 8-bit $T_H$ value to DS1821. |
| Write TL | Writes data to the $T_L$ register. | 02h | Master transmits 8-bit $T_L$ value to DS1821. |
| Read TH | Reads data from the $T_H$ register. | A1h | Master receives 8-bit $T_H$ value from DS1821. |
| Read TL | Reads data from the $T_L$ register. | A2h | Master receives 8-bit $T_L$ value from DS1821. |
| Write Status | Writes data to the status/configuration register. | 0Ch | Master transmits 8-bit status/configuration value to DS1821. |
| Read Status | Reads data from the status/configuration register. | ACh | Master receives 8-bit status/configuration value from DS1821. |
| **HIGH-RESOLUTION COMMANDS** | | | |
| Read Counter | Reads data from the counter register | A0h | Master receives 9-bit counter value from DS1821. |
| Load Counter | Loads slope accumulator data into the counter register | 41h | None |

## 1-Wire SIGNALING

The DS1821 uses a strict 1-Wire communication protocol to insure data integrity. Several signal types are defined by this protocol: reset pulse, presence pulse, write 0, write 1, read 0, and read 1. All of these signals, with the exception of the presence pulse, are initiated by the bus master.

## INITIALIZATION PROCEDURE: RESET AND PRESENCE PULSES

All communication with the DS1821 begins with an initialization sequence that consists of a reset pulse from the master followed by a presence pulse from the DS1821. This is illustrated in Figure 7. When the DS1821 sends the presence pulse in response to the reset, it is indicating to the master that it is on the bus and ready to operate given an appropriate function command.

During the initialization sequence the bus master transmits ($T_X$) the reset pulse by pulling the 1-Wire bus low for a minimum of 480 µs. The bus master then releases the bus and goes into receive mode ($R_X$). When the bus is released, the 5k pullup resistor pulls the 1-Wire bus high. When the DS1821 detects this rising edge, it waits 15–60 µs and then transmits a presence pulse by pulling the 1-Wire bus low for 60–240 µs.

## INITIALIZATION TIMING Figure 7

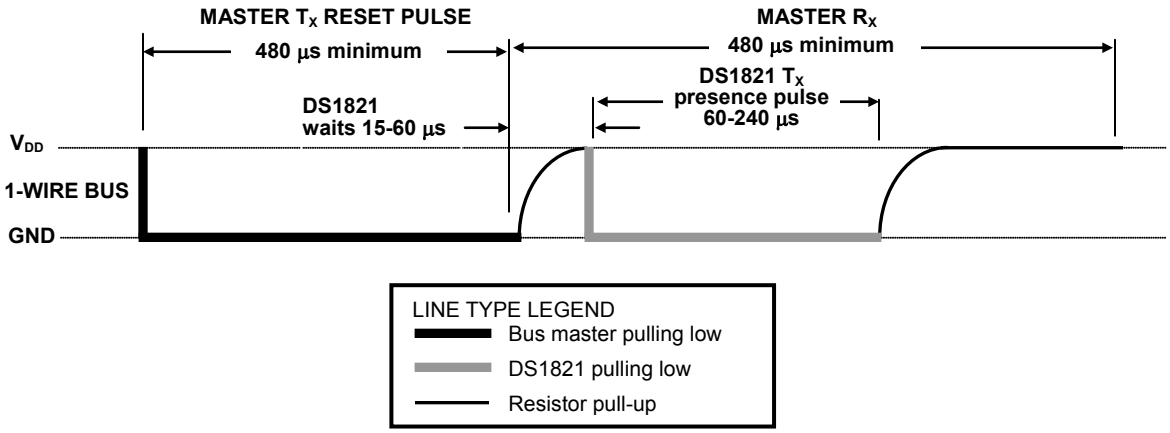


## READ/WRITE TIME SLOTS

The bus master writes data to the DS1821 during write time slots and reads data from the DS1821 during read time slots. One bit of data is transmitted over the 1-Wire bus per time slot.

## WRITE TIME SLOTS

There are two types of write time slots: "Write 1" time slots and "Write 0" time slots. The bus master uses a Write 1 time slot to write a logic 1 to the DS1821 and a Write 0 time slot to write a logic 0 to the DS1821. All write time slots must be a minimum of 60 µs in duration with a minimum of a 1 µs recovery time between individual write slots. Both types of write time slots are initiated by the master pulling the 1-Wire bus low (see Figure 8).

To generate a Write 1 time slot, after pulling the 1-Wire bus low, the bus master must release the 1-Wire bus within 15 µs. When the bus is released, the 5k pullup resistor will pull the bus high. To generate a Write 0 time slot, after pulling the 1-Wire bus low, the bus master must continue to hold the bus low for the duration of the time slot (at least 60 µs).

The DS1821 samples the 1-Wire bus during a window that lasts from 15 µs to 60 µs after the master initiates the write time slot. If the bus is high during the sampling window, a 1 is written to the DS1821. If the line is low, a 0 is written to the DS1821.

## READ TIME SLOTS

The DS1821 can only transmit data to the master when the master issues read time slots. Therefore, the master must generate read time slots immediately after issuing a read command (e.g., Read Temperature [AAh]), so that the DS1821 can provide the requested data. All read time slots must be a minimum of 60 µs in duration with a minimum of a 1 µs recovery time between slots. A read time slot is initiated by the master device pulling the 1-Wire bus low for a minimum of 1 µs and then releasing the bus (see Figure 8). After the master initiates the read time slot, the DS1821 will begin transmitting a 1 or 0 on the bus. The DS1821 transmits a 1 by leaving the bus high and transmits a 0 by pulling the bus low. When transmitting a 0, the DS1821 will release the bus by the end of the time slot, and the bus will be pulled back to its high idle state by the pullup resister. Output data from the DS1821 is valid for 15 µs after the falling edge that initiated the read time slot. Therefore, the master must release the bus and then sample the bus state within 15 µs from the start of the slot.

Figure 9 illustrates that the sum of $T_{INIT}$, $T_{RC}$, and $T_{SAMPLE}$ must be less than 15 µs for a read time slot. Figure 10 shows that system timing margin is maximized by keeping $T_{INIT}$ and $T_{RC}$ as short as possible and by locating the master sample time during read time slots towards the end of the 15 µs period.

## READ/WRITE TIME SLOT TIMING DIAGRAM Figure 8

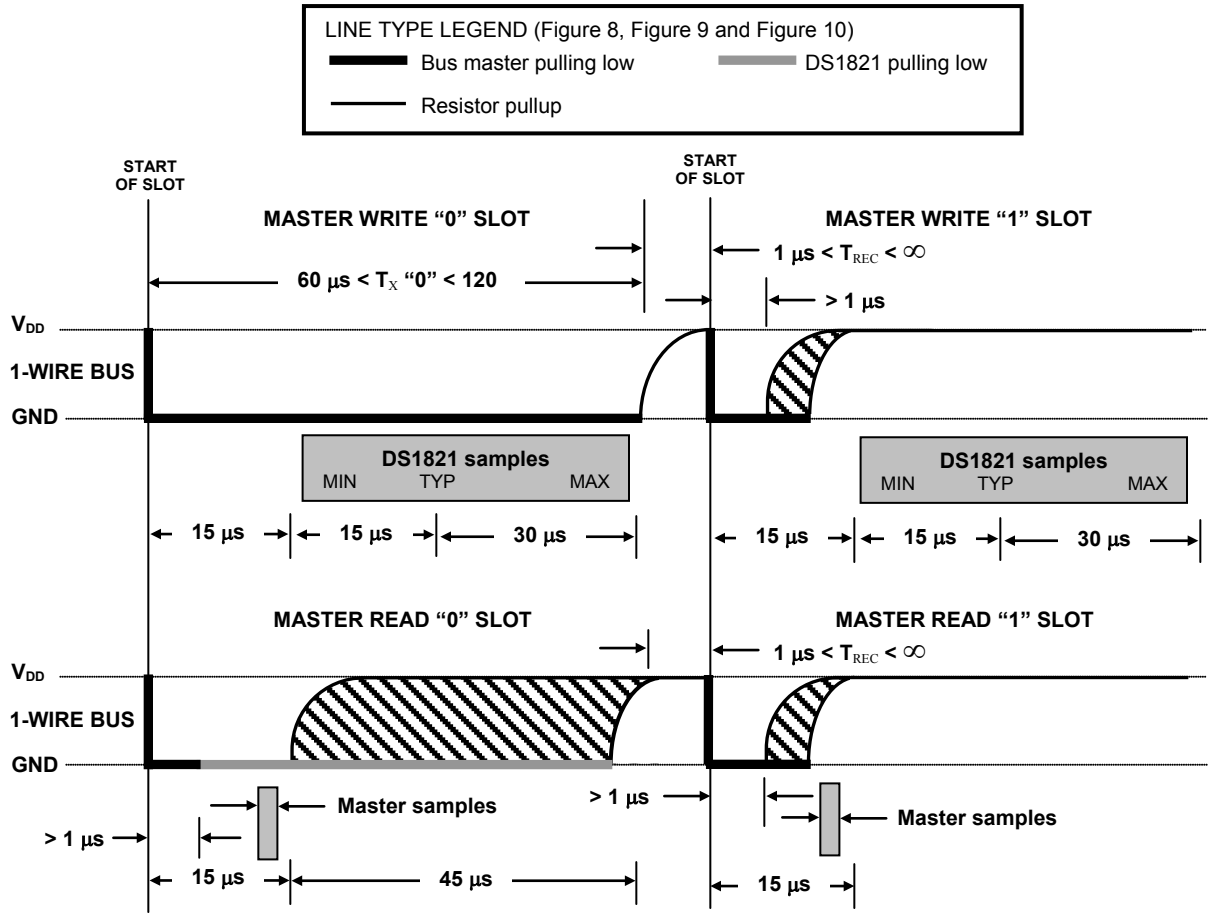


## DETAILED MASTER READ 1 TIMING Figure 9

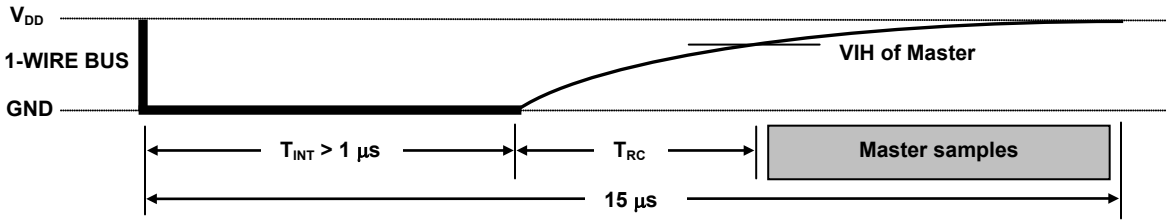


## RECOMMENDED MASTER READ 1 TIMING Figure 10

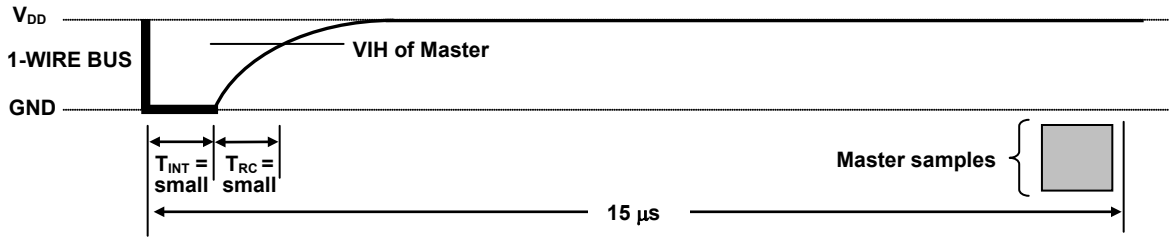

## DS1821 OPERATION EXAMPLE

In this example, the master device programs the DS1821 with $T_L$ = +10°C and $T_H$ = +40°C and verifies that the data has been saved correctly. The master then programs the status/configuration register so that the device will power-up in thermostat mode ($T/\overline{R}$ = 1) and the thermostat output will have active high polarity (POL = 1).

| MASTER MODE | DATA (LSB FIRST) | COMMENTS |
|---|---|---|
| TX | Reset | Master issues reset pulse. |
| RX | Presence | DS1821 responds with presence pulse. |
| TX | 01h | Master issues Write TH command. |
| TX | 28h | Master sends data for $T_H$ = +40°C. |
| TX | Reset | Master issues reset pulse. |
| RX | Presence | DS1821 responds with presence pulse. |
| TX | 02h | Master issues Write TL command. |
| TX | 0Ah | Master sends data for $T_L$ = +10°C. |
| TX | Reset | Master issues reset pulse. |
| RX | Presence | DS1821 responds with presence pulse. |
| TX | A1h | Master issues Read TH command. |
| RX | 28h | Master reads stored $T_H$ value to verify data. |
| TX | Reset | Master issues reset pulse. |
| RX | Presence | DS1821 responds with presence pulse. |
| TX | A2h | Master issues Read TL command. |
| RX | 0Ah | Master reads stored $T_L$ value to verify data. |
| TX | Reset | Master issues reset pulse. |
| RX | Presence | DS1821 responds with presence pulse. |
| TX | 0Ch | Master issues Write Status command. |
| TX | 06h | Master sends status/configuration data to the DS1821 with $T/\overline{R}$ = 1 (thermostat mode at power-up) and POL = 1 (active high thermostat output). |
| — | — | Power is cycled; DS1821 powers-up in thermostat mode. |

## ABSOLUTE MAXIMUM RATINGS

| | |
|---|---|
| Voltage on Any Pin Relative to ground | –0.5V to +7.0V |
| Operating Temperature Range | –55°C to +125°C |
| Storage Temperature Range | –55°C to +125°C |
| Soldering Temperature (reflow, SO) | +260°C |
| (wave, TO92) | +250°C |
| Lead Temperature (soldering, 10s) | +300°C |

*These are stress ratings only and functional operation of the device at these or any other conditions above those indicated in the operation sections of this specification is not implied. Exposure to absolute maximum rating conditions for extended periods of time may affect reliability.*

## DC ELECTRICAL CHARACTERISTICS (-55°C to +125°C; $V_{DD}$=2.7V to 5.5V)

| PARAMETER | SYMBOL | CONDITION | MIN | TYP | MAX | UNITS | NOTES |
|---|---|---|---|---|---|---|---|
| Supply Voltage | $V_{DD}$ | | +2.7 | | +5.5 | | 1 |
| Thermometer Error | $t_{ERR}$ | 0°C to +85°C<br>$V_{DD}$ = 3.6V to 5.5V | | | ±1 | °C | 2,3,4 |
| | | -55°C to +125°C<br>$V_{DD}$ = 3.6V to 5.5V | | See Typical Curve (Figure 11) | | | |
| DQ Logic Low | $V_{IL}$ | | -0.3 | | +0.8 | V | 1,5 |
| DQ Logic High | $V_{IH}$ | | +2 | | The lower of +5.5 or $V_{DD}$ + 0.3 | V | 1,6 |
| Sink Current | $I_L$ | $V_{DQ}$ = 0.4V<br>$V_{DD}$ = 3.6V to 5.5V | 4 | | | mA | 1 |
| Standby Current | $I_Q$ | -55°C to +85°C | | 1 | 3 | µA | 7 |
| Active Current | $I_{DD}$ | $V_{DD}$= 5V | | 500 | 1000 | µA | 8 |
| DQ Input Current | $I_{DQ}$ | | | 5 | | µA | 9 |

## NOTES:

1. All voltages are referenced to ground.
2. Thermometer error reflects the sensor accuracy as tested during calibration.
3. See typical performance curve in Figure 11 for specification limits outside the 0°C to +85°C range.
4. For T<0°C, accuracy degrades by 0.5°C/V for $V_{DD}$<4.3V.
5. Logic low voltages are specified at a sink current of 4 mA.
6. Logic high voltages are specified at a source current of 1 mA.
7. Standby current is typically 5 µA at 125°C.
8. Active current refers to supply current during active temperature conversions or EEPROM writes.
9. DQ line is high (“hi-Z” state).

## AC ELECTRICAL CHARACTERISTICS: (-55°C to +125°C; $V_{DD}$=3.6V to 5.5V)

| PARAMETER | SYMBOL | MIN | TYP | MAX | UNITS | NOTES |
|---|---|---|---|---|---|---|
| Temperature Conversion Time | $t_{CONV}$ | | 0.4 | 1.0 | s | |
| EEPROM Write Time | $t_{WR}$ | | 10 | 50 | ms | |
| Time Slot | $t_{SLOT}$ | 60 | | 120 | µs | 1 |
| Recovery Time | $t_{REC}$ | 1 | | | µs | 1 |
| Write 0 Low Time | $t_{LOW0}$ | 60 | | 120 | µs | 1 |
| Write 1 Low Time | $t_{LOW1}$ | 1 | | 15 | µs | 1 |
| Read Data Valid | $t_{RDV}$ | | | 15 | µs | 1 |
| Reset Time High | $t_{RSTH}$ | 480 | | | µs | 1 |
| Reset Time Low | $t_{RSTL}$ | 480 | | | µs | 1,2 |
| Presence Detect High | $t_{PDHIGH}$ | 15 | | 60 | µs | 1 |
| Presence Detect Low | $t_{PDLOW}$ | 60 | | 240 | µs | 1 |
| $V_{DD}$ Low to Mode Toggle Clock Low | $t_{PC}$ | 100 | | | ns | 1,3 |
| Mode Toggle Clock 16 High to $V_{DD}$ High | $t_{CP}$ | 100 | | | ns | 1 |
| Mode Toggle Clock Pulse Low Time | $t_{CL}$ | 0.1 | | 10 | µs | 1 |
| Mode Toggle Clock Pulse High Time | $t_{CH}$ | 0.1 | | | µs | 1 |
| Mode Toggle Clock High-to-Low or Low-to-High Transition Time | $t_T$ | | | 100 | ns | 1 |
| Capacitance | $C_{IN/OUT}$ | | | 25 | pF | |

## NOTES:

1. Refer to timing diagrams in Figure 13.
2. If $t_{RSTL}$ > 960 µs, a power-on-reset may occur.
3. Time required for part to disable thermostat output.

## TYPICAL PERFORMANCE CURVE Figure 11

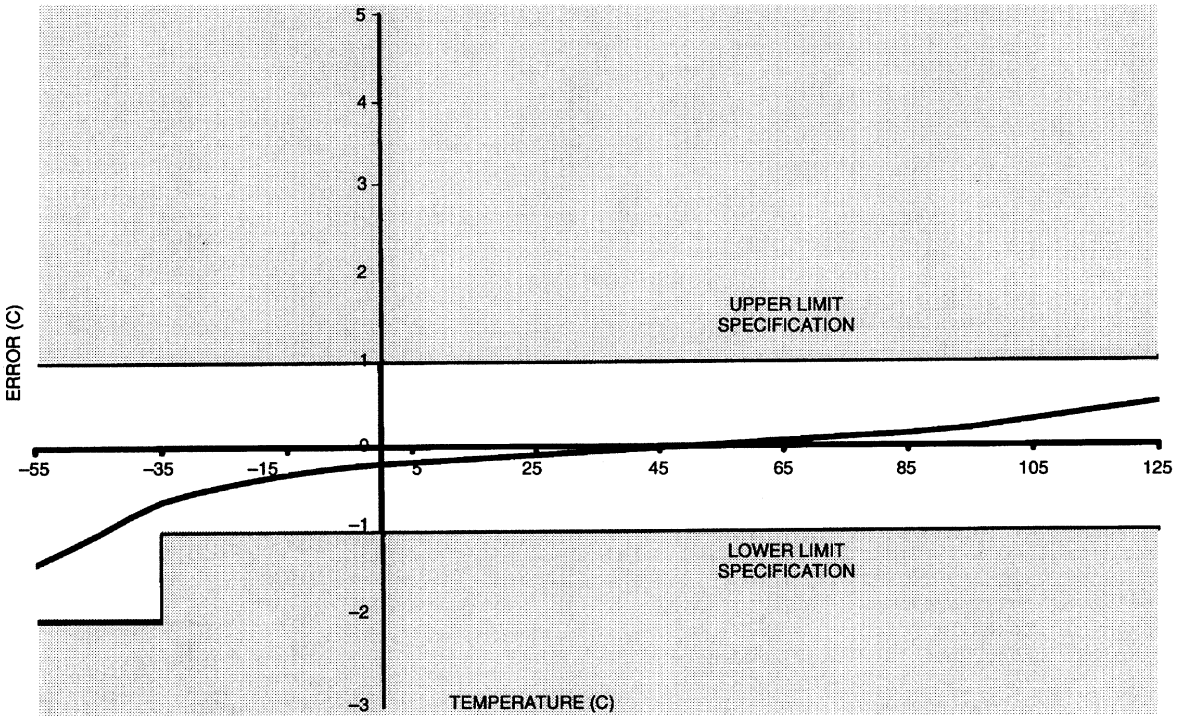


## MODE TOGGLE TIMING WHEN T/$\overline{R}$ = 1 Figure 12

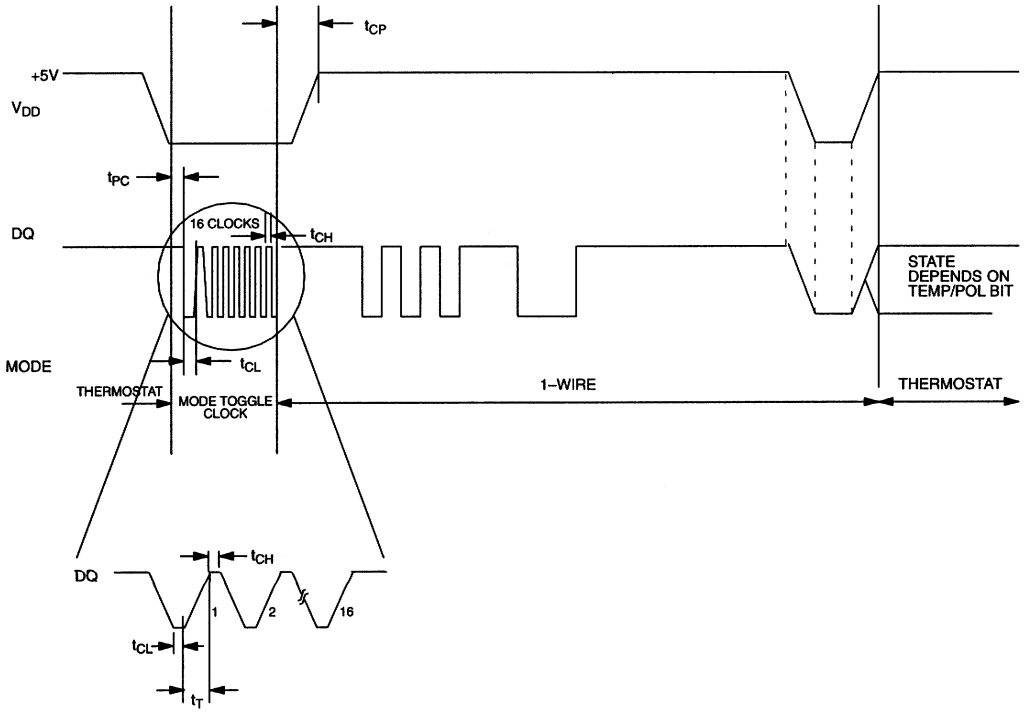

## TIMING DIAGRAMS Figure 13

### 1–WIRE WRITE ZERO TIME SLOT

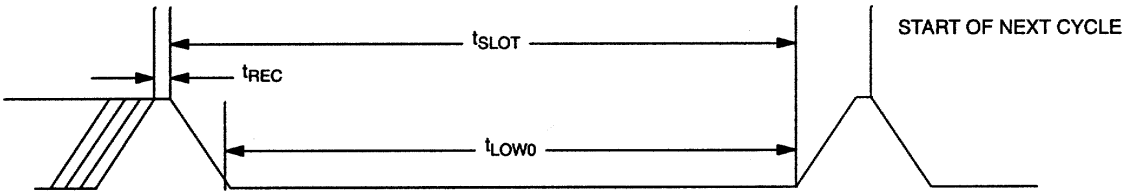


### 1–WIRE READ ZERO TIME SLOT

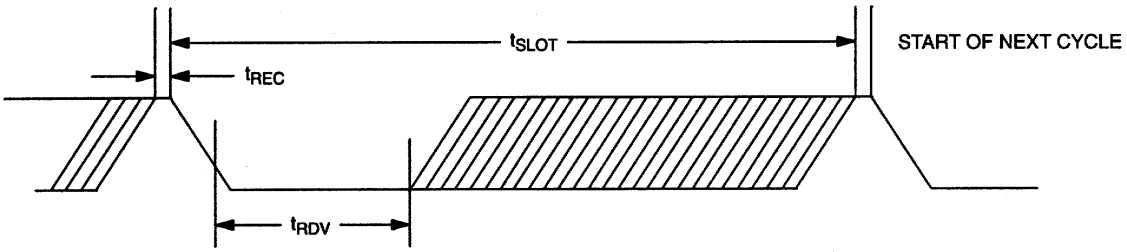


### 1–WIRE RESET PULSE

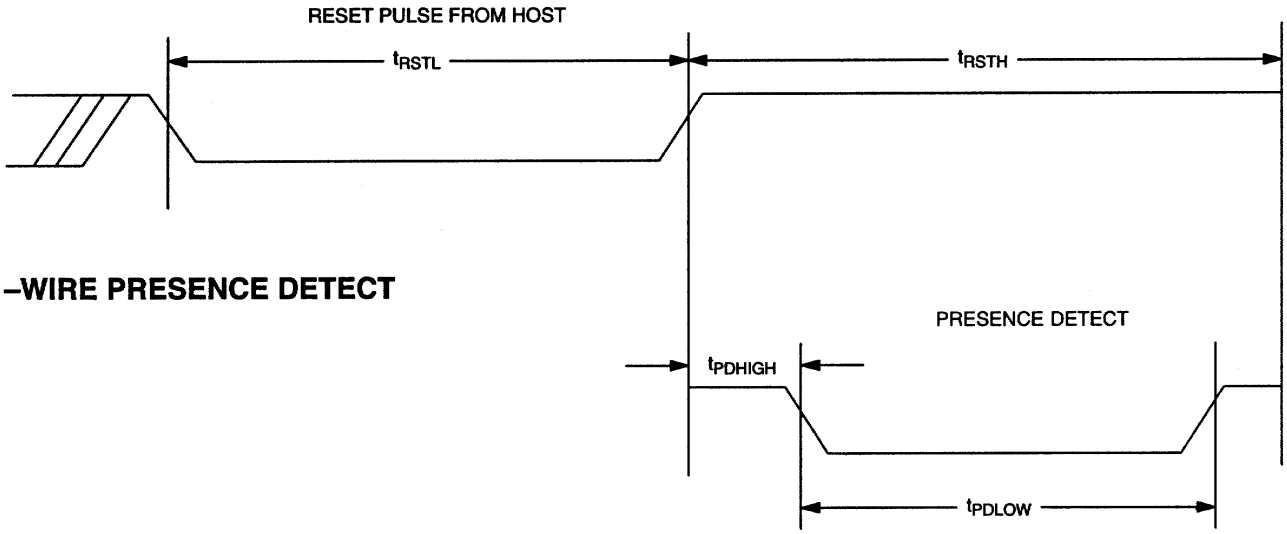


### 1–WIRE PRESENCE DETECT

## PACKAGE INFORMATION

For the latest package outline information and land patterns (footprints), go to **www.maxim-ic.com/packages**. Note that a "+", "#", or "-" in the package code indicates RoHS status only. Package drawings may show a different suffix character, but the drawing pertains to the package regardless of RoHS status.

| PACKAGE TYPE | PACKAGE CODE | OUTLINE NO. | LAND PATTERN NO. |
|---|---|---|---|
| 3 TO92 | Q3+1 | 21-0248 | — |
| 8 SO | W8+4 | 21-0262 | 90-0258 |

## REVISION HISTORY

| REVISION NUMBER | REVISION DATE | DESCRIPTION | PAGES CHANGED |
|---|---|---|---|
| 0 | 6/12 | Replaced the PR35 package with the TO92 package; updated the *Ordering Information* table; updated the soldering information in the *Absolute Maximum Ratings* section | 1, 2, 15 |



*Maxim cannot assume responsibility for use of any circuitry other than circuitry entirely embodied in a Maxim product. No circuit patent licenses are implied. Maxim reserves the right to change the circuitry and specifications without notice at any time.*

***Maxim Integrated Products, Inc. 160 Rio Robles, San Jose, CA 95134 USA 1-408-601-1000***

© 2012 Maxim Integrated Products Maxim is a registered trademark of Maxim Integrated Products, Inc.

Компания «ЭлектроПласт» предлагает заключение долгосрочных отношений при поставках импортных электронных компонентов на взаимовыгодных условиях!

Наши преимущества:

- Оперативные поставки широкого спектра электронных компонентов отечественного и импортного производства напрямую от производителей и с крупнейших мировых складов;
- Поставка более 17-ти миллионов наименований электронных компонентов;
- Поставка сложных, дефицитных, либо снятых с производства позиций;
- Оперативные сроки поставки под заказ (от 5 рабочих дней);
- Экспресс доставка в любую точку России;
- Техническая поддержка проекта, помощь в подборе аналогов, поставка прототипов;
- Система менеджмента качества сертифицирована по Международному стандарту ISO 9001;
- Лицензия ФСБ на осуществление работ с использованием сведений, составляющих государственную тайну;
- Поставка специализированных компонентов (Xilinx, Altera, Analog Devices, Intersil, Interpoint, Microsemi, Aeroflex, Peregrine, Syfer, Eurofarad, Texas Instrument, Miteq, Cobham, E2V, MA-COM, Hittite, Mini-Circuits,General Dynamics и др.);

Помимо этого, одним из направлений компании «ЭлектроПласт» является направление «Источники питания». Мы предлагаем Вам помощь Конструкторского отдела:

- Подбор оптимального решения, техническое обоснование при выборе компонента;
- Подбор аналогов;
- Консультации по применению компонента;
- Поставка образцов и прототипов;
- Техническая поддержка проекта;
- Защита от снятия компонента с производства.

**Как с нами связаться**

**Телефон:** 8 (812) 309 58 32 (многоканальный)
**Факс:** 8 (812) 320-02-42
**Электронная почта:** org@eplast1.ru
**Адрес:** 198099, г. Санкт-Петербург, ул. Калинина, дом 2, корпус 4, литера А.