RoHS Available

Axial-Leaded 1.5 Watt Glass Zener Diodes

Screening in reference to MIL-PRF-19500 available

DESCRIPTION

The 1N5913BG-5956BG series of 1.5 watt Zeners provides voltage regulation in a selection from 3.3 to 200 volts with a variety of tolerances available. They are also available in various military equivalent screening levels for high reliability. These glass encapsulated Zeners with a G suffix provide hermetic-sealed qualities and higher rated temperature beyond that optionally provided in equivalent plastic-body constructions (P suffix) for the same JEDEC part numbers. Both package options are available from Microsemi.

Important: For the latest information, visit our website http://www.microsemi.com.

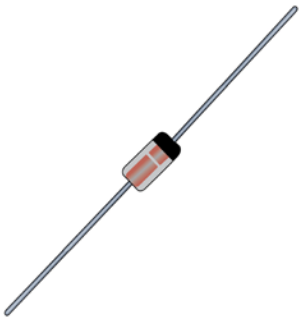

DO-41 (DO-204AL) Package

Also available in:

DO-213AB package
(MELF surface mount)
1N5913BUR-1 – 1N5956BUR-1

SMB package
(tabbed surface mount)
SMBG(J)5913B – SMBG(J)5956B

SMAJ package
(tabbed surface mount)
SMAJ5913B – SMAJ5956B

Powermite package
(tabbed surface mount)
1PMT5913B – 1PMT5956B

FEATURES

- JEDEC registered 1N5913B TO 1N5956B number series.
- Zener voltage available 3.3 V to 200 V.
- Voltage tolerances of 10%, 5%, 2% and 1% are available.
- Screening in reference to MIL-PRF-19500 is available.
  (See part nomenclature for all available options.)
- RoHS compliant versions available (commercial grade only).
- Optional plastic body axial-leaded Zeners available as 1N5913BP – 1N5956BP.
  (See separate data sheet)

APPLICATIONS / BENEFITS

- Regulates voltage over a broad range of operating current and temperature.
- Flexible axial-lead mounting terminals.
- Metallurgically enhanced internal contact design for greater reliability and lower thermal resistance in glass hermetically sealed package
- Non-sensitive to ESD per MIL-STD-750 method 1020.
- Hermetically sealed glass body construction.
- Inherently radiation hard as described in Microsemi MicroNote 050.

MAXIMUM RATINGS @ T_A= 25 °C unless otherwise specified

Parameters/Test Conditions	Symbol	Value	Unit
Junction and Storage Temperature	T_J & T_{STG}	-65 to +175	°C
Thermal Resistance Junction-to-Lead @ 3/8 inch (10 mm) lead length from body	$R_{\Theta JL}$	60	°C/W
Thermal Resistance Junction-to-Ambient (1)	$R_{\Theta JA}$	120	°C/W
Steady State Power Dissipation @ T_L ≤ 85 ºC (2) @ T_A = 25 ºC (1)	P_D	1.5 1.25	W
Rated Average Power Dissipation (also see figure 1)	$P_{M(AV)}$	1.5	W
Forward Voltage @ 200 mA	V_F	1.2	V
Solder Temperature @ 10 s	T_{SP}	260	°C

Notes: 1. When mounted on FR4 PC board (1 oz Cu) with 4 mm^2 copper pads and track width 1 mm, length 25 mm..
2. At 3/8 inch (10 mm) lead length from body.

MSC – Lawrence
6 Lake Street, Lawrence, MA 01841
Tel: 1-800-446-1158 or (978) 620-2600
Fax: (978) 689-0803

MSC – Ireland
Gort Road Business Park, Ennis, Co. Clare, Ireland
Tel: +353 (0) 65 6840044
Fax: +353 (0) 65 6822298

Website:
www.microsemi.com

©2013 Microsemi Corporation

MECHANICAL and PACKAGING

- CASE: Hermetically sealed voidless hard glass with tungsten slugs.
- TERMINALS: Tin/lead or RoHS compliant matte/tin over copper. Solderable per MIL-STD-750, method 2026.
- MARKING: Part number.
- POLARITY: Cathode indicated by band. Diode to be operated with the banded end positive with respect to the opposite end for Zener regulation.
- TAPE & REEL option: Standard per EIA-296 (add TR suffix to part number). Consult factory for quantities.
- WEIGHT: Approximately 340 milligrams.
- See package dimensions on last page.

PART NOMENCLATURE

MQ 1N5913 B G (e3)

Reliability Level*
MQ
MX
MV
MSP
Blank = Commercial
*(refer to MicroNote 129)

JEDEC type number
(See Electrical Characteristics table)

RoHS Compliance
e3 = RoHS compliant
Blank = non-RoHS compliant

Glass Casing

Tolerance Level
A = 10 %
B = 5 %
C = 2 %
D = 1%

SYMBOLS & DEFINITIONS

Symbol	Definition
V_Z	Zener Voltage: The Zener voltage the device will exhibit at a specified current (I_Z) in its breakdown region.
I_Z, I_{ZT}, I_{ZK}	Regulator Current: The dc regulator current (I_Z), at a specified test point (I_{ZT}), near breakdown knee (I_{ZK}).
Z_{ZT} or Z_{ZK}	Regulator Impedance: The small signal impedance of the diode when biased to operate in its breakdown region with I_{ZT} applied at I_Z or I_{ZK} respectively. This has also been known as Zener or dynamic impedance (Z_{ZT} or Z_{ZK}).
V_F	Forward Voltage: The positive dc anode-cathode voltage the device will exhibit at a specified forward current.
I_R	Reverse Current: The dc current flowing from the external circuit into the cathode terminal at the specified voltage V_R.
I_{ZM}	Maximum Regulator (Zener) Current: The maximum rated dc current for the specified power rating.

©2013 Microsemi Corporation

ELECTRICAL CHARACTERISTICS @ T_L = 30 ºC

JEDEC TYPE NUMBER	ZENER VOLTAGE V_Z	TEST CURRENT I_{ZT}	MAXIMUM DYNAMIC IMPEDANCE Z_{ZT} (Note 2)	KNEE CURRENT I_{ZK}	MAXIMUM KNEE IMPEDANCE Z_{ZK} (Note 2)	MAXIMUM REVERSE CURRENT I_R @ V_R	REVERSE VOLTAGE V_R	MAX. DC CURRENT I_{ZM}
	Volts	mA	Ohms	mA	Ohms	µA	Volts	mA
1N5913BG	3.3	113.6	10	1.0	500	100	1.0	454
1N5914BG	3.6	104.2	9.0	1.0	500	75	1.0	416
1N5915BG	3.9	96.1	7.5	1.0	500	25	1.0	384
1N5916BG	4.3	87.2	6.0	1.0	500	5.0	1.0	348
1N5917BG	4.7	79.8	5.0	1.0	500	5.0	1.5	319
1N5918BG	5.1	73.5	4.0	1.0	350	5.0	2.0	294
1N5919BG	5.6	66.9	2.0	1.0	250	5.0	3.0	267
1N5920BG	6.2	60.5	2.0	1.0	200	5.0	4.0	241
1N5921BG	6.8	55.1	2.5	1.0	200	5.0	5.2	220
1N5922BG	7.5	50	3.0	0.5	400	5.0	6.0	200
1N5923BG	8.2	45.7	3.5	0.5	400	5.0	6.5	182
1N5924BG	9.1	41.2	4.0	0.5	500	5.0	7.0	164
1N5925BG	10	37.5	4.5	0.25	500	5.0	8.0	150
1N5926BG	11	34.1	5.5	0.25	550	1.0	8.4	136
1N5927BG	12	31.2	6.5	0.25	550	1.0	9.1	125
1N5928BG	13	28.8	7.0	0.25	550	1.0	9.9	115
1N5929BG	15	25	9.0	0.25	600	1.0	11.4	100
1N5930BG	16	23.4	10	0.25	600	1.0	12.2	93
1N5931BG	18	20.8	12	0.25	650	1.0	13.7	83
1N5932BG	20	18.7	14	0.25	650	1.0	15.2	75
1N5933BG	22	17	17.5	0.25	650	1.0	16.7	68
1N5934BG	24	15.6	19	0.25	700	1.0	18.2	62
1N5935BG	27	13.9	23	0.25	700	1.0	20.6	55
1N5936BG	30	12.5	28	0.25	750	1.0	22.8	50
1N5937BG	33	11.4	33	0.25	800	1.0	25.1	45
1N5938BG	36	10.4	38	0.25	850	1.0	27.4	41
1N5939BG	39	9.6	45	0.25	900	1.0	29.7	38
1N5940BG	43	8.7	53	0.25	950	1.0	32.7	34
1N5941BG	47	8.0	67	0.25	1000	1.0	35.8	31
1N5942BG	51	7.3	70	0.25	1100	1.0	38.8	29
1N5943BG	56	6.7	86	0.25	1300	1.0	42.6	26
1N5944BG	62	6.0	100	0.25	1500	1.0	47.1	24
1N5945BG	68	5.5	120	0.25	1700	1.0	51.2	22
1N5946BG	75	5.0	140	0.25	2000	1.0	56	20
1N5947BG	82	4.6	160	0.25	2500	1.0	62.2	18
1N5948BG	91	4.1	200	0.25	3000	1.0	69.2	16
1N5949BG	100	3.7	250	0.25	3100	1.0	76	15
1N5950BG	110	3.4	300	0.25	4000	1.0	83.6	13
1N5951BG	120	3.1	380	0.25	4500	1.0	91.2	12
1N5952BG	130	2.9	450	0.25	5000	1.0	98.8	11
1N5953BG	150	2.5	600	0.25	6000	1.0	114	10
1N5954BG	160	2.3	700	0.25	6500	1.0	121.6	9.0
1N5955BG	180	2.1	900	0.25	7000	1.0	136.8	8.0
1N5956BG	200	1.9	1200	0.25	8000	1.0	152	7.0

NOTES:

1. Zener voltage (V_Z) is measured at T_L = 30 °C and 90 seconds after application of dc current.

2. The Zener impedance is derived from the 60 Hz ac voltage, which results when an ac current having an rms value equal to 10% of the dc Zener current (I_{ZT} or I_{ZK}) is superimposed on I_{ZT} or I_{ZK}. See MicroNote 202 for Zener impedance variation with different operating currents.

©2013 Microsemi Corporation

GRAPHS

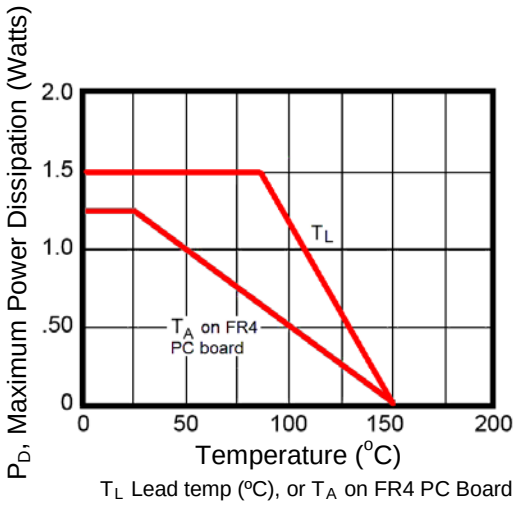

FIGURE 1 – Power Derating Curve

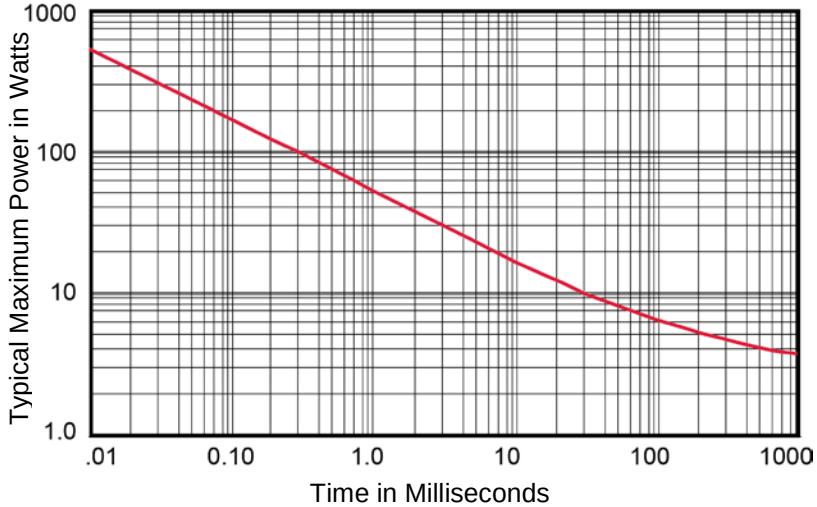

FIGURE 2 – Transient Surge Capability Square-Wave Pulse Width (non-Repetitive) in Milliseconds

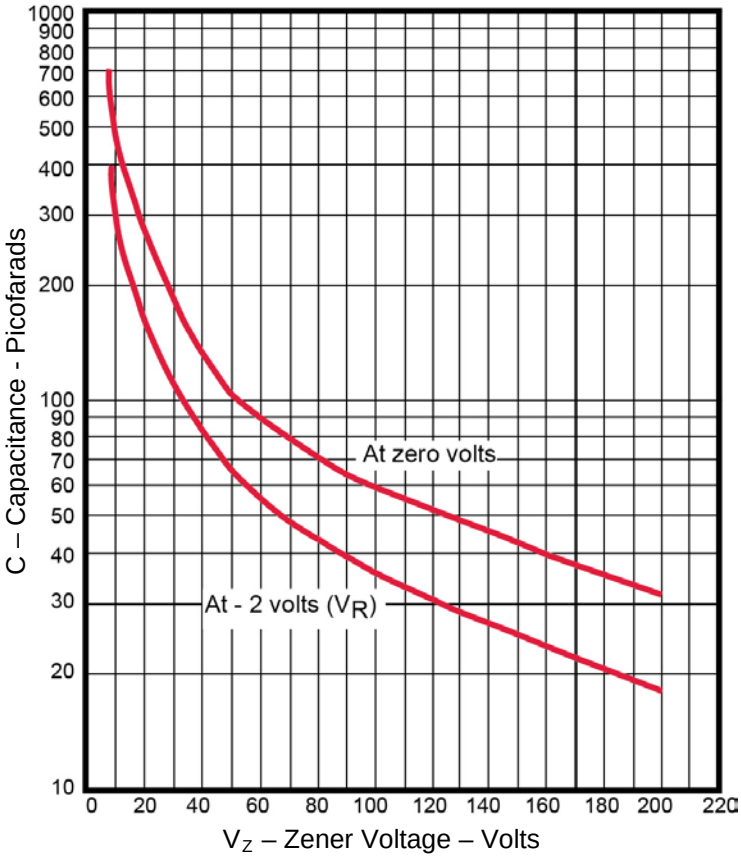

FIGURE 3 – Capacitance vs Zener Voltage

©2013 Microsemi Corporation

PACKAGE DIMENSIONS

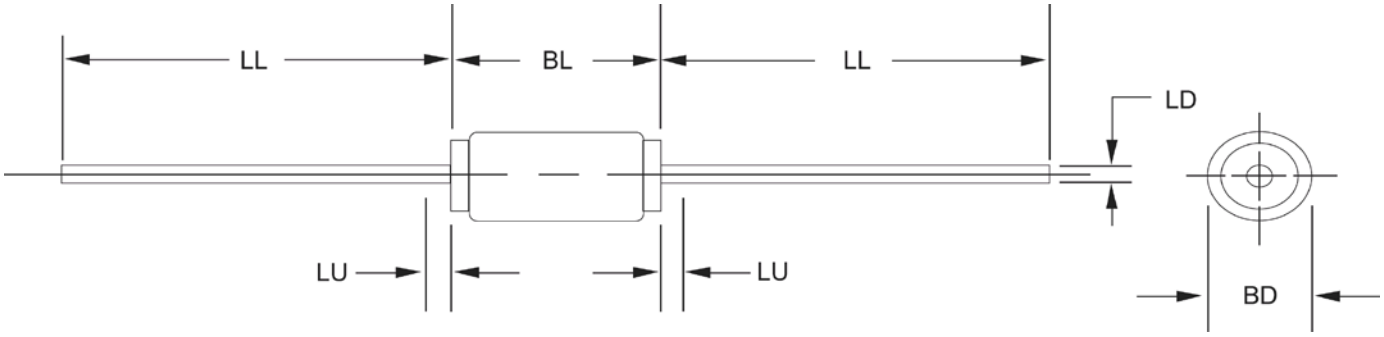

NOTES:

1. Dimensions are in inches.
2. Millimeters are given for information only.
3. Package contour optional with BD and length BL. Heat slugs, if any, shall be included within this cylinder length but shall not be subject to minimum limit of BD.
4. The specified lead diameters apply in the zone between 0.050 inch (1.27 mm) from the diode body and the end of the lead.
5. In accordance with ASME Y14.5M, diameters are equivalent to Φx symbology.

Ltr	DIMENSIONS				Notes
	INCH		MILLIMETERS		
	Min	Max	Min	Max	
BD	0.060	0.085	1.52	2.16	3
BL	0.106	0.160	2.69	4.06	3
LD	0.028	0.032	0.71	0.81	
LL	0.800	1.300	20.32	33.02	
LU	-	0.050	-	1.27	4

©2013 Microsemi Corporation

Компания «ЭлектроПласт» предлагает заключение долгосрочных отношений при поставках импортных электронных компонентов на взаимовыгодных условиях!

Наши преимущества:

- Оперативные поставки широкого спектра электронных компонентов отечественного и импортного производства напрямую от производителей и с крупнейших мировых складов;
- Поставка более 17-ти миллионов наименований электронных компонентов;
- Поставка сложных, дефицитных, либо снятых с производства позиций;
- Оперативные сроки поставки под заказ (от 5 рабочих дней);
- Экспресс доставка в любую точку России;
- Техническая поддержка проекта, помощь в подборе аналогов, поставка прототипов;
- Система менеджмента качества сертифицирована по Международному стандарту ISO 9001;
- Лицензия ФСБ на осуществление работ с использованием сведений, составляющих государственную тайну;
- Поставка специализированных компонентов (Xilinx, Altera, Analog Devices, Intersil, Interpoint, Microsemi, Aeroflex, Peregrine, Syfer, Eurofarad, Texas Instrument, Miteq, Cobham, E2V, MA-COM, Hittite, Mini-Circuits,General Dynamics и др.);

Помимо этого, одним из направлений компании «ЭлектроПласт» является направление «Источники питания». Мы предлагаем Вам помощь Конструкторского отдела:

- Подбор оптимального решения, техническое обоснование при выборе компонента;
- Подбор аналогов;
- Консультации по применению компонента;
- Поставка образцов и прототипов;
- Техническая поддержка проекта;
- Защита от снятия компонента с производства.

Как с нами связаться

Телефон: 8 (812) 309 58 32 (многоканальный)
Факс: 8 (812) 320-02-42
Электронная почта: org@eplast1.ru
Адрес: 198099, г. Санкт-Петербург, ул. Калинина, дом 2, корпус 4, литера А.