4.5 TO 24 VDC UNIPOLAR DEVICE

103SR13A-1

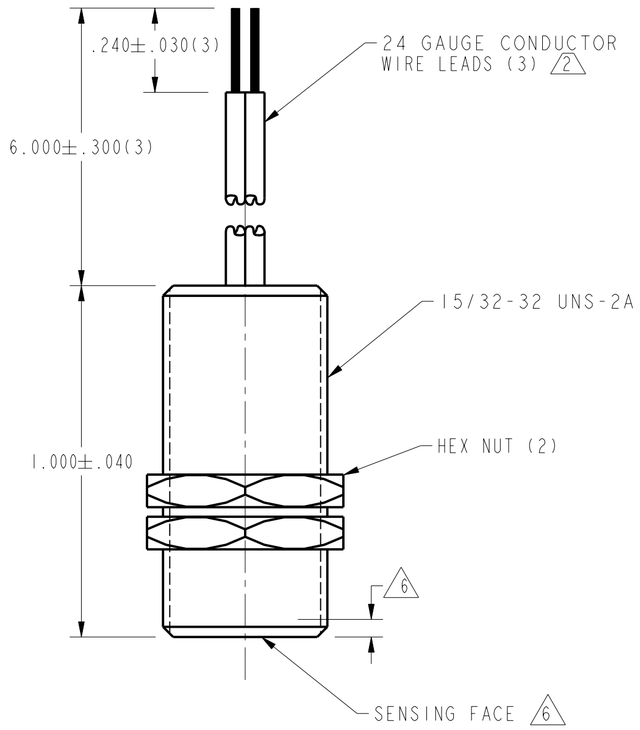

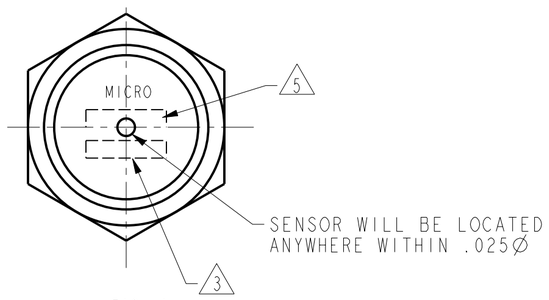

FIG. 1

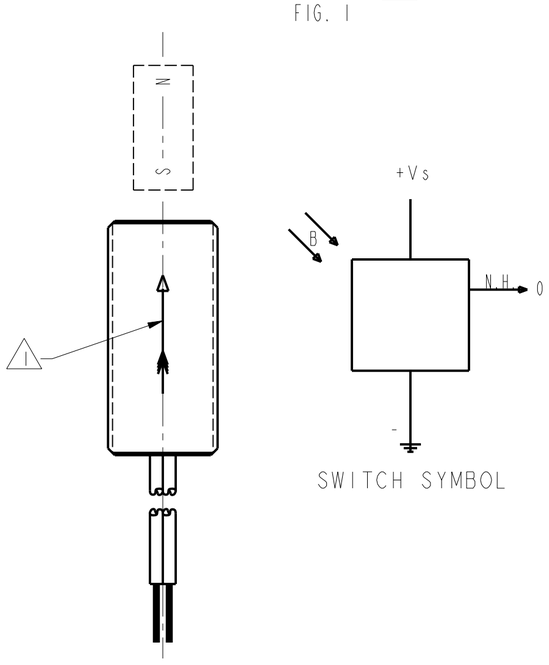

SWITCH SYMBOL

FIG. 2
OPERATE

OPERATING CHARACTERISTICS 1 4

GAUSS	
OPERATE MAX	495
RELEASE MIN	200
DIFF MIN	35

ABSOLUTE MAXIMUM RATINGS

SUPPLY VOLTAGE (Vs) 8	-1.0 VDC TO +25.0 VDC
VOLTAGE EXTERNALLY APPLIED TO OUTPUT	+25 VOLTS DC MAX WITH SWITCH IN "OFF" CONDITION ONLY -0.5 VOLTS MAX WITH SWITCH IN "OFF" OR "ON" CONDITION
OUTPUT CURRENT	40 mA (SINK PER OUTPUT)
TEMPERATURE OPERATE AND STORAGE	-40°C TO 100°C
MAGNETIC FLUX	NO LIMIT, THE CIRCUIT CANNOT BE DAMAGED BY MAGNETIC OVERDRIVE

ELECTRICAL CHARACTERISTICS

	MIN	TYP	MAX	REMARKS
SUPPLY CURRENT 7			10.0 mA	ON CONDITION
OUTPUT VOLTAGE (OPERATED)			0.4 V	SINKING 20 mA PER OUTPUT
OUTPUT LEAKAGE CURRENT (RELEASED)			20μ A	LEAKAGE INTO SWITCH OUTPUT
OUTPUT SWITCHING TIME (SINKING 20 mA) RISE TIME 4 FALL TIME			 1.5μ SEC 0.5μ SEC	 10% TO 90% 90% TO 10%

NOTE: THIS DEVICE IS NOT PROTECTED AGAINST HIGH ELECTRICAL NOISE. IF ERRATIC OPERATION OCCURS AFTER INSTALLATION, INSTALL A CAPACITOR ACROSS THE INPUT TERMINALS (0.1 MFD). IF ERRATIC OPERATION CONTINUES, YOU MAY HAVE TO USE THE INDUSTRIAL DEVICES THAT MICRO SWITCH MANUFACTURES. PLEASE CONTACT YOUR LOCAL FIELD REPRESENTATIVE FOR INFORMATION.

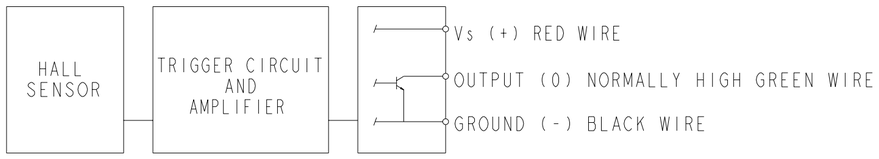

BLOCK DIAGRAM SHOWING CURRENT SINKING OUTPUTS

NOTES

1. FLUX ENTERING THE SOUTH POLE OF THE MAGNET WILL OPERATE THE SENSOR WHEN MAGNET IS POSITIONED AS SHOWN IN FIGURE 2. THIS ASSUMES THE CONVENTION THAT THE DIRECTION OF THE EXTERNAL FLUX OF A MAGNET IS FROM THE NORTH TO THE SOUTH POLE OF THE MAGNET
2. LEADWIRES (INDIVIDUAL WIRES) ARE 24 GAGE STRANDED WITH IRRADIATED POLYETHYLENE INSULATION
3. DATE CODE LOCATED IN THIS AREA
4. FROM -40° C TO 100° C AND 4.5 TO 24 VOLTS
5. CATALOG LISTING LOCATED IN THIS AREA
6. SENSITIVE AREA IS LOCATED .050 BEHIND THE SENSING FACE
7. AT 24°±2° C
8. Vs IS THE UNREGULATED SUPPLY VOLTAGE

ANSI Y14.5M-1982 APPLIES

THIS DRAWING COVERS A PROPRIETARY ITEM AND IS THE PROPERTY OF MICRO SWITCH. A DIVISION OF HONEYWELL. THIS DRAWING IS NOT TO BE COPIED OR USED WITHOUT THE APPROVAL OF MICRO SWITCH.

MICRO SWITCH a Honeywell Division
FED. MFG. CODE 91929

MAGNETICALLY OPERATED CYLINDRICAL HALL SWITCH

CATALOG LISTING
103SR13A-1

THIRD ANGLE PROJECTION

SCALE 3 " 1

DO NOT SCALE PRINT

UNLESS OTHERWISE SPECIFIED TOLERANCES ARE

ONE PLACE	(.0)	±.030
TWO PLACES	(.00)	±.015
THREE PLACES	(.000)	±.005
ANGLES		±

WEIGHT

103SR13A-1 PAGE 1 OF 1 RELEASE NO. PR-4252 REPLACES
DRAWING NUMBER
ISSUE 11
REVISIONS
A C095082A TSM 27JUL99
CHECK
CHECK 27JUL99
JAF
CHECK
DRAWN TSM 27JUL99
PTC/CAD 2D

4.5 TO 24 VDC UNIPOLAR DEVICE

103SR13A-1

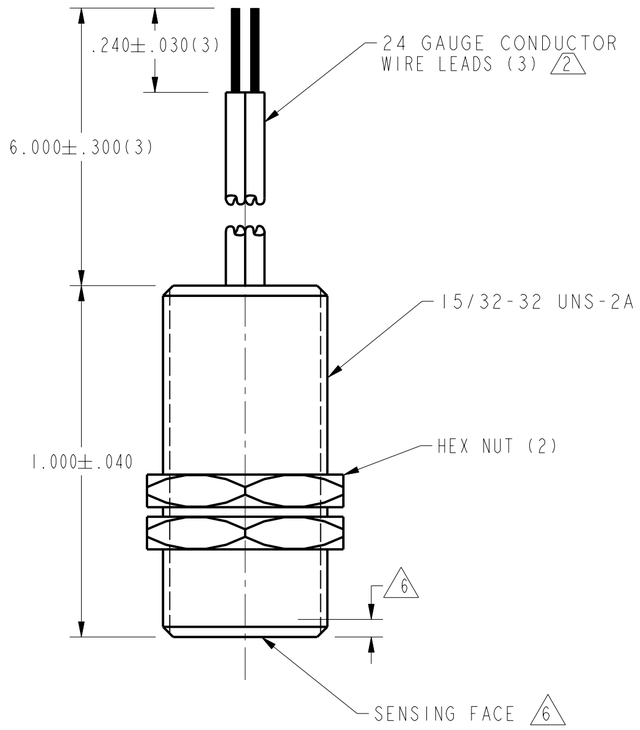

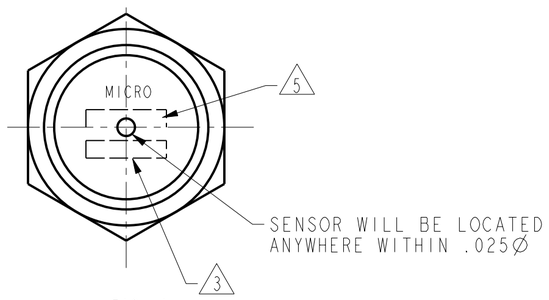

FIG. 1

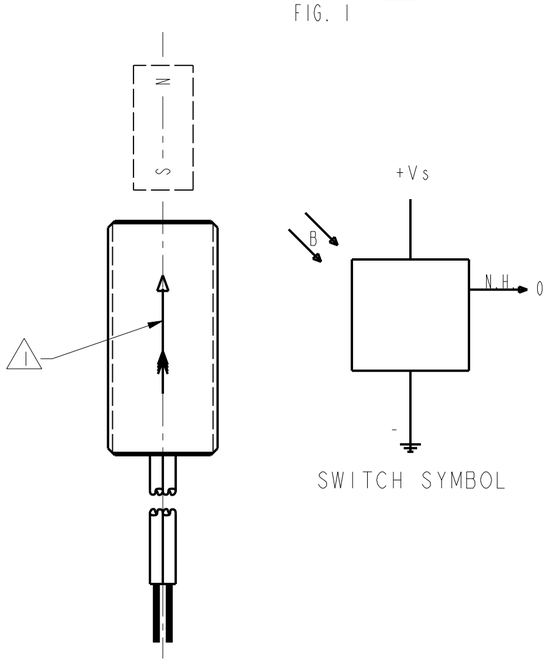

SWITCH SYMBOL

FIG. 2
OPERATE

OPERATING CHARACTERISTICS 1 4

GAUSS	
OPERATE MAX	495
RELEASE MIN	200
DIFF MIN	35

ABSOLUTE MAXIMUM RATINGS

SUPPLY VOLTAGE (Vs) 8	-1.0 VDC TO +25.0 VDC
VOLTAGE EXTERNALLY APPLIED TO OUTPUT	+25 VOLTS DC MAX WITH SWITCH IN "OFF" CONDITION ONLY -0.5 VOLTS MAX WITH SWITCH IN "OFF" OR "ON" CONDITION
OUTPUT CURRENT	40 mA (SINK PER OUTPUT)
TEMPERATURE OPERATE AND STORAGE	-40°C TO 100°C
MAGNETIC FLUX	NO LIMIT, THE CIRCUIT CANNOT BE DAMAGED BY MAGNETIC OVERDRIVE

ELECTRICAL CHARACTERISTICS

	MIN	TYP	MAX	REMARKS
SUPPLY CURRENT 7			10.0 mA	ON CONDITION
OUTPUT VOLTAGE (OPERATED)			0.4 V	SINKING 20 mA PER OUTPUT
OUTPUT LEAKAGE CURRENT (RELEASED)			20μ A	LEAKAGE INTO SWITCH OUTPUT
OUTPUT SWITCHING TIME (SINKING 20 mA)				
RISE TIME 4			1.5μ SEC	10% TO 90%
FALL TIME			0.5μ SEC	90% TO 10%

NOTE: THIS DEVICE IS NOT PROTECTED AGAINST HIGH ELECTRICAL NOISE. IF ERRATIC OPERATION OCCURS AFTER INSTALLATION, INSTALL A CAPACITOR ACROSS THE INPUT TERMINALS (0.1 MFD). IF ERRATIC OPERATION CONTINUES, YOU MAY HAVE TO USE THE INDUSTRIAL DEVICES THAT MICRO SWITCH MANUFACTURES. PLEASE CONTACT YOUR LOCAL FIELD REPRESENTATIVE FOR INFORMATION.

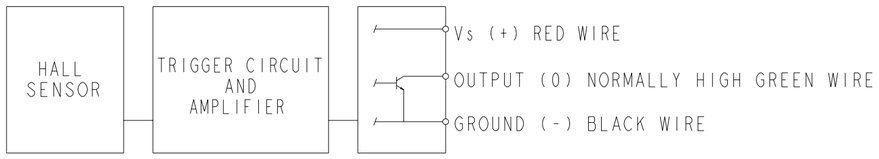

BLOCK DIAGRAM SHOWING CURRENT SINKING OUTPUTS

NOTES

1. FLUX ENTERING THE SOUTH POLE OF THE MAGNET WILL OPERATE THE SENSOR WHEN MAGNET IS POSITIONED AS SHOWN IN FIGURE 2. THIS ASSUMES THE CONVENTION THAT THE DIRECTION OF THE EXTERNAL FLUX OF A MAGNET IS FROM THE NORTH TO THE SOUTH POLE OF THE MAGNET
2. LEADWIRES (INDIVIDUAL WIRES) ARE 24 GAGE STRANDED WITH IRRADIATED POLYETHYLENE INSULATION
3. DATE CODE LOCATED IN THIS AREA
4. FROM -40° C TO 100° C AND 4.5 TO 24 VOLTS
5. CATALOG LISTING LOCATED IN THIS AREA
6. SENSITIVE AREA IS LOCATED .050 BEHIND THE SENSING FACE
7. AT 24°±2° C
8. Vs IS THE UNREGULATED SUPPLY VOLTAGE

CAUTION
ELECTROSTATIC SENSITIVE DEVICES
DO NOT OPEN OR HANDLE EXCEPT AT A STATIC FREE WORKSTATION

ESD SENSITIVITY: CLASS 3

THIRD ANGLE PROJECTION

SCALE 3 " 1

DO NOT SCALE PRINT

UNLESS OTHERWISE SPECIFIED TOLERANCES ARE

ONE PLACE	(.0)	±.030
TWO PLACES	(.00)	±.015
THREE PLACES	(.000)	±.005
ANGLES		±

WEIGHT

THIS DRAWING COVERS A PROPRIETARY ITEM AND IS THE PROPERTY OF MICRO SWITCH. A DIVISION OF HONEYWELL. THIS DRAWING IS NOT TO BE COPIED OR USED WITHOUT THE APPROVAL OF MICRO SWITCH.

MICRO SWITCH
a Honeywell Division
FED. MFG. CODE 91929

MAGNETICALLY OPERATED CYLINDRICAL HALL SWITCH

CATALOG LISTING
103SR13A-1

ANSI Y14.5M-1982 APPLIES

103SR13A-1 | PAGE 1 OF 1 | RELEASE NO. PR-4252 | REPLACES
DRAWING NUMBER | ISSUE 12 | CHECK
REVISIONS
A C095082A TSM 27JUL99
B 201747 JLH DEC00
CHECK | 27JUL99 | JAF | CHECK | 27JUL99
PTC/CAD 2D | DRAWN TSM

Компания «ЭлектроПласт» предлагает заключение долгосрочных отношений при поставках импортных электронных компонентов на взаимовыгодных условиях!

Наши преимущества:

- Оперативные поставки широкого спектра электронных компонентов отечественного и импортного производства напрямую от производителей и с крупнейших мировых складов;
- Поставка более 17-ти миллионов наименований электронных компонентов;
- Поставка сложных, дефицитных, либо снятых с производства позиций;
- Оперативные сроки поставки под заказ (от 5 рабочих дней);
- Экспресс доставка в любую точку России;
- Техническая поддержка проекта, помощь в подборе аналогов, поставка прототипов;
- Система менеджмента качества сертифицирована по Международному стандарту ISO 9001;
- Лицензия ФСБ на осуществление работ с использованием сведений, составляющих государственную тайну;
- Поставка специализированных компонентов (Xilinx, Altera, Analog Devices, Intersil, Interpoint, Microsemi, Aeroflex, Peregrine, Syfer, Eurofarad, Texas Instrument, Miteq, Cobham, E2V, MA-COM, Hittite, Mini-Circuits,General Dynamics и др.);

Помимо этого, одним из направлений компании «ЭлектроПласт» является направление «Источники питания». Мы предлагаем Вам помощь Конструкторского отдела:

- Подбор оптимального решения, техническое обоснование при выборе компонента;
- Подбор аналогов;
- Консультации по применению компонента;
- Поставка образцов и прототипов;
- Техническая поддержка проекта;
- Защита от снятия компонента с производства.

Как с нами связаться

Телефон: 8 (812) 309 58 32 (многоканальный)
Факс: 8 (812) 320-02-42
Электронная почта: org@eplast1.ru
Адрес: 198099, г. Санкт-Петербург, ул. Калинина, дом 2, корпус 4, литера А.