3M™ PIN STRIP HEADER, 951 SERIES

2MM AND 2MM X 2MM STRAIGHT, RIGHT ANGLE AND SURFACE MOUNT, SOLDER TAIL

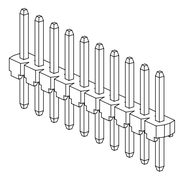

SINGLE ROW
STRAIGHT
VERSION

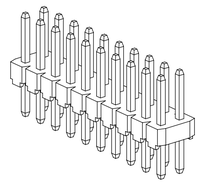

DUAL ROW
STRAIGHT
VERSION

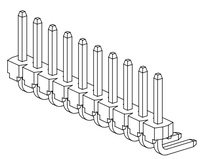

SINGLE ROW
RIGHT ANGLE
VERSION

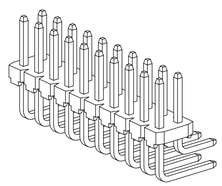

DUAL ROW
RIGHT ANGLE
VERSION

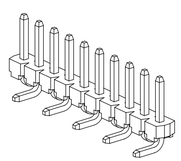

SINGLE ROW
SURFACE MOUNT
VERSION

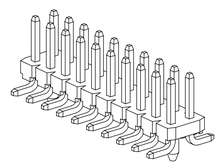

DUAL ROW
SURFACE MOUNT
VERSION

NOTES

1. REGULATORY INFORMATION:
VISIT 3M.com/regs OR CONTACT YOUR 3M REPRESENTATIVE TO FIND THE RoHS COMPLIANCE STATUS OF THE 3M PART YOU ARE INTERESTED IN.

2 IN THE EVENT OF CONFLICT BETWEEN THIS DATA AND THAT CONTAINED IN THE PRODUCT SPECIFICATION, THE PRODUCT SPECIFICATION TAKES PRECEDENT.

3 N = THE NUMBER OF POSITIONS.

2 PHYSICAL:

INSULATOR:	
MATERIAL:	HIGH TEMP THERMOPLASTIC
FLAMMABILITY:	UL94V-0
COLOR:	BLACK
CONTACT:	
MATERIAL:	BRASS
PLATING:	
UNDER PLATING:	50μ" [1.27μm] NICKEL-OVERALL
WIPING AREA:	GOLD FLASH
SOLDER TAILS:	40-118μ" [1-3μm]
MARKINGS:	ORIENTATION TRIANGLE

2 ELECTRICAL:

CURRENT RATING:	2A
CONTACT RESISTANCE:	≤ 20mΩ
INSULATION RESISTANCE:	≥ 1000MΩ
WITHSTANDING VOLTAGE:	$500V_{RMS}$ 1mA, 60s

2 MECHANICAL:

RETENTION FORCE:	≥ 4.5N PER PIN

2 ENVIRONMENTAL:

TEMPERATURE RATING:	-55°C TO 125°C
HUMIDITY:	≤ 93% AT 40°C
RESISTANCE TO SOLDERING HEAT:	PBT, 245°C±5°C, 10s

DIMENSIONS: INCH [MM]
[MM] FOR REF. ONLY

REV	ECO	ISSUE DATE AND DESCRIPTION	DRFT	CHKD
B	76546	NOV 08,2017 REVISE SHT 4	JNC	SC
A	72044	MAR 06,2017 REVISE ELECTRICAL NOTES 3-2-17 REMOVED 2 CONNECTORS PRODUCTION RELEASE	JNC	TS

DESIGN REFERENCE | NEXT ASSEMBLY

ACCESS CODES

DRFT: CASTIGLIONE DATE: FEB 23,2015 | MFG | DATE

CHKD | DATE | APPVL: T. SUNIGA DATE: FEB 23,2015

DIVISION | DIVISION CODE: EMSD

DO NOT SCALE DRAWING | SCALE 4/1

THIRD ANGLE PROJECTION

INTERPRET PER ASME Y14.5 - 2009

MAX SURFACE ROUGHNESS ☐ ALL SURFACES ☐ MARKED ONLY

TOLERANCES EXCEPT AS NOTED

INCHES .0 ± .00 ± .000 ± .0000 ±

MILLIMETERS .0 ± .00 ± .000 ±

ANGLES ±

© 3M COPYRIGHT 2017
This document and the information it contains are 3M property and may not be reproduced or further distributed without 3M permission, or used or disclosed other than for 3M authorized purposes. All rights reserved.

3M Center St. Paul, MN 55144

TITLE: PIN STRIP HEADER, 2MM X 2MM, STRAIGHT, SMT & RA, SOLDER TAIL

CAGE NUMBER | SIZE D | DRAWING NO. 78-5100-2653-3 | REV. B

MODEL 951XXX | DET LIST ☐ YES ☒ NO | SHT 1 OF 5

MM [INCH]			
TOLERANCE - UNLESS NOTED			
	X.	.X	.XX
MM		±.5	±.20
[INCH]		±.02	±.008
[ ] = DIM. FOR REFERENCE ONLY			

UL FILE NO: E68080

3M ELECTRONICS MATERIALS SOLUTIONS DIVISION
INTERCONNECT SOLUTIONS
http://www.3mconnectors.com

3M IS A TRADEMARK OF 3M COMPANY.
FOR TECHNICAL, SALES OR ORDERING INFORMATION CALL 800-225-5373

B REVISION | 78-5100-2653-3 DRAWING NUMBER

Imaged: B.2 Central Standard Time11/27/2017UTC Offset

3M™ PIN STRIP HEADER, 951 SERIES

2MM AND 2MM X 2MM STRAIGHT, RIGHT ANGLE AND SURFACE MOUNT, SOLDER TAIL

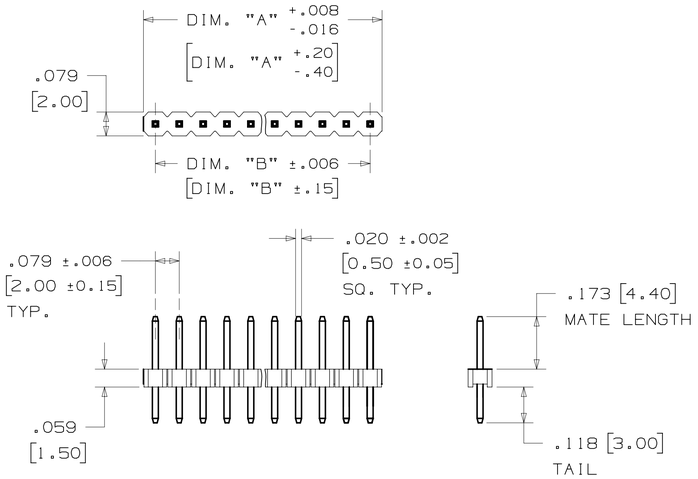

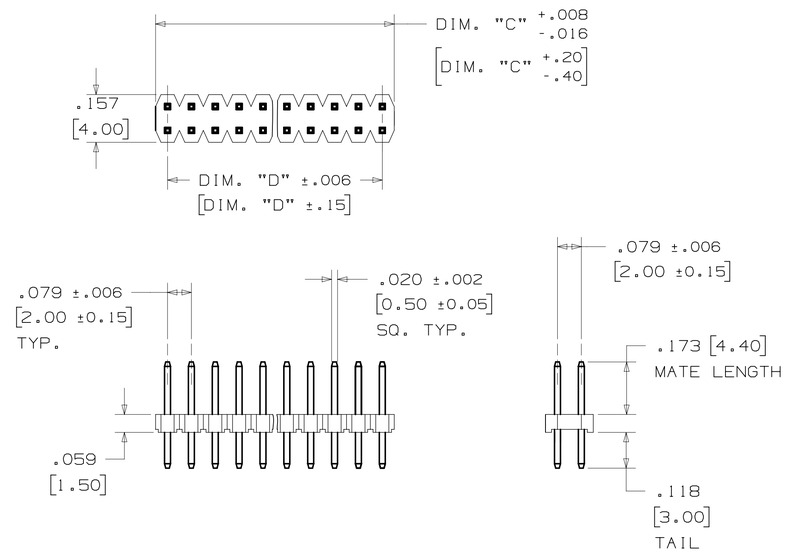

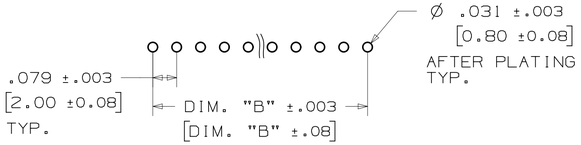

RECOMMENDED PC BOARD LAYOUT
(VIEWED FROM CONNECTOR SIDE)

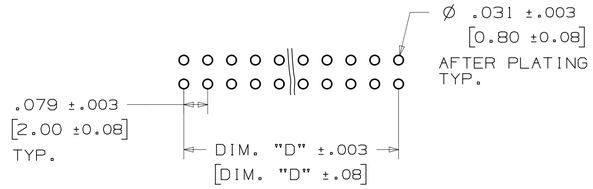

RECOMMENDED PC BOARD LAYOUT
(VIEWED FROM CONNECTOR SIDE)

ORDERING INFORMATION
STRAIGHT VERSION

951XXX-8622-AR

No. OF ROWS:
1 = 1 ROW
2 = 2 ROW

CONTACT QTY.
40 PINS = 1 ROW
80 PINS = 2 ROW

TABLE 1	
DIM. "A"	.079 [2.00] X N
DIM. "B"	.079 [2.00] X (N-1)
DIM. "C"	.079 [2.00] X (N/2)
DIM. "D"	.079 [2.00] X (N/2-1)
SEE NOTE 3	

REV	ECO	ISSUE DATE AND DESCRIPTION	DRFT	CHKD
B	76546	NOV 08,2017 REVISE SHT 4	JNC	SC
A	72044	MAR 06,2017 REVISE ELECTRICAL NOTES 3-2-17 REMOVED 2 CONNECTORS PRODUCTION RELEASE	JNC	TS

DESIGN REFERENCE | NEXT ASSEMBLY

ACCESS CODES

DRFT CASTIGLIONE DATE FEB 23,2015 | MFG | DATE

CHKD | DATE | APPV'L T. SUNIGA DATE FEB 23,2015

DIVISION | DIVISION CODE EMSD

3M Center St. Paul, MN 55144

© 3M COPYRIGHT 2017
This document and the information it contains are 3M property and may not be reproduced or further distributed without 3M permission, or used or disclosed other than for 3M authorized purposes. All rights reserved.

DO NOT SCALE DRAWING | SCALE 4:1 | TOLERANCES EXCEPT AS NOTED

INCHES: .0 ±, .00 ±, .000 ±, .0000 ±

MILLIMETERS: 0 ±, .0 ±, .00 ±, .000 ±

ANGLES ±

THIRD ANGLE PROJECTION

INTERPRET PER ASME Y14.5 - 2009

MAX SURFACE ROUGHNESS ☐ ALL SURFACES ☐ MARKED ONLY

TITLE: PIN STRIP HEADER, 2MM X 2MM, STRAIGHT, SMT & RA, SOLDER TAIL

CAGE NUMBER | SIZE D | DRAWING NO. 78-5100-2653-3 | REV. B

MODEL 951XXX | DET. LISTS ☐ YES ☒ NO | SHT 2 OF 5

78-5100-2653-3 B

Imaged: B.2 Central Standard Timell/27/2017UTC Offset

3M™ PIN STRIP HEADER, 951 SERIES

2MM AND 2MM X 2MM STRAIGHT, RIGHT ANGLE AND SURFACE MOUNT, SOLDER TAIL

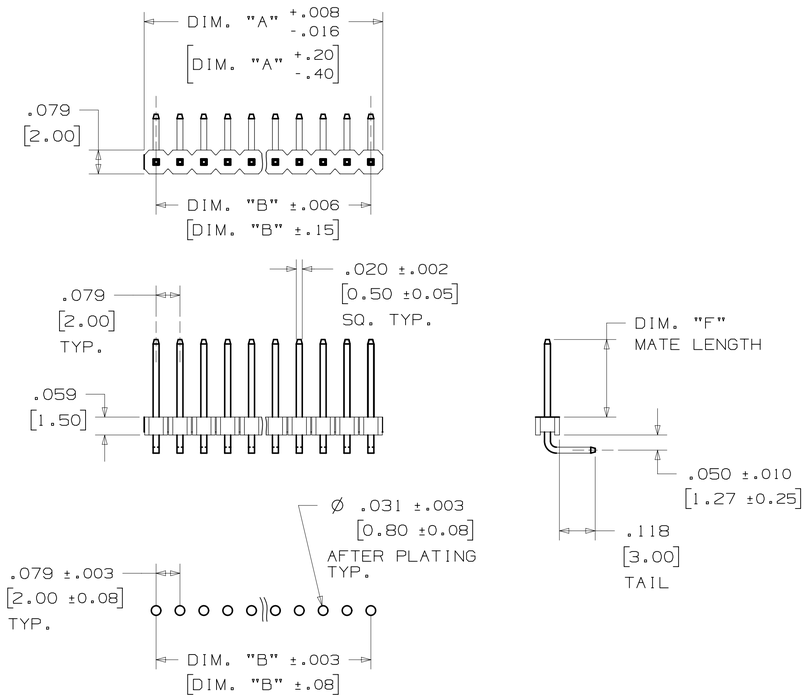

RECOMMENDED PC BOARD LAYOUT
(VIEWED FROM CONNECTOR SIDE)

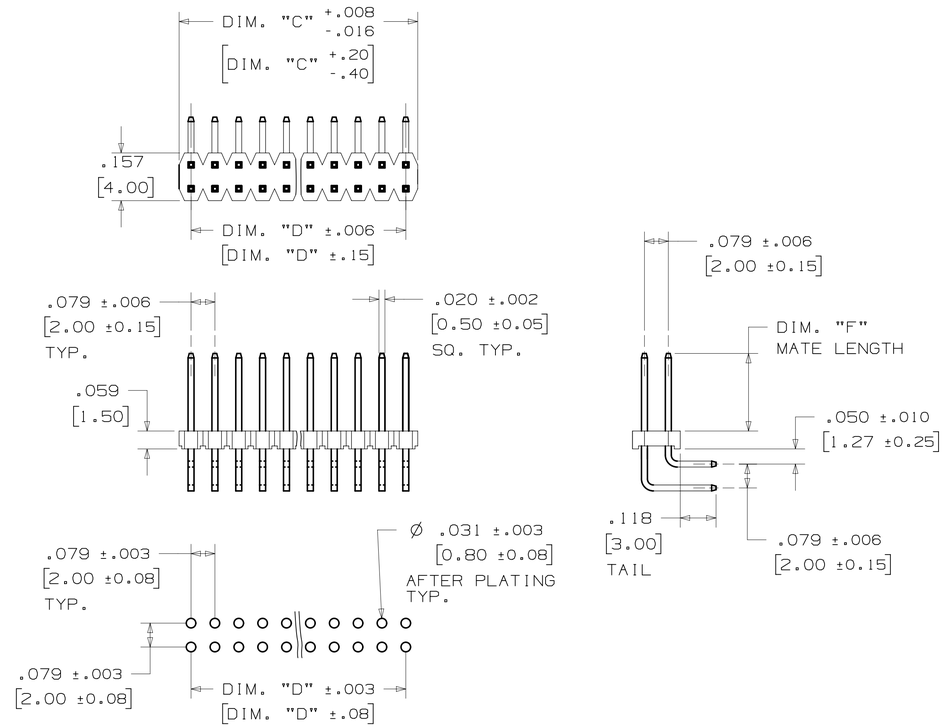

RECOMMENDED PC BOARD LAYOUT
(VIEWED FROM CONNECTOR SIDE)

ORDERING INFORMATION
RIGHT ANGLE VERSION

951XXX-7X22-AR

No. OF ROWS:
1 = 1 ROW
2 = 2 ROW

CONTACT QTY:
40 PINS = 1 ROW
80 PINS = 2 ROW

DIM. "F"
MATING PIN LENGTH:
6 = .173 [4.40]
7 = .295 [7.50]

TABLE 2	
DIM. "A"	.079 [2.00] X N
DIM. "B"	.079 [2.00] X (N-1)
DIM. "C"	.079 [2.00] X (N/2)
DIM. "D"	.079 [2.00] X (N/2-1)
SEE NOTE 3	

REV	ECO	ISSUE DATE AND DESCRIPTION	DRFT	CHKD
B	76546	NOV 08,2017 REVISE SHT 4	JNC	SC
A	72044	MAR 06,2017 REVISE ELECTRICAL NOTES 3-2-17 REMOVED 2 CONNECTORS PRODUCTION RELEASE	JNC	TS

DESIGN REFERENCE | NEXT ASSEMBLY | ACCESS CODES

DRFT CASTIGLIONE | DATE FEB 23,2015 | MFG | DATE
CHKD | DATE | APPVL T. SUNIGA | DATE FEB 23,2015

DIVISION | DIVISION CODE EMSD

DO NOT SCALE DRAWING | SCALE 4/1

THIRD ANGLE PROJECTION

INTERPRET PER ASME Y14.5 - 2009

MAX SURFACE ROUGHNESS ☐ ALL SURFACES ☐ MARKED ONLY

TOLERANCES EXCEPT AS NOTED
INCHES .0 ± .00 ± .000 ± .0000 ±
MILLIMETERS 0 ± .0 ± .00 ± .000 ±
ANGLES ±

© 3M COPYRIGHT 2017
This document and the information it contains are 3M property and may not be reproduced or further distributed without 3M permission, or used or disclosed other than for 3M authorized purposes. All rights reserved.

3M Center
St. Paul,
MN 55144

TITLE
PIN STRIP HEADER, 2MM X 2MM, STRAIGHT, SMT & RA, SOLDER TAIL

CAGE NUMBER | SIZE D | DRAWING NO. 78-5100-2653-3 | REV. B

MODEL 951XXX | DET LISTS ☐ YES ☒ NO | SHT 3 OF 5

78-5100-2653-3 B

Imaged: B.2 Central Standard Time11/27/2017UTC Offset

3M™ PIN STRIP HEADER, 951 SERIES

2MM AND 2MM X 2MM STRAIGHT, RIGHT ANGLE AND SURFACE MOUNT, SOLDER TAIL

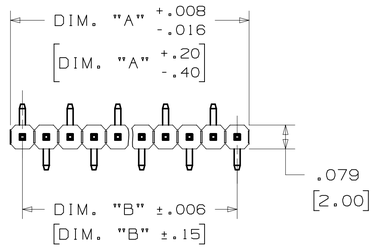

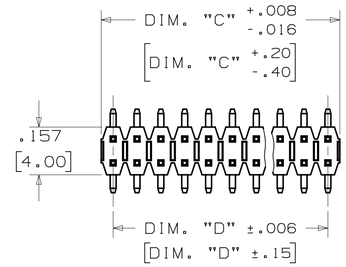

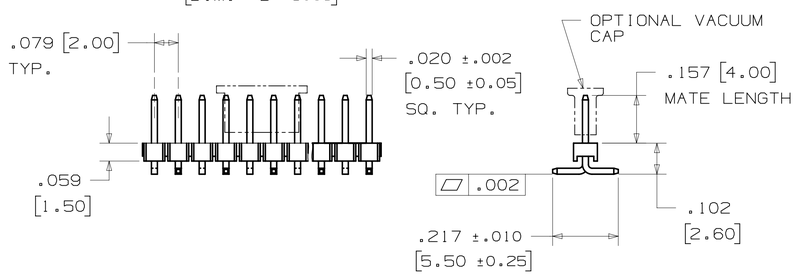

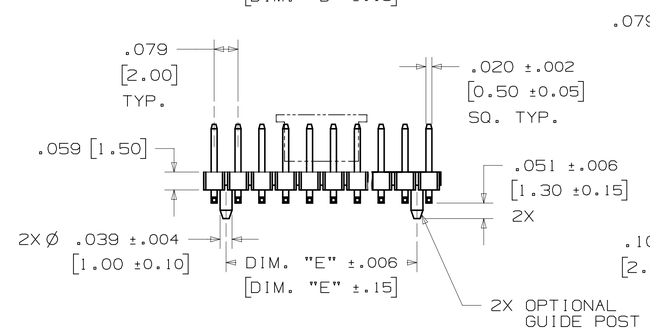

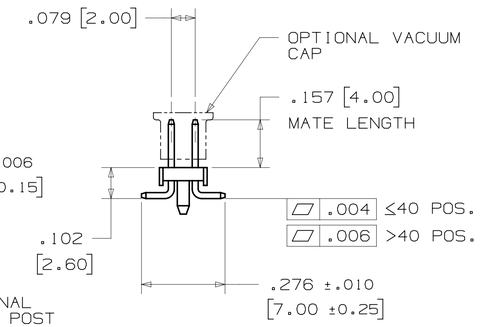

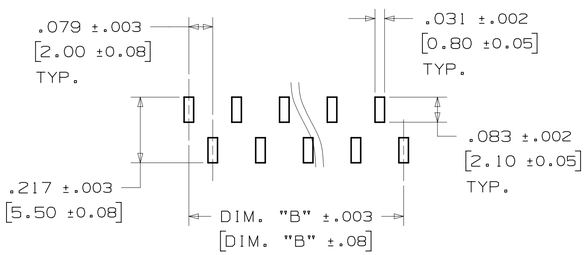

RECOMMENDED PC BOARD LAYOUT
(VIEWED FROM CONNECTOR SIDE)

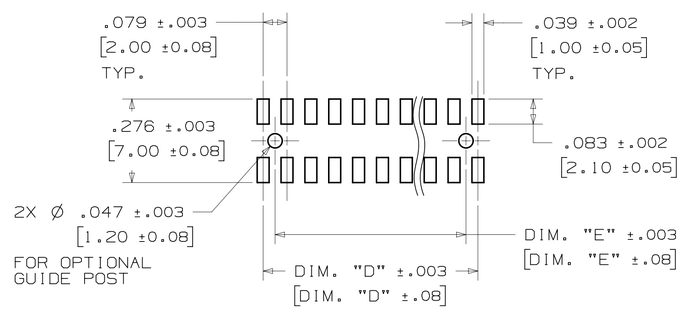

RECOMMENDED PC BOARD LAYOUT
(VIEWED FROM CONNECTOR SIDE)

ORDERING INFORMATION
SURFACE MOUNT VERSION

951XXX-25X0-AR-XX

No. OF ROWS:
1 = 1 ROW
2 = 2 ROW

CONTACT QUANTITY:
40 PINS = 1 ROW
80 PINS = 2 ROW

BOARD LOCATION FEATURES:
3 = 1 ROW / PIN 1 LEFT
2 = 2 ROW / NONE
5 = 2 ROW / WITH LOCATION POST
(8 - 14 CONTACTS)

PACKAGING:
TP = TUBE
PT = TUBE WITH PAD
PR = TAPE & REEL WITH PAD
NOTE: PAD OPTIONS
1 ROW = 40 POSITION
2 ROW = 80 POSITION

TABLE 3	
DIM. "A"	.079 [2.00] X N
DIM. "B"	.079 [2.00] X (N-1)
DIM. "C"	.079 [2.00] X (N/2)
DIM. "D"	.079 [2.00] X (N/2-1)
DIM. "E"	.079 [2.00] X (N/2-2)
SEE NOTE 3	

TAPE & REEL OPTION		
1 ROW	CONTACT QTY.	40
2 ROW		80
TAPE WIDTH [MM]		104

REV	ECO	ISSUE DATE AND DESCRIPTION	DRFT	CHKD
B	76546	NOV 08,2017 REVISE SHT 4	JNC	SC
A	72044	MAR 06,2017 REVISE ELECTRICAL NOTES 3-2-17 REMOVED 2 CONNECTORS PRODUCTION RELEASE	JNC	TS

DESIGN REFERENCE | NEXT ASSEMBLY | ACCESS CODES

DRFT: CASTIGLIONE — DATE: FEB 23,2015 — MFG — DATE
CHKD — DATE — APPVL: T. SUNIGA — DATE: FEB 23,2015

DIVISION — DIVISION CODE: EMSD

DO NOT SCALE DRAWING — SCALE 4/1

THIRD ANGLE PROJECTION

INTERPRET PER ASME Y14.5 - 2009

MAX SURFACE ROUGHNESS ☐ ALL SURFACES ☐ MARKED ONLY

TOLERANCES EXCEPT AS NOTED
INCHES: .0 ±, .00 ±, .000 ±, .0000 ±
MILLIMETERS: .0 ±, .00 ±, .000 ±
ANGLES ±

3M — 3M Center, St. Paul, MN 55144

© 3M COPYRIGHT 2017
This document and the information it contains are 3M property and may not be reproduced or further distributed without 3M permission, or used or disclosed other than for 3M authorized purposes. All rights reserved.

TITLE: PIN STRIP HEADER, 2MM X 2MM, STRAIGHT, SMT & RA, SOLDER TAIL

CAGE NUMBER — SIZE: D — DRAWING NO. 78-5100-2653-3 — REV. B

MODEL: 951XXX — DET. LISTS ☐ YES ☒ NO — SHT 4 OF 5

78-5100-2653-3 (DRAWING NUMBER) B (REVISION)

Imaged: B.2 Central Standard Time11/27/2017UTC Offset

3M™ PIN STRIP HEADER, 951 SERIES

2MM AND 2MM X 2MM STRAIGHT, RIGHT ANGLE AND SURFACE MOUNT, SOLDER TAIL

Regulatory: For regulatory information about this product, visit 3M.com/regs or contact your 3M representative.

Technical Information: The technical information, recommendations and other statements contained in this document are based upon tests or experience that 3M believes are reliable, but the accuracy or completeness of such information is not guaranteed.

Product Use: Many factors beyond 3M's control and uniquely within user's control can affect the use and performance of a 3M product in a particular application. Given the variety of factors that can affect the use and performance of a 3M product, user is solely responsible for evaluating the 3M product and determining whether it is fit for a particular purpose and suitable for user's method of application.

Warranty, Limited Remedy, and Disclaimer: Unless an additional warranty is specifically stated on the applicable 3M product packaging or product literature, 3M warrants that each 3M product meets the applicable 3M product specification at the time 3M ships the product. 3M MAKES NO OTHER WARRANTIES OR CONDITIONS, EXPRESS OR IMPLIED, INCLUDING, BUT NOT LIMITED TO, ANY IMPLIED WARRANTY OR CONDITION OF MERCHANTABILITY OR FITNESS FOR A PARTICULAR PURPOSE OR ANY IMPLIED WARRANTY OR CONDITION ARISING OUT OF A COURSE OF DEALING, CUSTOM OR USAGE OR TRADE. If the 3M product does not conform to this warranty, then the sole and exclusive remedy is, at 3M's option, replacement of the 3M product or refund of the purchase price.

Limitation of Liability: Except where prohibited by law, 3M will not be liable for any loss or damage arising from the 3M product, whether direct, indirect, special, incidental or consequential, regardless of the legal theory asserted, including warranty, contract, negligence or strict liability.

3M Electronics Materials Solutions Division
6801 River Place Blvd.
Austin, TX 78726-9000
1-800-225-5373
www.3M.com/interconnect

REV	ECO	ISSUE DATE AND DESCRIPTION	DRFT	CHKD
B	76546	NOV 08,2017 REVISE SHT 4	JNC	SC
A	72044	MAR 06,2017 REVISE ELECTRICAL NOTES 3-2-17 REMOVED 2 CONNECTORS PRODUCTION RELEASE	JNC	TS

DESIGN REFERENCE | NEXT ASSEMBLY | ACCESS CODES

DRFT: CASTIGLIONE | DATE: FEB 23,2015 | MFG | DATE

CHKD | DATE | APPVL: T. SUNIGA | DATE: FEB 23,2015

DIVISION | DIVISION CODE: EMSD

DO NOT SCALE DRAWING | SCALE 4/1

THIRD ANGLE PROJECTION

INTERPRET PER ASME Y14.5 - 2009

MAX SURFACE ROUGHNESS: ☐ ALL SURFACES ☐ MARKED ONLY

TOLERANCES EXCEPT AS NOTED
INCHES: .0 ±, .00 ±, .000 ±, .0000 ±
MILLIMETERS: 0 ±, .0 ±, .00 ±, .000 ±
ANGLES ±

© 3M COPYRIGHT 2017
This document and the information it contains are 3M property and may not be reproduced or further distributed without 3M permission, or used or disclosed other than for 3M authorized purposes. All rights reserved.

3M Center, St. Paul, MN 55144

TITLE: PIN STRIP HEADER, 2MM X 2MM, STRAIGHT, SMT & RA, SOLDER TAIL

CAGE NUMBER | SIZE: D | DRAWING NO.: 78-5100-2653-3 | REV.: B

MODEL: 951XXX | DET. LISTS ☐ YES ☒ NO | SHT 5 OF 5

78-5100-2653-3 (DRAWING NUMBER) B (REVISION)

Imaged: B.2 Central Standard Time11/27/2017UTC Offset

Компания «ЭлектроПласт» предлагает заключение долгосрочных отношений при поставках импортных электронных компонентов на взаимовыгодных условиях!

Наши преимущества:

- Оперативные поставки широкого спектра электронных компонентов отечественного и импортного производства напрямую от производителей и с крупнейших мировых складов;
- Поставка более 17-ти миллионов наименований электронных компонентов;
- Поставка сложных, дефицитных, либо снятых с производства позиций;
- Оперативные сроки поставки под заказ (от 5 рабочих дней);
- Экспресс доставка в любую точку России;
- Техническая поддержка проекта, помощь в подборе аналогов, поставка прототипов;
- Система менеджмента качества сертифицирована по Международному стандарту ISO 9001;
- Лицензия ФСБ на осуществление работ с использованием сведений, составляющих государственную тайну;
- Поставка специализированных компонентов (Xilinx, Altera, Analog Devices, Intersil, Interpoint, Microsemi, Aeroflex, Peregrine, Syfer, Eurofarad, Texas Instrument, Miteq, Cobham, E2V, MA-COM, Hittite, Mini-Circuits,General Dynamics и др.);

Помимо этого, одним из направлений компании «ЭлектроПласт» является направление «Источники питания». Мы предлагаем Вам помощь Конструкторского отдела:

- Подбор оптимального решения, техническое обоснование при выборе компонента;
- Подбор аналогов;
- Консультации по применению компонента;
- Поставка образцов и прототипов;
- Техническая поддержка проекта;
- Защита от снятия компонента с производства.

Как с нами связаться

Телефон: 8 (812) 309 58 32 (многоканальный)
Факс: 8 (812) 320-02-42
Электронная почта: org@eplast1.ru
Адрес: 198099, г. Санкт-Петербург, ул. Калинина, дом 2, корпус 4, литера А.