- **Low Supply-Voltage Range, 1.8 V . . . 3.6 V**
- **Ultralow-Power Consumption:**
  - **Active Mode: 280 µA at 1 MHz, 2.2V**
  - **Standby Mode: 1.6 µA**
  - **Off Mode (RAM Retention): 0.1 µA**
- **Five Power-Saving Modes**
- **Wake-Up From Standby Mode in less than 6 µs**
- **16-Bit RISC Architecture, 125-ns Instruction Cycle Time**
- **12-Bit A/D Converter With Internal Reference, Sample-and-Hold and Autoscan Feature**
- **16-Bit Timer_B With Seven Capture/Compare-With-Shadow Registers**
- **16-Bit Timer_A With Three Capture/Compare Registers**
- **On-Chip Comparator**
- **Serial Onboard Programming, No External Programming Voltage Needed Programmable Code Protection by Security Fuse**
- **Serial Communication Interface (USART), Functions as Asynchronous UART or Synchronous SPI Interface**
  - **Two USARTs (USART0, USART1) — MSP430x14x(1) Devices**
  - **One USART (USART0) — MSP430x13x Devices**
- **Family Members Include:**
  - **MSP430F133: 8KB+256B Flash Memory, 256B RAM**
  - **MSP430F135: 16KB+256B Flash Memory, 512B RAM**
  - **MSP430F147, MSP430F1471†: 32KB+256B Flash Memory, 1KB RAM**
  - **MSP430F148, MSP430F1481†: 48KB+256B Flash Memory, 2KB RAM**
  - **MSP430F149, MSP430F1491†: 60KB+256B Flash Memory, 2KB RAM**
- **Available in 64-Pin Quad Flat Pack (QFP) and 64-pin QFN**
- **For Complete Module Descriptions, See the *MSP430x1xx Family User's Guide*, Literature Number SLAU049**

† The MSP430F14x1 devices are identical to the MSP430F14x devices with the exception that the ADC12 module is not implemented.

description

The Texas Instruments MSP430 family of ultralow-power microcontrollers consist of several devices featuring different sets of peripherals targeted for various applications. The architecture, combined with five low power modes is optimized to achieve extended battery life in portable measurement applications. The device features a powerful 16-bit RISC CPU, 16-bit registers, and constant generators that attribute to maximum code efficiency. The digitally controlled oscillator (DCO) allows wake-up from low-power modes to active mode in less than 6 µs.

The MSP430x13x and the MSP430x14x(1) series are microcontroller configurations with two built-in 16-bit timers, a fast 12-bit A/D converter (not implemented on the MSP430F14x1 devices), one or two universal serial synchronous/asynchronous communication interfaces (USART), and 48 I/O pins.

Typical applications include sensor systems that capture analog signals, convert them to digital values, and process and transmit the data to a host system. The timers make the configurations ideal for industrial control applications such as ripple counters, digital motor control, EE-meters, hand-held meters, etc. The hardware multiplier enhances the performance and offers a broad code and hardware-compatible family solution.

Please be aware that an important notice concerning availability, standard warranty, and use in critical applications of Texas Instruments semiconductor products and disclaimers thereto appears at the end of this data sheet.

PRODUCTION DATA information is current as of publication date. Products conform to specifications per the terms of Texas Instruments standard warranty. Production processing does not necessarily include testing of all parameters.

Copyright © 2000 − 2004, Texas Instruments Incorporated

AVAILABLE OPTIONS

T_A	PACKAGED DEVICES		
	PLASTIC 64-PIN QFP (PM)	PLASTIC 64-PIN QFP (PAG)	PLASTIC 64-PIN QFN (RTD)
−40°C to 85°C	MSP430F133IPM MSP430F135IPM MSP430F147IPM MSP430F1471IPM MSP430F148IPM MSP430F1481IPM MSP430F149IPM MSP430F1491IPM	MSP430F133IPAG MSP430F135IPAG MSP430F147IPAG MSP430F148IPAG MSP430F149IPAG	MSP430F133IRTD MSP430F135IRTD MSP430F147IRTD MSP430F1471IRTD MSP430F148IRTD MSP430F1481IRTD MSP430F149IRTD MSP430F1491IRTD

pin designation, MSP430F133, MSP430F135

PM, PAG, RTD PACKAGE
(TOP VIEW)

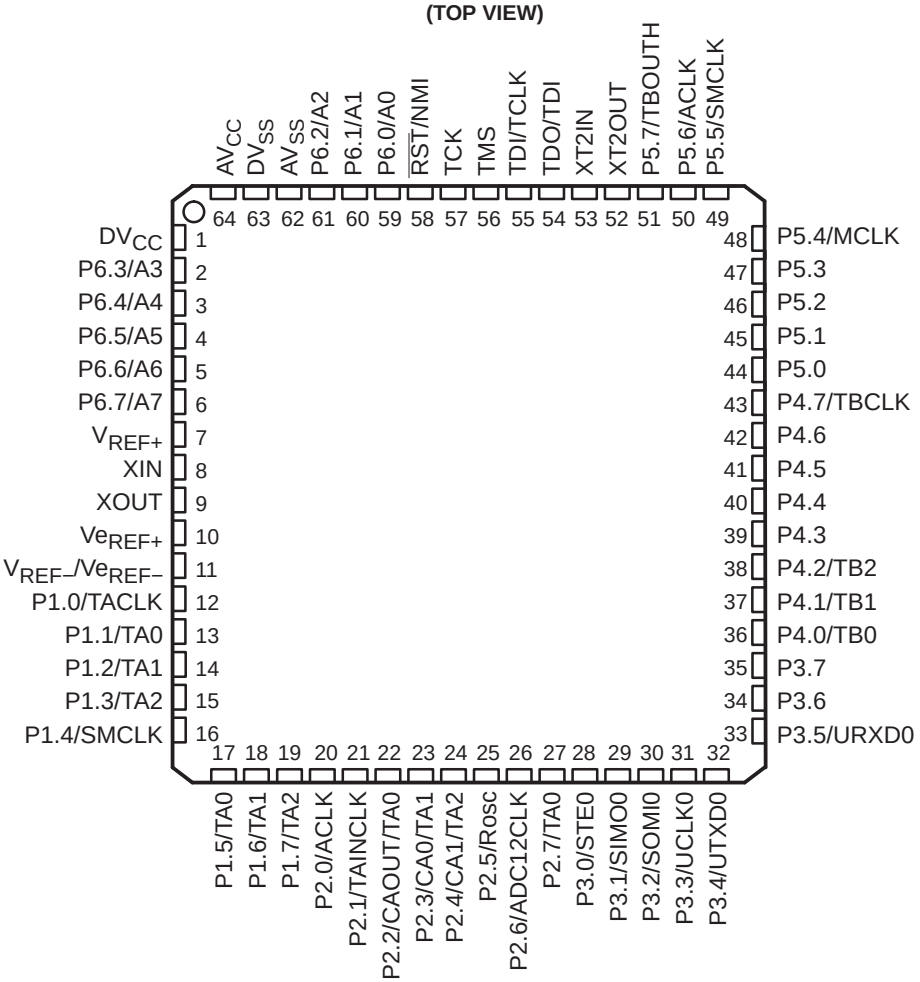

pin designation, MSP430F147, MSP430F148, MSP430F149

PM, PAG, RTD PACKAGE
(TOP VIEW)

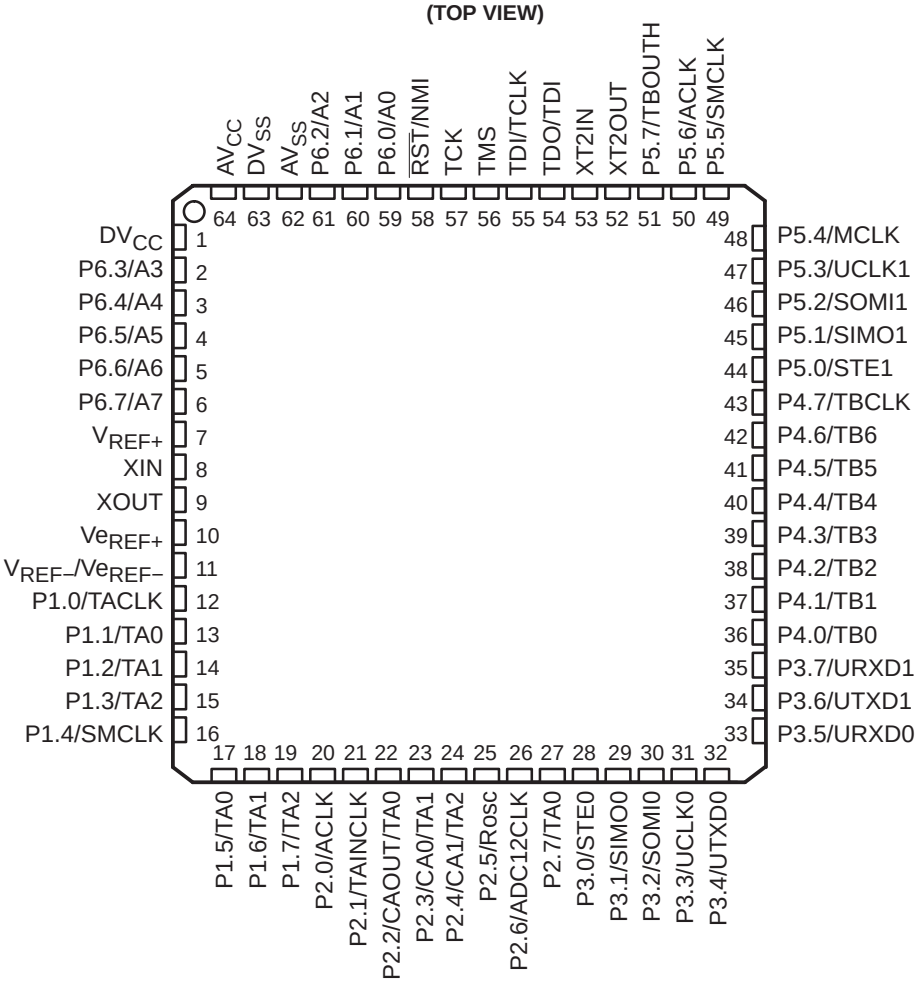

pin designation, MSP430F1471, MSP430F1481, MSP430F1491

PM, RTD PACKAGE
(TOP VIEW)

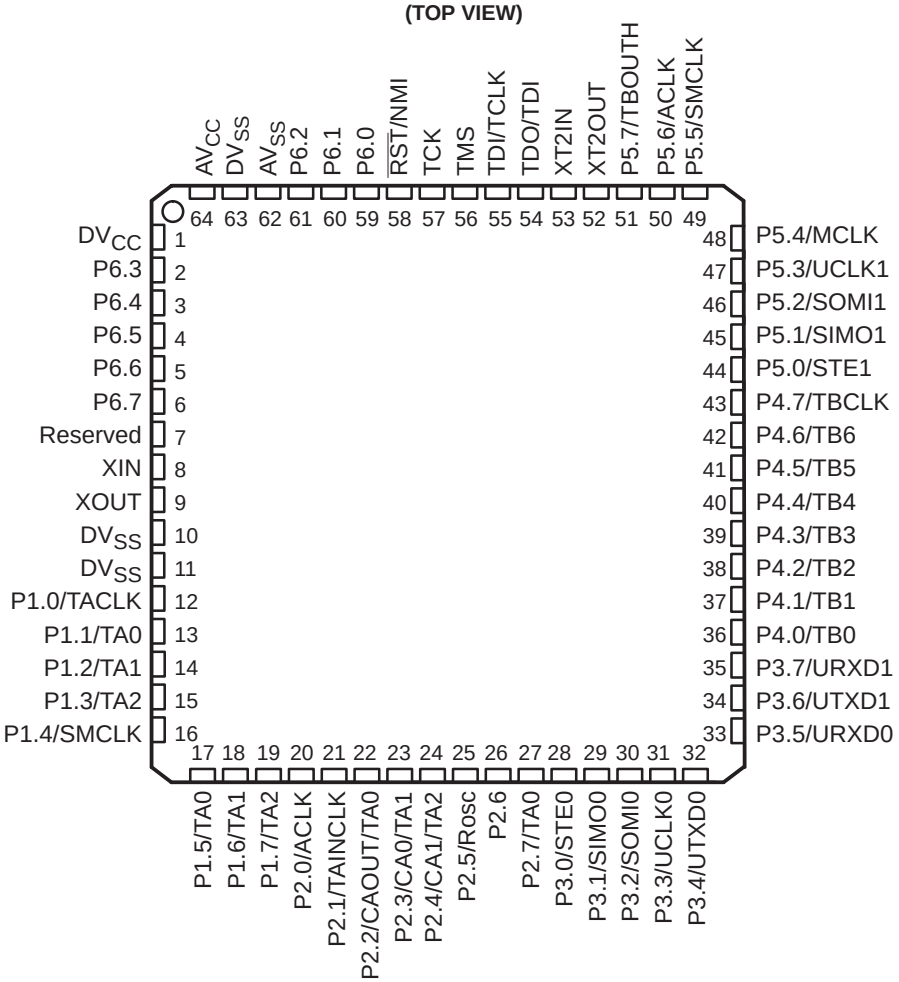

functional block diagrams

MSP430x13x

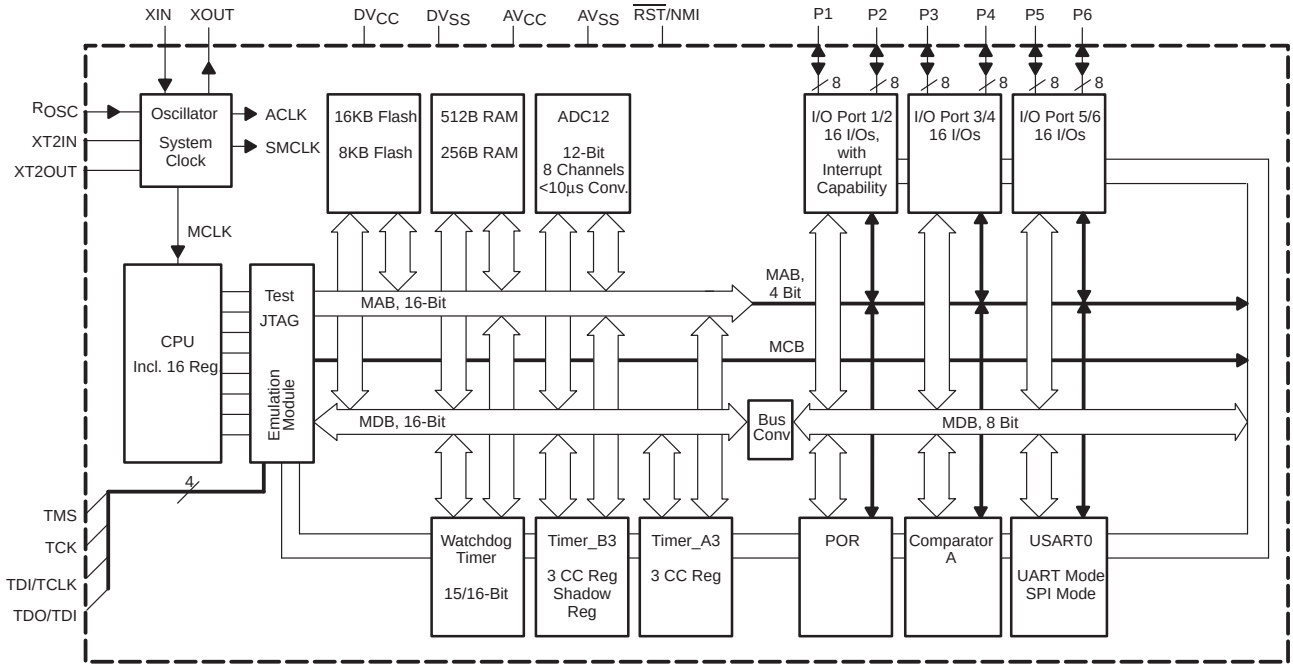

MSP430x14x

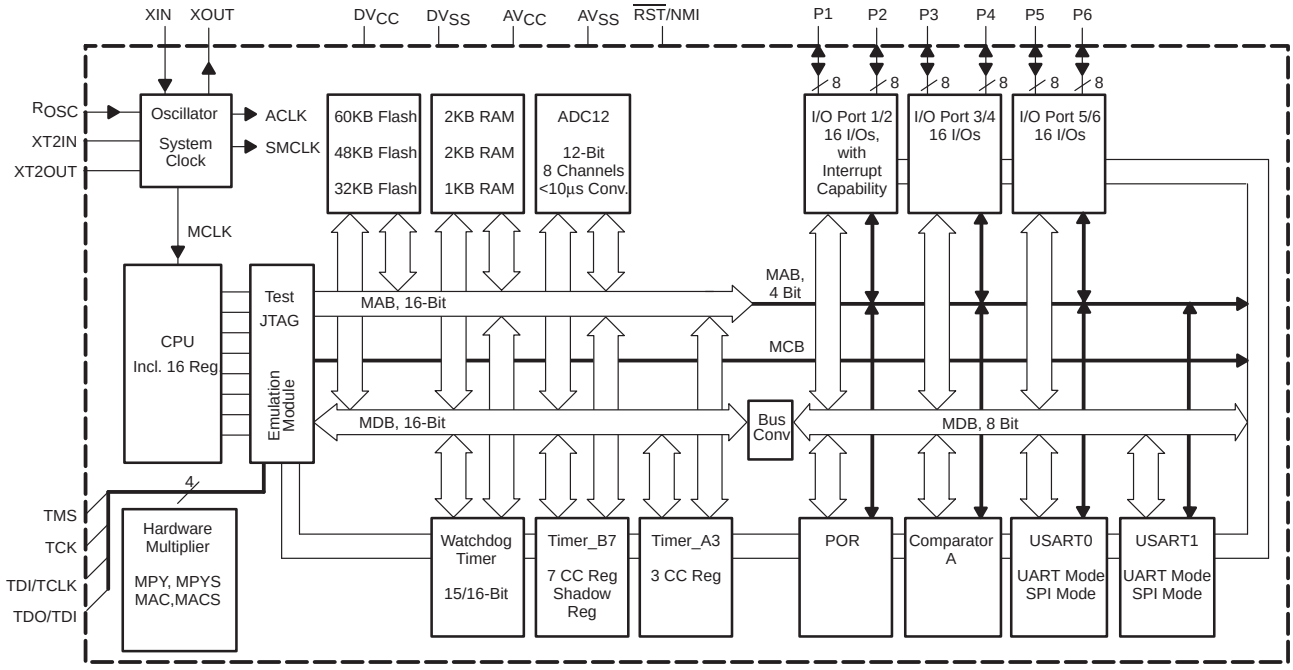

functional block diagrams (continued)

MSP430x14x1

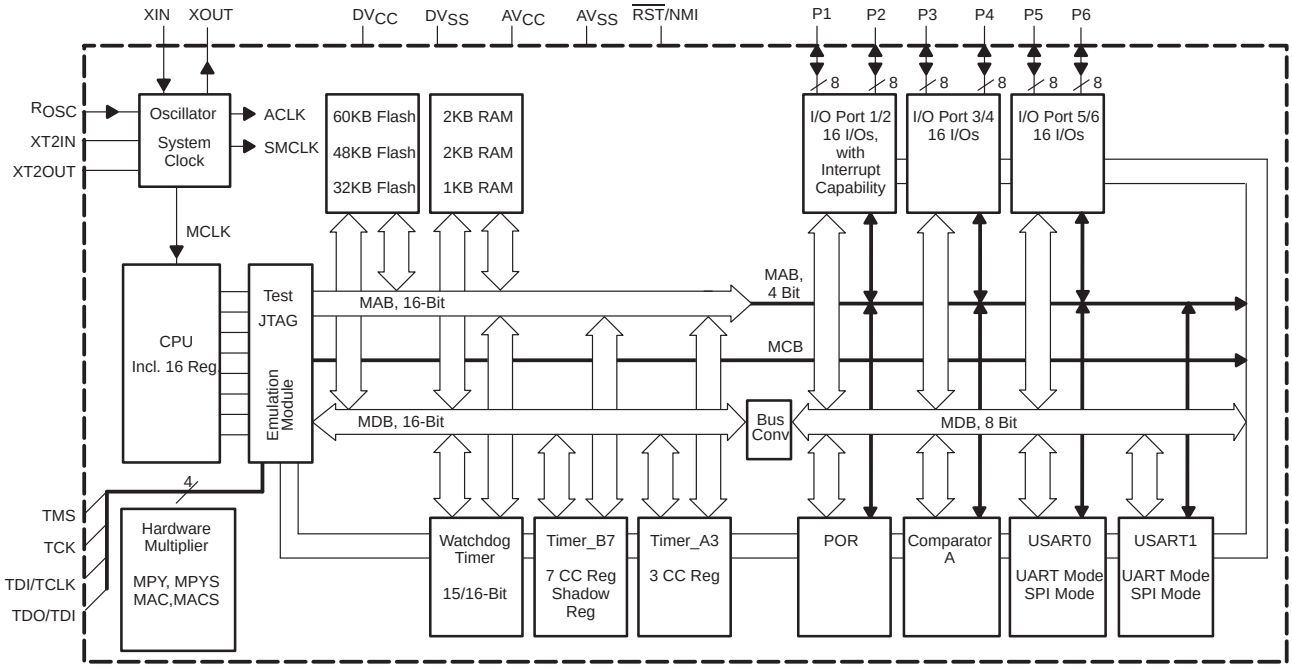

Terminal Functions

MSP430x13x, MSP430x14x

TERMINAL NAME	NO.	I/O	DESCRIPTION
AV_{CC}	64		Analog supply voltage, positive terminal. Supplies the analog portion of the analog-to-digital converter.
AV_{SS}	62		Analog supply voltage, negative terminal. Supplies the analog portion of the analog-to-digital converter.
DV_{CC}	1		Digital supply voltage, positive terminal. Supplies all digital parts.
DV_{SS}	63		Digital supply voltage, negative terminal. Supplies all digital parts.
P1.0/TACLK	12	I/O	General-purpose digital I/O pin/Timer_A, clock signal TACLK input
P1.1/TA0	13	I/O	General-purpose digital I/O pin/Timer_A, capture: CCI0A input, compare: Out0 output/BSL transmit
P1.2/TA1	14	I/O	General-purpose digital I/O pin/Timer_A, capture: CCI1A input, compare: Out1 output
P1.3/TA2	15	I/O	General-purpose digital I/O pin/Timer_A, capture: CCI2A input, compare: Out2 output
P1.4/SMCLK	16	I/O	General-purpose digital I/O pin/SMCLK signal output
P1.5/TA0	17	I/O	General-purpose digital I/O pin/Timer_A, compare: Out0 output
P1.6/TA1	18	I/O	General-purpose digital I/O pin/Timer_A, compare: Out1 output
P1.7/TA2	19	I/O	General-purpose digital I/O pin/Timer_A, compare: Out2 output/
P2.0/ACLK	20	I/O	General-purpose digital I/O pin/ACLK output
P2.1/TAINCLK	21	I/O	General-purpose digital I/O pin/Timer_A, clock signal at INCLK
P2.2/CAOUT/TA0	22	I/O	General-purpose digital I/O pin/Timer_A, capture: CCI0B input/Comparator_A output/BSL receive
P2.3/CA0/TA1	23	I/O	General-purpose digital I/O pin/Timer_A, compare: Out1 output/Comparator_A input
P2.4/CA1/TA2	24	I/O	General-purpose digital I/O pin/Timer_A, compare: Out2 output/Comparator_A input
P2.5/R_{OSC}	25	I/O	General-purpose digital I/O pin/input for external resistor defining the DCO nominal frequency
P2.6/ADC12CLK	26	I/O	General-purpose digital I/O pin/conversion clock – 12-bit ADC
P2.7/TA0	27	I/O	General-purpose digital I/O pin/Timer_A, compare: Out0 output
P3.0/STE0	28	I/O	General-purpose digital I/O pin/slave transmit enable – USART0/SPI mode
P3.1/SIMO0	29	I/O	General-purpose digital I/O pin/slave in/master out of USART0/SPI mode
P3.2/SOMI0	30	I/O	General-purpose digital I/O pin/slave out/master in of USART0/SPI mode
P3.3/UCLK0	31	I/O	General-purpose digital I/O/USART0 clock: external input − UART or SPI mode, output – SPI mode
P3.4/UTXD0	32	I/O	General-purpose digital I/O pin/transmit data out – USART0/UART mode
P3.5/URXD0	33	I/O	General-purpose digital I/O pin/receive data in – USART0/UART mode
P3.6/UTXD1†	34	I/O	General-purpose digital I/O pin/transmit data out – USART1/UART mode
P3.7/URXD1†	35	I/O	General-purpose digital I/O pin/receive data in – USART1/UART mode
P4.0/TB0	36	I/O	General-purpose digital I/O pin/Timer_B, capture: CCI0A or CCI0B input, compare: Out0 output
P4.1/TB1	37	I/O	General-purpose digital I/O pin/Timer_B, capture: CCI1A or CCI1B input, compare: Out1 output
P4.2/TB2	38	I/O	General-purpose digital I/O pin/Timer_B, capture: CCI2A or CCI2B input, compare: Out2 output
P4.3/TB3†	39	I/O	General-purpose digital I/O pin/Timer_B, capture: CCI3A or CCI3B input, compare: Out3 output
P4.4/TB4†	40	I/O	General-purpose digital I/O pin/Timer_B, capture: CCI4A or CCI4B input, compare: Out4 output
P4.5/TB5†	41	I/O	General-purpose digital I/O pin/Timer_B, capture: CCI5A or CCI5B input, compare: Out5 output
P4.6/TB6†	42	I/O	General-purpose digital I/O pin/Timer_B, capture: CCI6A or CCI6B input, compare: Out6 output
P4.7/TBCLK	43	I/O	General-purpose digital I/O pin/Timer_B, clock signal TBCLK input
P5.0/STE1†	44	I/O	General-purpose digital I/O pin/slave transmit enable – USART1/SPI mode
P5.1/SIMO1†	45	I/O	General-purpose digital I/O pin/slave in/master out of USART1/SPI mode
P5.2/SOMI1†	46	I/O	General-purpose digital I/O pin/slave out/master in of USART1/SPI mode
P5.3/UCLK1†	47	I/O	General-purpose digital I/O pin/USART1 clock: external input − UART or SPI mode, output – SPI mode
P5.4/MCLK	48	I/O	General-purpose digital I/O pin/main system clock MCLK output
P5.5/SMCLK	49	I/O	General-purpose digital I/O pin/submain system clock SMCLK output

† 14x devices only

Terminal Functions (Continued)

MSP430x13x, MSP430x14x (continued)

TERMINAL NAME	TERMINAL NO.	I/O	DESCRIPTION
P5.6/ACLK	50	I/O	General-purpose digital I/O pin/auxiliary clock ACLK output
P5.7/TBOUTH	51	I/O	General-purpose digital I/O pin/switch all PWM digital output ports to high impedance − Timer_B7: TB0 to TB6
P6.0/A0	59	I/O	General-purpose digital I/O pin/analog input a0 – 12-bit ADC
P6.1/A1	60	I/O	General-purpose digital I/O pin/analog input a1 – 12-bit ADC
P6.2/A2	61	I/O	General-purpose digital I/O pin/analog input a2 – 12-bit ADC
P6.3/A3	2	I/O	General-purpose digital I/O pin/analog input a3 – 12-bit ADC
P6.4/A4	3	I/O	General-purpose digital I/O pin/analog input a4 – 12-bit ADC
P6.5/A5	4	I/O	General-purpose digital I/O pin/analog input a5 – 12-bit ADC
P6.6/A6	5	I/O	General-purpose digital I/O pin/analog input a6 – 12-bit ADC
P6.7/A7	6	I/O	General-purpose digital I/O pin/analog input a7 – 12-bit ADC
$\overline{\text{RST}}$/NMI	58	I	Reset input, nonmaskable interrupt input port, or bootstrap loader start (in Flash devices).
TCK	57	I	Test clock. TCK is the clock input port for device programming test and bootstrap loader start (in Flash devices).
TDI/TCLK	55	I	Test data input or test clock input. The device protection fuse is connected to TDI/TCLK.
TDO/TDI	54	I/O	Test data output port. TDO/TDI data output or programming data input terminal
TMS	56	I	Test mode select. TMS is used as an input port for device programming and test.
V_{eREF+}	10	I	Input for an external reference voltage to the ADC
V_{REF+}	7	O	Output of positive terminal of the reference voltage in the ADC
V_{REF-}/V_{eREF-}	11	I	Negative terminal for the ADC's reference voltage for both sources, the internal reference voltage, or an external applied reference voltage
XIN	8	I	Input port for crystal oscillator XT1. Standard or watch crystals can be connected.
XOUT	9	O	Output terminal of crystal oscillator XT1
XT2IN	53	I	Input port for crystal oscillator XT2. Only standard crystals can be connected.
XT2OUT	52	O	Output terminal of crystal oscillator XT2
QFN Pad	NA	NA	QFN package pad connection to DV_{SS} recommended.

Terminal Functions

MSP430x14x1

TERMINAL NAME	NO.	I/O	DESCRIPTION
AV_{CC}	64		Analog supply voltage, positive terminal.
AV_{SS}	62		Analog supply voltage, negative terminal.
DV_{CC}	1		Digital supply voltage, positive terminal. Supplies all digital parts.
DV_{SS}	63		Digital supply voltage, negative terminal. Supplies all digital parts.
P1.0/TACLK	12	I/O	General-purpose digital I/O pin/Timer_A, clock signal TACLK input
P1.1/TA0	13	I/O	General-purpose digital I/O pin/Timer_A, capture: CCI0A input, compare: Out0 output/BSL transmit
P1.2/TA1	14	I/O	General-purpose digital I/O pin/Timer_A, capture: CCI1A input, compare: Out1 output
P1.3/TA2	15	I/O	General-purpose digital I/O pin/Timer_A, capture: CCI2A input, compare: Out2 output
P1.4/SMCLK	16	I/O	General-purpose digital I/O pin/SMCLK signal output
P1.5/TA0	17	I/O	General-purpose digital I/O pin/Timer_A, compare: Out0 output
P1.6/TA1	18	I/O	General-purpose digital I/O pin/Timer_A, compare: Out1 output
P1.7/TA2	19	I/O	General-purpose digital I/O pin/Timer_A, compare: Out2 output
P2.0/ACLK	20	I/O	General-purpose digital I/O pin/ACLK output
P2.1/TAINCLK	21	I/O	General-purpose digital I/O pin/Timer_A, clock signal at INCLK
P2.2/CAOUT/TA0	22	I/O	General-purpose digital I/O pin/Timer_A, capture: CCI0B input/Comparator_A output/BSL receive
P2.3/CA0/TA1	23	I/O	General-purpose digital I/O pin/Timer_A, compare: Out1 output/Comparator_A input
P2.4/CA1/TA2	24	I/O	General-purpose digital I/O pin/Timer_A, compare: Out2 output/Comparator_A input
P2.5/R_{OSC}	25	I/O	General-purpose digital I/O pin/input for external resistor defining the DCO nominal frequency
P2.6	26	I/O	General-purpose digital I/O pin
P2.7/TA0	27	I/O	General-purpose digital I/O pin/Timer_A, compare: Out0 output
P3.0/STE0	28	I/O	General-purpose digital I/O pin/slave transmit enable – USART0/SPI mode
P3.1/SIMO0	29	I/O	General-purpose digital I/O pin/slave in/master out of USART0/SPI mode
P3.2/SOMI0	30	I/O	General-purpose digital I/O pin/slave out/master in of USART0/SPI mode
P3.3/UCLK0	31	I/O	General-purpose digital I/O/USART0 clock: external input − UART or SPI mode, output – SPI mode
P3.4/UTXD0	32	I/O	General-purpose digital I/O pin/transmit data out – USART0/UART mode
P3.5/URXD0	33	I/O	General-purpose digital I/O pin/receive data in – USART0/UART mode
P3.6/UTXD1	34	I/O	General-purpose digital I/O pin/transmit data out – USART1/UART mode
P3.7/URXD1	35	I/O	General-purpose digital I/O pin/receive data in – USART1/UART mode
P4.0/TB0	36	I/O	General-purpose digital I/O pin/Timer_B, capture: CCI0A or CCI0B input, compare: Out0 output
P4.1/TB1	37	I/O	General-purpose digital I/O pin/Timer_B, capture: CCI1A or CCI1B input, compare: Out1 output
P4.2/TB2	38	I/O	General-purpose digital I/O pin/Timer_B, capture: CCI2A or CCI2B input, compare: Out2 output
P4.3/TB3	39	I/O	General-purpose digital I/O pin/Timer_B, capture: CCI3A or CCI3B input, compare: Out3 output
P4.4/TB4	40	I/O	General-purpose digital I/O pin/Timer_B, capture: CCI4A or CCI4B input, compare: Out4 output
P4.5/TB5	41	I/O	General-purpose digital I/O pin/Timer_B, capture: CCI5A or CCI5B input, compare: Out5 output
P4.6/TB6	42	I/O	General-purpose digital I/O pin/Timer_B, capture: CCI6A or CCI6B input, compare: Out6 output
P4.7/TBCLK	43	I/O	General-purpose digital I/O pin/Timer_B, clock signal TBCLK input
P5.0/STE1	44	I/O	General-purpose digital I/O pin/slave transmit enable – USART1/SPI mode
P5.1/SIMO1	45	I/O	General-purpose digital I/O pin/slave in/master out of USART1/SPI mode
P5.2/SOMI1	46	I/O	General-purpose digital I/O pin/slave out/master in of USART1/SPI mode
P5.3/UCLK1	47	I/O	General-purpose digital I/O pin/USART1 clock: external input − UART or SPI mode, output – SPI mode
P5.4/MCLK	48	I/O	General-purpose digital I/O pin/main system clock MCLK output
P5.5/SMCLK	49	I/O	General-purpose digital I/O pin/submain system clock SMCLK output

Terminal Functions (Continued)

MSP430x14x1 (continued)

TERMINAL NAME	TERMINAL NO.	I/O	DESCRIPTION
P5.6/ACLK	50	I/O	General-purpose digital I/O pin/auxiliary clock ACLK output
P5.7/TBOUTH	51	I/O	General-purpose digital I/O pin/switch all PWM digital output ports to high impedance − Timer_B7: TB0 to TB6
P6.0	59	I/O	General-purpose digital I/O pin
P6.1	60	I/O	General-purpose digital I/O pin
P6.2	61	I/O	General-purpose digital I/O pin
P6.3	2	I/O	General-purpose digital I/O pin
P6.4	3	I/O	General-purpose digital I/O pin
P6.5	4	I/O	General-purpose digital I/O pin
P6.6	5	I/O	General-purpose digital I/O pin
P6.7	6	I/O	General-purpose digital I/O pin
$\overline{\text{RST}}$/NMI	58	I	Reset input, nonmaskable interrupt input port, or bootstrap loader start (in Flash devices).
TCK	57	I	Test clock. TCK is the clock input port for device programming test and bootstrap loader start (in Flash devices).
TDI/TCLK	55	I	Test data input or test clock input. The device protection fuse is connected to TDI/TCLK.
TDO/TDI	54	I/O	Test data output port. TDO/TDI data output or programming data input terminal
TMS	56	I	Test mode select. TMS is used as an input port for device programming and test.
DV_{SS}	10	I	Connect to DV_{SS}
Reserved	7		Reserved, do not connect externally
DV_{SS}	11	I	Connect to DV_{SS}
XIN	8	I	Input port for crystal oscillator XT1. Standard or watch crystals can be connected.
XOUT	9	O	Output terminal of crystal oscillator XT1
XT2IN	53	I	Input port for crystal oscillator XT2. Only standard crystals can be connected.
XT2OUT	52	O	Output terminal of crystal oscillator XT2
QFN Pad	NA	NA	QFN package pad connection to DV_{SS} recommended.

short-form description

CPU

The MSP430 CPU has a 16-bit RISC architecture that is highly transparent to the application. All operations, other than program-flow instructions, are performed as register operations in conjunction with seven addressing modes for source operand and four addressing modes for destination operand.

The CPU is integrated with 16 registers that provide reduced instruction execution time. The register-to-register operation execution time is one cycle of the CPU clock.

Four of the registers, R0 to R3, are dedicated as program counter, stack pointer, status register, and constant generator respectively. The remaining registers are general-purpose registers.

Peripherals are connected to the CPU using data, address, and control buses, and can be handled with all instructions.

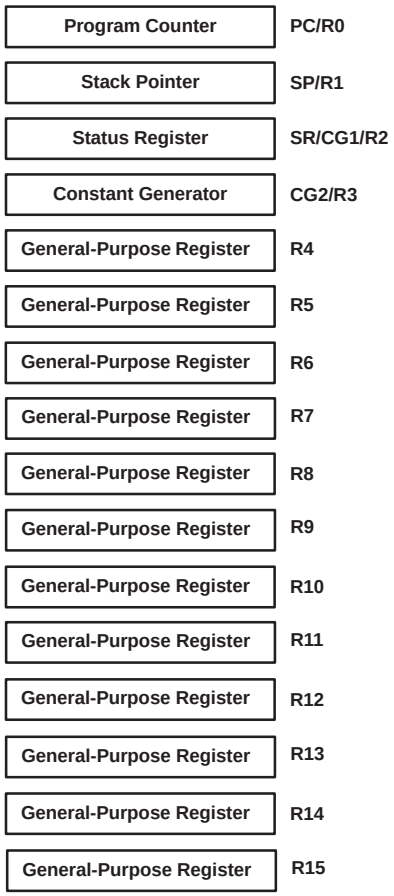

instruction set

The instruction set consists of 51 instructions with three formats and seven address modes. Each instruction can operate on word and byte data. Table 1 shows examples of the three types of instruction formats; the address modes are listed in Table 2.

Table 1. Instruction Word Formats

Dual operands, source-destination	e.g. ADD R4,R5	R4 + R5 −−−> R5
Single operands, destination only	e.g. CALL R8	PC −−>(TOS), R8−−> PC
Relative jump, un/conditional	e.g. JNE	Jump-on-equal bit = 0

Table 2. Address Mode Descriptions

ADDRESS MODE	S	D	SYNTAX	EXAMPLE	OPERATION
Register	●	●	MOV Rs,Rd	MOV R10,R11	R10 −−> R11
Indexed	●	●	MOV X(Rn),Y(Rm)	MOV 2(R5),6(R6)	M(2+R5)−−> M(6+R6)
Symbolic (PC relative)	●	●	MOV EDE,TONI		M(EDE) −−> M(TONI)
Absolute	●	●	MOV &MEM,&TCDAT		M(MEM) −−> M(TCDAT)
Indirect	●		MOV @Rn,Y(Rm)	MOV @R10,Tab(R6)	M(R10) −−> M(Tab+R6)
Indirect autoincrement	●		MOV @Rn+,Rm	MOV @R10+,R11	M(R10) −−> R11 R10 + 2−−> R10
Immediate	●		MOV #X,TONI	MOV #45,TONI	#45 −−> M(TONI)

NOTE: S = source D = destination

operating modes

The MSP430 has one active mode and five software selectable low-power modes of operation. An interrupt event can wake up the device from any of the five low-power modes, service the request and restore back to the low-power mode on return from the interrupt program.

The following six operating modes can be configured by software:

- Active mode AM;
  - All clocks are active
- Low-power mode 0 (LPM0);
  - CPU is disabled
    ACLK and SMCLK remain active. MCLK is disabled
- Low-power mode 1 (LPM1);
  - CPU is disabled
    ACLK and SMCLK remain active. MCLK is disabled
    DCO's dc-generator is disabled if DCO not used in active mode
- Low-power mode 2 (LPM2);
  - CPU is disabled
    MCLK and SMCLK are disabled
    DCO's dc-generator remains enabled
    ACLK remains active
- Low-power mode 3 (LPM3);
  - CPU is disabled
    MCLK and SMCLK are disabled
    DCO's dc-generator is disabled
    ACLK remains active
- Low-power mode 4 (LPM4);
  - CPU is disabled
    ACLK is disabled
    MCLK and SMCLK are disabled
    DCO's dc-generator is disabled
    Crystal oscillator is stopped

interrupt vector addresses

The interrupt vectors and the power-up starting address are located in the address range 0FFFFh − 0FFE0h. The vector contains the 16-bit address of the appropriate interrupt-handler instruction sequence.

INTERRUPT SOURCE	INTERRUPT FLAG	SYSTEM INTERRUPT	WORD ADDRESS	PRIORITY
Power-up External Reset Watchdog Flash memory	WDTIFG KEYV (see Note 1)	Reset	0FFFEh	15, highest
NMI Oscillator Fault Flash memory access violation	NMIIFG (see Notes 1 & 4) OFIFG (see Notes 1 & 4) ACCVIFG (see Notes 1 & 4)	(Non)maskable (Non)maskable (Non)maskable	0FFFCh	14
Timer_B7 (see Note 5)	TBCCR0 CCIFG (see Note 2)	Maskable	0FFFAh	13
Timer_B7 (see Note 5)	TBCCR1 to 6 CCIFGs, TBIFG (see Notes 1 & 2)	Maskable	0FFF8h	12
Comparator_A	CAIFG	Maskable	0FFF6h	11
Watchdog timer	WDTIFG	Maskable	0FFF4h	10
USART0 receive	URXIFG0	Maskable	0FFF2h	9
USART0 transmit	UTXIFG0	Maskable	0FFF0h	8
ADC12 (see Note 6)	ADC12IFG (see Notes 1 & 2)	Maskable	0FFEEh	7
Timer_A3	TACCR0 CCIFG (see Note 2)	Maskable	0FFECh	6
Timer_A3	TACCR1 CCIFG, TACCR2 CCIFG, TAIFG (see Notes 1 & 2)	Maskable	0FFEAh	5
I/O port P1 (eight flags)	P1IFG.0 to P1IFG.7 (see Notes 1 & 2)	Maskable	0FFE8h	4
USART1 receive	URXIFG1	Maskable	0FFE6h	3
USART1 transmit	UTXIFG1		0FFE4h	2
I/O port P2 (eight flags)	P2IFG.0 to P2IFG.7 (see Notes 1 & 2)	Maskable	0FFE2h	1
			0FFE0h	0, lowest

NOTES:
1. Multiple source flags
2. Interrupt flags are located in the module.
3. Nonmaskable: neither the individual nor the general interrupt-enable bit will disable an interrupt event.
4. (Non)maskable: the individual interrupt-enable bit can disable an interrupt event, but the general-interrupt enable can not disable it.
5. Timer_B7 in MSP430x14x(1) family has 7 CCRs; Timer_B3 in MSP430x13x family has 3 CCRs. In Timer_B3 there are only interrupt flags TBCCR0, 1, and 2 CCIFGs and the interrupt-enable bits TBCCTL0, 1, and 2 CCIEs.
6. ADC12 is not implemented on the 14x1 devices.

special function registers

Most interrupt and module-enable bits are collected in the lowest address space. Special-function register bits not allocated to a functional purpose are not physically present in the device. This arrangement provides simple software access.

interrupt enable 1 and 2

Address	7	6	5	4	3	2	1	0
0h	UTXIE0	URXIE0	ACCVIE	NMIIE			OFIE	WDTIE
	rw-0	rw-0	rw-0	rw-0			rw-0	rw-0

WDTIE: Watchdog-timer interrupt enable. Inactive if watchdog mode is selected. Active if watchdog timer is configured in interval timer mode.

OFIE: Oscillator-fault-interrupt enable

NMIIE: Nonmaskable-interrupt enable

ACCVIE: Flash access violation interrupt enable

URXIE0: USART0: UART and SPI receive-interrupt enable

UTXIE0: USART0: UART and SPI transmit-interrupt enable

Address	7	6	5	4	3	2	1	0
01h			UTXIE1	URXIE1				
			rw-0	rw-0				

URXIE1: USART1: UART and SPI receive-interrupt enable

UTXIE1: USART1: UART and SPI transmit-interrupt enable

interrupt flag register 1 and 2

Address	7	6	5	4	3	2	1	0
02h	UTXIFG0	URXIFG0		NMIIFG			OFIFG	WDTIFG
	rw-1	rw-0		rw-0			rw-1	rw-(0)

WDTIFG: Set on watchdog timer overflow (in watchdog mode) or security key violation. Reset on V_{CC} power up or a reset condition at the $\overline{RST}$/NMI pin in reset mode.

OFIFG: Flag set on oscillator fault

NMIIFG: Set via $\overline{RST}$/NMI pin

URXIFG0: USART0: UART and SPI receive flag

UTXIFG0: USART0: UART and SPI transmit flag

Address	7	6	5	4	3	2	1	0
03h			UTXIFG1	URXIFG1				
			rw-1	rw-0				

URXIFG1: USART1: UART and SPI receive flag

UTXIFG1: USART1: UART and SPI transmit flag

module enable registers 1 and 2

Address	7	6	5	4	3	2	1	0
04h	UTXE0	URXE0 USPIE0						
	rw-0	rw-0						

URXE0: USART0: UART receive enable

UTXE0: USART0: UART transmit enable

USPIE0: USART0: SPI (synchronous peripheral interface) transmit and receive enable

Address	7	6	5	4	3	2	1	0
05h			UTXE1	URXE1 USPIE1				
			rw-0	rw-0				

URXE1: USART1: UART receive enable

UTXE1: USART1: UART transmit enable

USPIE1: USART1: SPI (synchronous peripheral interface) transmit and receive enable

Legend: rw: **Bit Can Be Read and Written**
rw-0: **Bit Can Be Read and Written. It Is Reset by PUC.**
SFR Bit Not Present in Device

memory organization

		MSP430F133	MSP430F135	MSP430F147 MSP430F1471	MSP430F148 MSP430F1481	MSP430F149 MSP430F1491
Memory Main: interrupt vector Main: code memory	Size Flash Flash	8KB 0FFFFh − 0FFE0h 0FFFFh − 0E000h	16KB 0FFFFh − 0FFE0h 0FFFFh − 0C000h	32KB 0FFFFh − 0FFE0h 0FFFFh − 08000h	48KB 0FFFFh − 0FFE0h 0FFFFh − 04000h	60KB 0FFFFh − 0FFE0h 0FFFFh − 01100h
Information memory	Size Flash	256 Byte 010FFh − 01000h	256 Byte 010FFh − 01000h	256 Byte 010FFh − 01000h	256 Byte 010FFh − 01000h	256 Byte 010FFh − 01000h
Boot memory	Size ROM	1KB 0FFFh − 0C00h	1KB 0FFFh − 0C00h	1KB 0FFFh − 0C00h	1KB 0FFFh − 0C00h	1KB 0FFFh − 0C00h
RAM	Size	256 Byte 02FFh − 0200h	512 Byte 03FFh − 0200h	1KB 05FFh − 0200h	2KB 09FFh − 0200h	2KB 09FFh − 0200h
Peripherals	16-bit 8-bit 8-bit SFR	01FFh − 0100h 0FFh − 010h 0Fh − 00h	01FFh − 0100h 0FFh − 010h 0Fh − 00h	01FFh − 0100h 0FFh − 010h 0Fh − 00h	01FFh − 0100h 0FFh − 010h 0Fh − 00h	01FFh − 0100h 0FFh − 010h 0Fh − 00h

bootstrap loader (BSL)

The MSP430 bootstrap loader (BSL) enables users to program the flash memory or RAM using a UART serial interface. Access to the MSP430 memory via the BSL is protected by user-defined password. For complete description of the features of the BSL and its implementation, see the Application report *Features of the MSP430 Bootstrap Loader*, Literature Number SLAA089.

BSL Function	PM, PAG & RTD Package Pins
Data Transmit	13 - P1.1
Data Receive	22 - P2.2

flash memory

The flash memory can be programmed via the JTAG port, the bootstrap loader, or in-system by the CPU. The CPU can perform single-byte and single-word writes to the flash memory. Features of the flash memory include:

- Flash memory has n segments of main memory and two segments of information memory (A and B) of 128 bytes each. Each segment in main memory is 512 bytes in size.
- Segments 0 to n may be erased in one step, or each segment may be individually erased.
- Segments A and B can be erased individually, or as a group with segments 0−n.
  Segments A and B are also called *information memory.*
- New devices may have some bytes programmed in the information memory (needed for test during manufacturing). The user should perform an erase of the information memory prior to the first use.

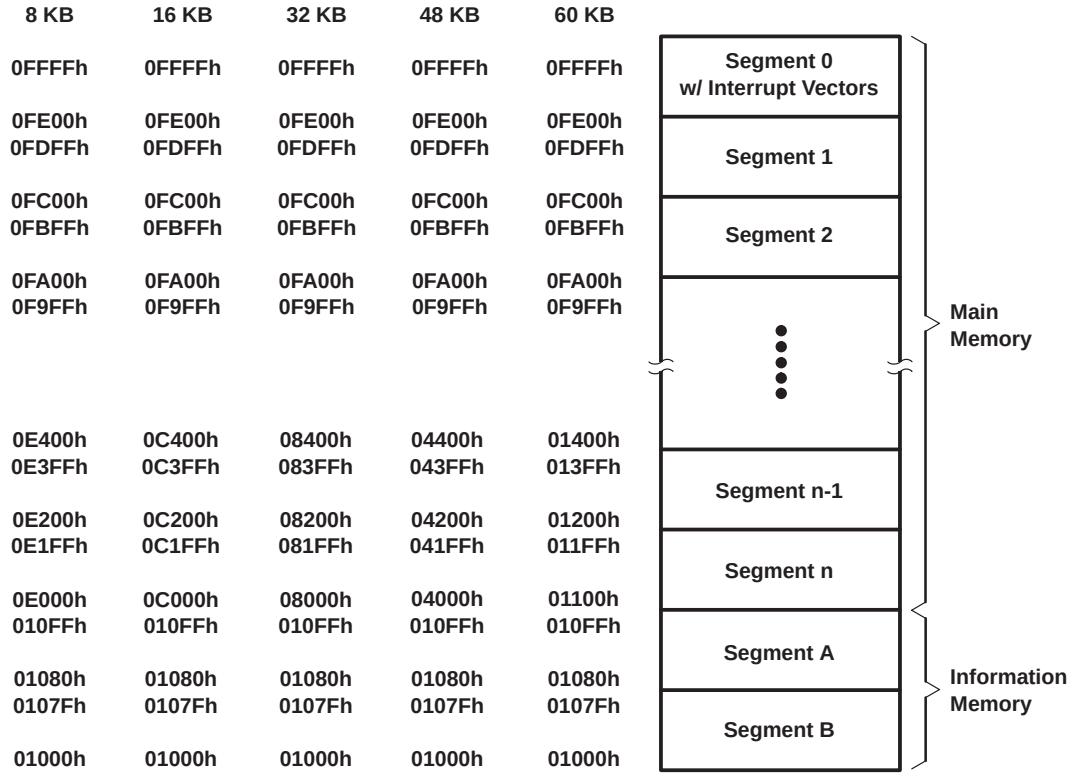

peripherals

Peripherals are connected to the CPU through data, address, and control busses and can be handled using all instructions. For complete module descriptions, see the *MSP430x1xx Family User's Guide*, literature number SLAU049.

digital I/O

There are six 8-bit I/O ports implemented—ports P1 through P6:

- All individual I/O bits are independently programmable.
- Any combination of input, output, and interrupt conditions is possible.
- Edge-selectable interrupt input capability for all the eight bits of ports P1 and P2.
- Read/write access to port-control registers is supported by all instructions.

oscillator and system clock

The clock system in the MSP430x13x and MSP43x14x(1) family of devices is supported by the basic clock module that includes support for a 32768-Hz watch crystal oscillator, an internal digitally-controlled oscillator (DCO) and a high frequency crystal oscillator. The basic clock module is designed to meet the requirements of both low system cost and low-power consumption. The internal DCO provides a fast turn-on clock source and stabilizes in less than 6 µs. The basic clock module provides the following clock signals:

- Auxiliary clock (ACLK), sourced from a 32768-Hz watch crystal or a high frequency crystal.
- Main clock (MCLK), the system clock used by the CPU.
- Sub-Main clock (SMCLK), the sub-system clock used by the peripheral modules.

watchdog timer

The primary function of the watchdog timer (WDT) module is to perform a controlled system restart after a software problem occurs. If the selected time interval expires, a system reset is generated. If the watchdog function is not needed in an application, the module can be configured as an interval timer and can generate interrupts at selected time intervals.

hardware multiplier (MSP430x14x and MSP430x14x1 Only)

The multiplication operation is supported by a dedicated peripheral module. The module performs 16×16, 16×8, 8×16, and 8×8 bit operations. The module is capable of supporting signed and unsigned multiplication as well as signed and unsigned multiply and accumulate operations. The result of an operation can be accessed immediately after the operands have been loaded into the peripheral registers. No additional clock cycles are required.

USART0

The MSP430x13x and the MSP430x14x(1) have one hardware universal synchronous/asynchronous receive transmit (USART0) peripheral module that is used for serial data communication. The USART supports synchronous SPI (3 or 4 pin) and asynchronous UART communication protocols, using double-buffered transmit and receive channels.

USART1 (MSP430x14x and MSP430x14x1 Only)

The MSP430x14x(1) has a second hardware universal synchronous/asynchronous receive transmit (USART1) peripheral module that is used for serial data communication. The USART supports synchronous SPI (3 or 4 pin) and asynchronous UART communication protocols, using double-buffered transmit and receive channels. Operation of USART1 is identical to USART0.

comparator_A

The primary function of the comparator_A module is to support precision slope analog−to−digital conversions, battery−voltage supervision, and monitoring of external analog signals.

ADC12 (Not implemented in the MSP430x14x1)

The ADC12 module supports fast, 12-bit analog-to-digital conversions. The module implements a 12-bit SAR core, sample select control, reference generator and a 16 word conversion-and-control buffer. The conversion-and-control buffer allows up to 16 independent ADC samples to be converted and stored without any CPU intervention.

timer_A3

Timer_A3 is a 16-bit timer/counter with three capture/compare registers. Timer_A3 can support multiple capture/compares, PWM outputs, and interval timing. Timer_A3 also has extensive interrupt capabilities. Interrupts may be generated from the counter on overflow conditions and from each of the capture/compare registers.

Timer_A3 Signal Connections					
Input Pin Number	**Device Input Signal**	**Module Input Name**	**Module Block**	**Module Output Signal**	**Output Pin Number**
12 - P1.0	TACLK	TACLK	Timer	NA	
	ACLK	ACLK			
	SMCLK	SMCLK			
21 - P2.1	TAINCLK	INCLK			
13 - P1.1	TA0	CCI0A	CCR0	TA0	13 - P1.1
22 - P2.2	TA0	CCI0B			17 - P1.5
	DV_{SS}	GND			27 - P2.7
	DV_{CC}	V_{CC}			
14 - P1.2	TA1	CCI1A	CCR1	TA1	14 - P1.2
	CAOUT (internal)	CCI1B			18 - P1.6
	DV_{SS}	GND			23 - P2.3
	DV_{CC}	V_{CC}			ADC12 (internal)
15 - P1.3	TA2	CCI2A	CCR2	TA2	15 - P1.3
	ACLK (internal)	CCI2B			19 - P1.7
	DV_{SS}	GND			24 - P2.4
	DV_{CC}	V_{CC}			

timer_B3 (MSP430x13x Only)

Timer_B3 is a 16-bit timer/counter with three capture/compare registers. Timer_B3 can support multiple capture/compares, PWM outputs, and interval timing. Timer_B3 also has extensive interrupt capabilities. Interrupts may be generated from the counter on overflow conditions and from each of the capture/compare registers.

timer_B7 (MSP430x14x and MSP430x14x1 Only)

Timer_B7 is a 16-bit timer/counter with seven capture/compare registers. Timer_B7 can support multiple capture/compares, PWM outputs, and interval timing. Timer_B7 also has extensive interrupt capabilities. Interrupts may be generated from the counter on overflow conditions and from each of the capture/compare registers.

Timer_B3/B7 Signal Connections†					
Input Pin Number	**Device Input Signal**	**Module Input Name**	**Module Block**	**Module Output Signal**	**Output Pin Number**
43 - P4.7	TBCLK	TBCLK	Timer	NA	
	ACLK	ACLK			
	SMCLK	SMCLK			
43 - P4.7	TBCLK	INCLK			
36 - P4.0	TB0	CCI0A	CCR0	TB0	36 - P4.0
36 - P4.0	TB0	CCI0B			ADC12 (internal)
	DV_{SS}	GND			
	DV_{CC}	V_{CC}			
37 - P4.1	TB1	CCI1A	CCR1	TB1	37 - P4.1
37 - P4.1	TB1	CCI1B			ADC12 (internal)
	DV_{SS}	GND			
	DV_{CC}	V_{CC}			
38 - P4.2	TB2	CCI2A	CCR2	TB2	38 - P4.2
38 - P4.2	TB2	CCI2B			
	DV_{SS}	GND			
	DV_{CC}	V_{CC}			
39 - P4.3	TB3	CCI3A	CCR3	TB3	39 - P4.3
39 - P4.3	TB3	CCI3B			
	DV_{SS}	GND			
	DV_{CC}	V_{CC}			
40 - P4.4	TB4	CCI4A	CCR4	TB4	40 - P4.4
40 - P4.4	TB4	CCI4B			
	DV_{SS}	GND			
	DV_{CC}	V_{CC}			
41 - P4.5	TB5	CCI5A	CCR5	TB5	41 - P4.5
41 - P4.5	TB5	CCI5B			
	DV_{SS}	GND			
	DV_{CC}	V_{CC}			
42 - P4.6	TB6	CCI6A	CCR6	TB6	42 - P4.6
	ACLK (internal)	CCI6B			
	DV_{SS}	GND			
	DV_{CC}	V_{CC}			

† Timer_B3 implements three capture/compare blocks (CCR0, CCR1 and CCR2 only).

peripheral file map

PERIPHERALS WITH WORD ACCESS			
Watchdog	Watchdog Timer control	WDTCTL	0120h
Timer_B7/ Timer_B3 (see Note 1)	Timer_B interrupt vector	TBIV	011Eh
	Timer_B control	TBCTL	0180h
	Capture/compare control 0	TBCCTL0	0182h
	Capture/compare control 1	TBCCTL1	0184h
	Capture/compare control 2	TBCCTL2	0186h
	Capture/compare control 3	TBCCTL3	0188h
	Capture/compare control 4	TBCCTL4	018Ah
	Capture/compare control 5	TBCCTL5	018Ch
	Capture/compare control 6	TBCCTL6	018Eh
	Timer_B register	TBR	0190h
	Capture/compare register 0	TBCCR0	0192h
	Capture/compare register 1	TBCCR1	0194h
	Capture/compare register 2	TBCCR2	0196h
	Capture/compare register 3	TBCCR3	0198h
	Capture/compare register 4	TBCCR4	019Ah
	Capture/compare register 5	TBCCR5	019Ch
	Capture/compare register 6	TBCCR6	019Eh
Timer_A3	Timer_A interrupt vector	TAIV	012Eh
	Timer_A control	TACTL	0160h
	Capture/compare control 0	TACCTL0	0162h
	Capture/compare control 1	TACCTL1	0164h
	Capture/compare control 2	TACCTL2	0166h
	Reserved		0168h
	Reserved		016Ah
	Reserved		016Ch
	Reserved		016Eh
	Timer_A register	TAR	0170h
	Capture/compare register 0	TACCR0	0172h
	Capture/compare register 1	TACCR1	0174h
	Capture/compare register 2	TACCR2	0176h
	Reserved		0178h
	Reserved		017Ah
	Reserved		017Ch
	Reserved		017Eh
Hardware Multiplier (MSP430x14x and MSP430x14x1 only)	Sum extend	SUMEXT	013Eh
	Result high word	RESHI	013Ch
	Result low word	RESLO	013Ah
	Second operand	OP2	0138h
	Multiply signed +accumulate/operand1	MACS	0136h
	Multiply+accumulate/operand1	MAC	0134h
	Multiply signed/operand1	MPYS	0132h
	Multiply unsigned/operand1	MPY	0130h

NOTE 1: Timer_B7 in MSP430x14x(1) family has 7 CCRs, Timer_B3 in MSP430x13x family has 3 CCRs.

peripheral file map (continued)

PERIPHERALS WITH WORD ACCESS (CONTINUED)			
Flash	Flash control 3	FCTL3	012Ch
	Flash control 2	FCTL2	012Ah
	Flash control 1	FCTL1	0128h
ADC12 (Not implemented in the MSP430x14x1)	Conversion memory 15	ADC12MEM15	015Eh
	Conversion memory 14	ADC12MEM14	015Ch
	Conversion memory 13	ADC12MEM13	015Ah
	Conversion memory 12	ADC12MEM12	0158h
	Conversion memory 11	ADC12MEM11	0156h
	Conversion memory 10	ADC12MEM10	0154h
	Conversion memory 9	ADC12MEM9	0152h
	Conversion memory 8	ADC12MEM8	0150h
	Conversion memory 7	ADC12MEM7	014Eh
	Conversion memory 6	ADC12MEM6	014Ch
	Conversion memory 5	ADC12MEM5	014Ah
	Conversion memory 4	ADC12MEM4	0148h
	Conversion memory 3	ADC12MEM3	0146h
	Conversion memory 2	ADC12MEM2	0144h
	Conversion memory 1	ADC12MEM1	0142h
	Conversion memory 0	ADC12MEM0	0140h
	Interrupt-vector-word register	ADC12IV	01A8h
	Inerrupt-enable register	ADC12IE	01A6h
	Inerrupt-flag register	ADC12IFG	01A4h
	Control register 1	ADC12CTL1	01A2h
	Control register 0	ADC12CTL0	01A0h
	ADC memory-control register15	ADC12MCTL15	08Fh
	ADC memory-control register14	ADC12MCTL14	08Eh
	ADC memory-control register13	ADC12MCTL13	08Dh
	ADC memory-control register12	ADC12MCTL12	08Ch
	ADC memory-control register11	ADC12MCTL11	08Bh
	ADC memory-control register10	ADC12MCTL10	08Ah
	ADC memory-control register9	ADC12MCTL9	089h
	ADC memory-control register8	ADC12MCTL8	088h
	ADC memory-control register7	ADC12MCTL7	087h
	ADC memory-control register6	ADC12MCTL6	086h
	ADC memory-control register5	ADC12MCTL5	085h
	ADC memory-control register4	ADC12MCTL4	084h
	ADC memory-control register3	ADC12MCTL3	083h
	ADC memory-control register2	ADC12MCTL2	082h
	ADC memory-control register1	ADC12MCTL1	081h
	ADC memory-control register0	ADC12MCTL0	080h

peripheral file map (continued)

PERIPHERALS WITH BYTE ACCESS			
USART1 (MSP430x14x and MSP430x14x1 only)	Transmit buffer	U1TXBUF	07Fh
	Receive buffer	U1RXBUF	07Eh
	Baud rate	U1BR1	07Dh
	Baud rate	U1BR0	07Ch
	Modulation control	U1MCTL	07Bh
	Receive control	U1RCTL	07Ah
	Transmit control	U1TCTL	079h
	USART control	U1CTL	078h
USART0	Transmit buffer	U0TXBUF	077h
	Receive buffer	U0RXBUF	076h
	Baud rate	U0BR1	075h
	Baud rate	U0BR0	074h
	Modulation control	U0MCTL	073h
	Receive control	U0RCTL	072h
	Transmit control	U0TCTL	071h
	USART control	U0CTL	070h
Comparator_A	Comparator_A port disable	CAPD	05Bh
	Comparator_A control2	CACTL2	05Ah
	Comparator_A control1	CACTL1	059h
Basic Clock	Basic clock system control2	BCSCTL2	058h
	Basic clock system control1	BCSCTL1	057h
	DCO clock frequency control	DCOCTL	056h
Port P6	Port P6 selection	P6SEL	037h
	Port P6 direction	P6DIR	036h
	Port P6 output	P6OUT	035h
	Port P6 input	P6IN	034h
Port P5	Port P5 selection	P5SEL	033h
	Port P5 direction	P5DIR	032h
	Port P5 output	P5OUT	031h
	Port P5 input	P5IN	030h
Port P4	Port P4 selection	P4SEL	01Fh
	Port P4 direction	P4DIR	01Eh
	Port P4 output	P4OUT	01Dh
	Port P4 input	P4IN	01Ch
Port P3	Port P3 selection	P3SEL	01Bh
	Port P3 direction	P3DIR	01Ah
	Port P3 output	P3OUT	019h
	Port P3 input	P3IN	018h
Port P2	Port P2 selection	P2SEL	02Eh
	Port P2 interrupt enable	P2IE	02Dh
	Port P2 interrupt-edge select	P2IES	02Ch
	Port P2 interrupt flag	P2IFG	02Bh
	Port P2 direction	P2DIR	02Ah
	Port P2 output	P2OUT	029h
	Port P2 input	P2IN	028h

peripheral file map (continued)

PERIPHERALS WITH BYTE ACCESS (CONTINUED)			
Port P1	Port P1 selection	P1SEL	026h
	Port P1 interrupt enable	P1IE	025h
	Port P1 interrupt-edge select	P1IES	024h
	Port P1 interrupt flag	P1IFG	023h
	Port P1 direction	P1DIR	022h
	Port P1 output	P1OUT	021h
	Port P1 input	P1IN	020h
Special Functions	SFR module enable 2	ME2	005h
	SFR module enable 1	ME1	004h
	SFR interrupt flag2	IFG2	003h
	SFR interrupt flag1	IFG1	002h
	SFR interrupt enable2	IE2	001h
	SFR interrupt enable1	IE1	000h

absolute maximum ratings over operating free-air temperature (unless otherwise noted)†

Voltage applied at V_{CC} to V_{SS} . . . . . −0.3 V to + 4.1 V
Voltage applied to any pin (see Note) . . . . . −0.3 V to V_{CC}+0.3 V
Diode current at any device terminal . . . . . ±2 mA
Storage temperature (unprogrammed device) . . . . . −55°C to 150°C
Storage temperature (programmed device) . . . . . −40°C to 85°C

† Stresses beyond those listed under “absolute maximum ratings” may cause permanent damage to the device. These are stress ratings only, and functional operation of the device at these or any other conditions beyond those indicated under “recommended operating conditions” is not implied. Exposure to absolute-maximum-rated conditions for extended periods may affect device reliability.

NOTE: All voltages referenced to V_{SS}. The JTAG fuse-blow voltage, V_{FB}, is allowed to exceed the absolute maximum rating. The voltage is applied to the TDI/TCLK pin when blowing the JTAG fuse.

recommended operating conditions

PARAMETER			MIN	NOM	MAX	UNITS
Supply voltage during program execution, V_{CC} ($AV_{CC} = DV_{CC} = V_{CC}$)		MSP430F13x, MSP430F14x(1)	1.8		3.6	V
Supply voltage during flash memory programming, V_{CC} ($AV_{CC} = DV_{CC} = V_{CC}$)		MSP430F13x, MSP430F14x(1)	2.7		3.6	V
Supply voltage, V_{SS} ($AV_{SS} = DV_{SS} = V_{SS}$)			0.0		0.0	V
Operating free-air temperature range, T_A		MSP430x13x MSP430x14x(1)	−40		85	°C
LFXT1 crystal frequency, $f_{(LFXT1)}$ (see Notes 1 and 2)	LF selected, XTS=0	Watch crystal		32768		Hz
	XT1 selected, XTS=1	Ceramic resonator	450		8000	kHz
	XT1 selected, XTS=1	Crystal	1000		8000	kHz
XT2 crystal frequency, $f_{(XT2)}$		Ceramic resonator	450		8000	kHz
		Crystal	1000		8000	
Processor frequency (signal MCLK), $f_{(System)}$		V_{CC} = 1.8 V	DC		4.15	MHz
		V_{CC} = 3.6 V	DC		8	

NOTES: 1. In LF mode, the LFXT1 oscillator requires a watch crystal. A 5.1MΩ resistor from XOUT to V_{SS} is recommended when V_{CC} < 2.5 V. In XT1 mode, the LFXT1 and XT2 oscillators accept a ceramic resonator or crystal up to 4.15MHz at $V_{CC} \geq 2.2$ V. In XT1 mode, the LFXT1 and XT2 oscillators accept a ceramic resonator or crystal up to 8MHz at $V_{CC} \geq 2.8$ V.
2. In LF mode, the LFXT1 oscillator requires a watch crystal. In XT1 mode, LFXT1 accepts a ceramic resonator or a crystal.

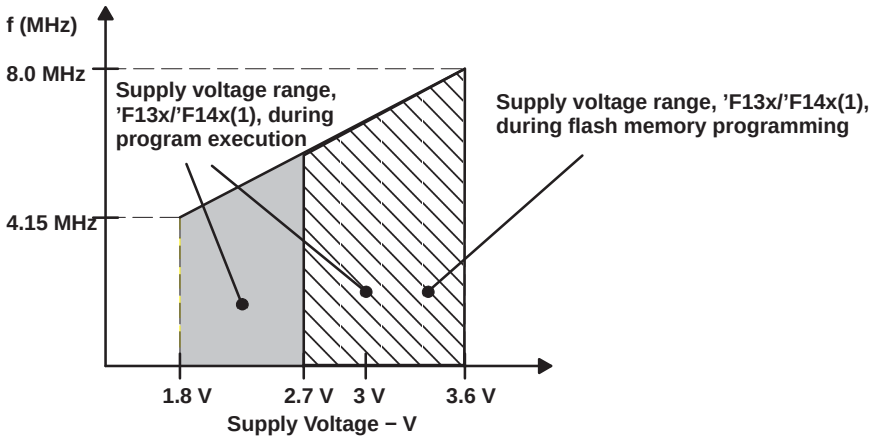

Figure 1. Frequency vs Supply Voltage, MSP430F13x or MSP430F14x(1)

electrical characteristics over recommended operating free-air temperature (unless otherwise noted)

supply current into AV_{CC} + DV_{CC} excluding external current

PARAMETER		TEST CONDITIONS		MIN	NOM	MAX	UNIT
$I_{(AM)}$	Active mode, (see Note 1) $f_{(MCLK)} = f_{(SMCLK)}$ = 1 MHz, $f_{(ACLK)}$ = 32,768 Hz XTS=0, SELM=(0,1)	T_A = −40°C to 85°C	V_{CC} = 2.2 V		280	350	µA
			V_{CC} = 3 V		420	560	
$I_{(AM)}$	Active mode, (see Note 1) $f_{(MCLK)} = f_{(SMCLK)}$ = 4 096 Hz, $f_{(ACLK)}$ = 4,096 Hz XTS=0, SELM=(0,1) XTS=0, SELM=3	T_A = −40°C to 85°C	V_{CC} = 2.2 V		2.5	7	µA
			V_{CC} = 3 V		9	20	
$I_{(LPM0)}$	Low-power mode, (LPM0) (see Note 1)	T_A = −40°C to 85°C	V_{CC} = 2.2 V		32	45	µA
			V_{CC} = 3 V		55	70	
$I_{(LPM2)}$	Low-power mode, (LPM2), f(MCLK) = f (SMCLK) = 0 MHz, f(ACLK) = 32.768 Hz, SCG0 = 0	T_A = −40°C to 85°C	V_{CC} = 2.2 V		11	14	µA
			V_{CC} = 3 V		17	22	
$I_{(LPM3)}$	Low-power mode, (LPM3) $f_{(MCLK)} = f_{(SMCLK)}$ = 0 MHz, $f_{(ACLK)}$ = 32,768 Hz, SCG0 = 1 (see Note 2)	T_A = −40°C	V_{CC} = 2.2 V		0.8	1.5	µA
		T_A = 25°C			0.9	1.5	
		T_A = 85°C			1.6	2.8	
		T_A = −40°C	V_{CC} = 3 V		1.8	2.2	µA
		T_A = 25°C			1.6	1.9	
		T_A = 85°C			2.3	3.9	
$I_{(LPM4)}$	Low-power mode, (LPM4) $f_{(MCLK)}$ = 0 MHz, $f_{(SMCLK)}$ = 0 MHz, $f_{(ACLK)}$ = 0 Hz, SCG0 = 1	T_A = −40°C	V_{CC} = 2.2 V		0.1	0.5	µA
		T_A = 25°C			0.1	0.5	
		T_A = 85°C			0.8	2.5	
		T_A = −40°C	V_{CC} = 3 V		0.1	0.5	µA
		T_A = 25°C			0.1	0.5	
		T_A = 85°C			0.8	2.5	

NOTES: 1. Timer_B is clocked by f(DCOCLK) = 1 MHz. All inputs are tied to 0 V or to V_{CC}. Outputs do not source or sink any current.
2. Timer_B is clocked by f(ACLK) = 32,768 Hz. All inputs are tied to 0 V or to V_{CC}. Outputs do not source or sink any current. The current consumption in LPM2 and LPM3 are measured with ACLK selected.

Current consumption of active mode versus system frequency, F-version

$$I(AM) = I(AM)\ [1\ MHz] \times f(System)\ [MHz]$$

Current consumption of active mode versus supply voltage, F-version

$$I_{(AM)} = I_{(AM)\ [3\ V]} + 175\ \mu A/V \times (V_{CC} - 3\ V)$$

electrical characteristics over recommended operating free-air temperature (unless otherwise noted) (continued)

SCHMITT-trigger inputs − Ports P1, P2, P3, P4, P5, and P6

PARAMETER		TEST CONDITIONS	MIN	TYP	MAX	UNIT
V_{IT+}	Positive-going input threshold voltage	V_{CC} = 2.2 V	1.1		1.5	V
		V_{CC} = 3 V	1.5		1.9	
V_{IT-}	Negative-going input threshold voltage	V_{CC} = 2.2 V	0.4		0.9	V
		V_{CC} = 3 V	0.90		1.3	
V_{hys}	Input voltage hysteresis ($V_{IT+} - V_{IT-}$)	V_{CC} = 2.2 V	0.3		1.1	V
		V_{CC} = 3 V	0.5		1	

standard inputs − $\overline{RST}$/NMI; JTAG: TCK, TMS, TDI/TCLK, TDO/TDI

PARAMETER		TEST CONDITIONS	MIN	TYP	MAX	UNIT
V_{IL}	Low-level input voltage	V_{CC} = 2.2 V / 3 V	V_{SS}		V_{SS}+0.6	V
V_{IH}	High-level input voltage		0.8×V_{CC}		V_{CC}	V

inputs Px.x, TAx, TBx

PARAMETER		TEST CONDITIONS	V_{CC}	MIN	TYP	MAX	UNIT
$t_{(int)}$	External interrupt timing	Port P1, P2: P1.x to P2.x, external trigger signal for the interrupt flag, (see Note 1)	2.2 V/3 V	1.5			cycle
			2.2 V	62			ns
			3 V	50			
$t_{(cap)}$	Timer_A, Timer_B capture timing	TA0, TA1, TA2 TB0, TB1, TB2, TB3, TB4, TB5, TB6 (see Note 2)	2.2 V	62			ns
			3 V	50			
$f_{(TAext)}$	Timer_A, Timer_B clock frequency externally applied to pin	TACLK, TBCLK, INCLK: $t_{(H)} = t_{(L)}$	2.2 V			8	MHz
$f_{(TBext)}$			3 V			10	
$f_{(TAint)}$	Timer_A, Timer_B clock frequency	SMCLK or ACLK signal selected	2.2 V			8	MHz
$f_{(TBint)}$			3 V			10	

NOTES: 1. The external signal sets the interrupt flag every time the minimum $t_{(int)}$ cycle and time parameters are met. It may be set even with trigger signals shorter than $t_{(int)}$. Both the cycle and timing specifications must be met to ensure the flag is set. $t_{(int)}$ is measured in MCLK cycles.
2. Seven capture/compare registers in ’x14x(1) and three capture/compare registers in ’x13x.

leakage current (see Note 1)

PARAMETER			TEST CONDITIONS		MIN	TYP	MAX	UNIT
$I_{lkg(P1.x)}$	Leakage current (see Note 1)	Port P1	$V_{(P1.x)}$ (see Note 2)	V_{CC} = 2.2 V/3 V			±50	nA
$I_{lkg(P2.x)}$		Port P2	$V_{(P2.3)}$ $V_{(P2.4)}$ (see Note 2)				±50	
$I_{lkg(P6.x)}$		Port P6	$V_{(P6.x)}$ (see Note 2)				±50	

NOTES: 1. The leakage current is measured with V_{SS} or V_{CC} applied to the corresponding pin(s), unless otherwise noted.
2. The port pin must be selected as input and there must be no optional pullup or pulldown resistor.

electrical characteristics over recommended operating free-air temperature (unless otherwise noted) (continued)

outputs − Ports P1, P2, P3, P4, P5, and P6

PARAMETER		TEST CONDITIONS			MIN	TYP	MAX	UNIT
V_{OH}	High-level output voltage	$I_{OH(max)}$ = −1 mA,	V_{CC} = 2.2 V,	See Note 1	V_{CC}−0.25		V_{CC}	V
		$I_{OH(max)}$ = −6 mA,	V_{CC} = 2.2 V,	See Note 2	V_{CC}−0.6		V_{CC}	
		$I_{OH(max)}$ = −1 mA,	V_{CC} = 3 V,	See Note 1	V_{CC}−0.25		V_{CC}	
		$I_{OH(max)}$ = −6 mA,	V_{CC} = 3 V,	See Note 2	V_{CC}−0.6		V_{CC}	
V_{OL}	Low-level output voltage	$I_{OL(max)}$ = 1.5 mA,	V_{CC} = 2.2 V,	See Note 1	V_{SS}		V_{SS}+0.25	V
		$I_{OL(max)}$ = 6 mA,	V_{CC} = 2.2 V,	See Note 2	V_{SS}		V_{SS}+0.6	
		$I_{OL(max)}$ = 1.5 mA,	V_{CC} = 3 V,	See Note 1	V_{SS}		V_{SS}+0.25	
		$I_{OL(max)}$ = 6 mA,	V_{CC} = 3 V,	See Note 2	V_{SS}		V_{SS}+0.6	

NOTES: 1. The maximum total current, $I_{OH(max)}$ and $I_{OL(max)}$, for all outputs combined, should not exceed ±6 mA to satisfy the maximum specified voltage drop.
2. The maximum total current, $I_{OH(max)}$ and $I_{OL(max)}$, for all outputs combined, should not exceed ±24 mA to satisfy the maximum specified voltage drop.

output frequency

PARAMETER		TEST CONDITIONS		MIN	TYP	MAX	UNIT
f_{TAx}	TA0..2, TB0−TB6, Internal clock source, SMCLK signal applied (see Note 1)	C_L = 20 pF		DC		f_{System}	MHz
f_{ACLK}, f_{MCLK}, f_{SMCLK}	P5.6/ACLK, P5.4/MCLK, P5.5/SMCLK	C_L = 20 pF				f_{System}	
t_{Xdc}	Duty cycle of output frequency,	P2.0/ACLK C_L = 20 pF, V_{CC} = 2.2 V / 3 V	$f_{ACLK} = f_{LFXT1} = f_{XT1}$	40%		60%	
			$f_{ACLK} = f_{LFXT1} = f_{LF}$	30%		70%	
			$f_{ACLK} = f_{LFXT1/n}$		50%		
		P1.4/SMCLK, C_L = 20 pF, V_{CC} = 2.2 V / 3 V	$f_{SMCLK} = f_{LFXT1} = f_{XT1}$	40%		60%	
			$f_{SMCLK} = f_{LFXT1} = f_{LF}$	35%		65%	
			$f_{SMCLK} = f_{LFXT1/n}$	50%−15 ns	50%	50%−15 ns	
			$f_{SMCLK} = f_{DCOCLK}$	50%−15 ns	50%	50%−15 ns	

NOTE 1: The limits of the system clock MCLK has to be met; the system (MCLK) frequency should not exceed the limits. MCLK and SMCLK frequencies can be different.

electrical characteristics over recommended operating free-air temperature (unless otherwise noted) (continued)

outputs − Ports P1, P2, P3, P4, P5, and P6 (continued)

TYPICAL LOW-LEVEL OUTPUT CURRENT vs LOW-LEVEL OUTPUT VOLTAGE

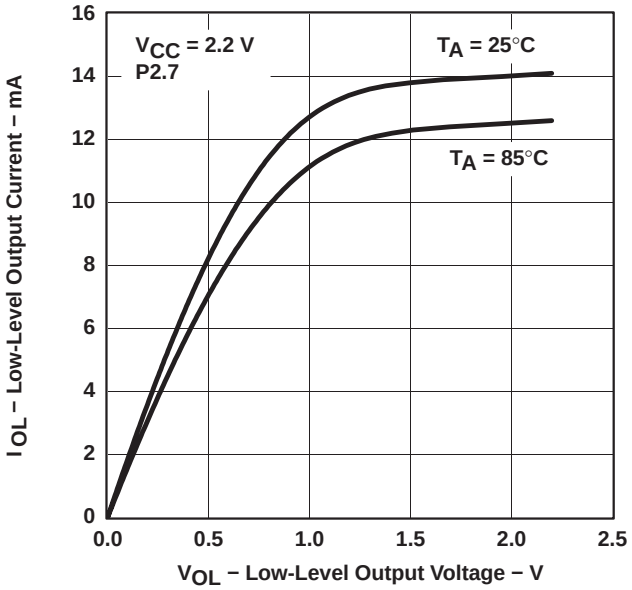

Figure 2

TYPICAL LOW-LEVEL OUTPUT CURRENT vs LOW-LEVEL OUTPUT VOLTAGE

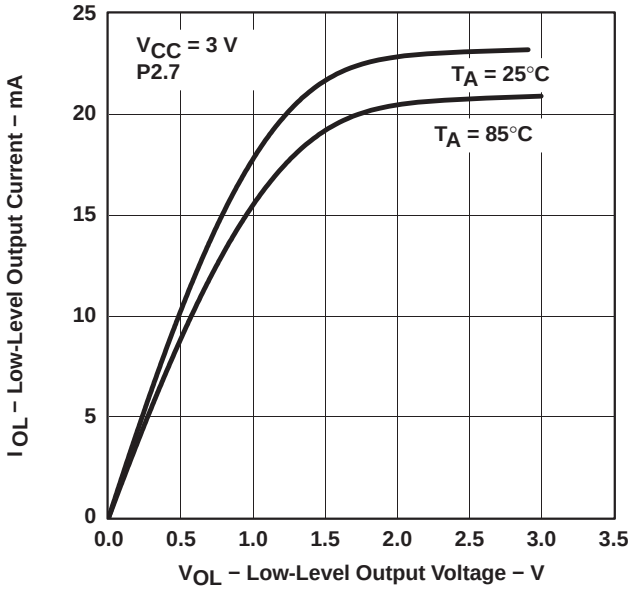

Figure 3

TYPICAL HIGH-LEVEL OUTPUT CURRENT vs HIGH-LEVEL OUTPUT VOLTAGE

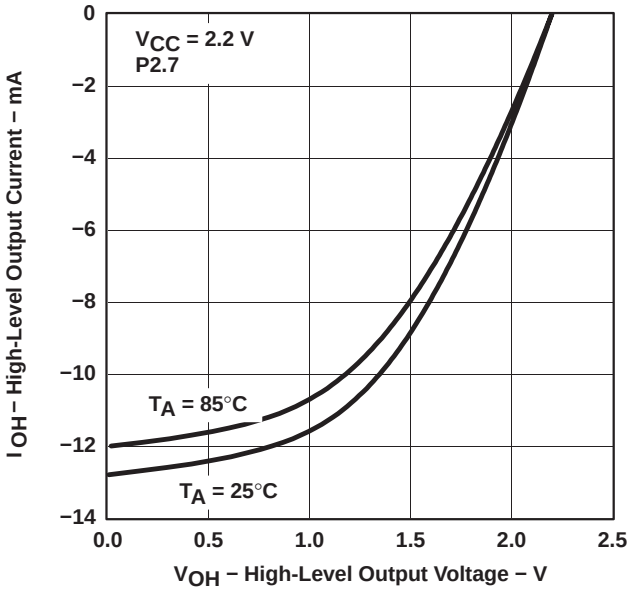

Figure 4

TYPICAL HIGH-LEVEL OUTPUT CURRENT vs HIGH-LEVEL OUTPUT VOLTAGE

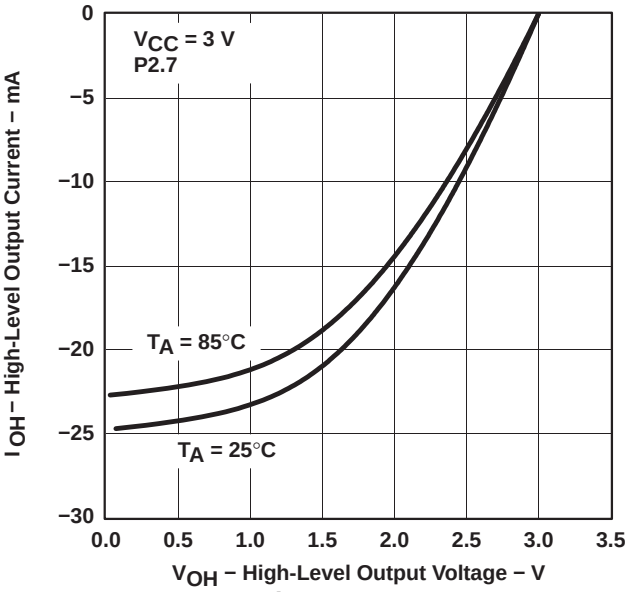

Figure 5

electrical characteristics over recommended operating free-air temperature (unless otherwise noted) (continued)

wake-up LPM3

PARAMETER		TEST CONDITIONS		MIN	TYP	MAX	UNIT
$t_{(LPM3)}$	Delay time	f = 1 MHz	V_{CC} = 2.2 V/3 V			6	µs
		f = 2 MHz				6	
		f = 3 MHz				6	

RAM

PARAMETER	TEST CONDITIONS	MIN	TYP	MAX	UNIT
VRAMh	CPU HALTED (see Note 1)	1.6			V

NOTE 1: This parameter defines the minimum supply voltage when the data in program memory RAM remain unchanged. No program execution should take place during this supply voltage condition.

Comparator_A (see Note 1)

PARAMETER		TEST CONDITIONS		MIN	TYP	MAX	UNIT
$I_{(DD)}$		CAON=1, CARSEL=0, CAREF=0	V_{CC} = 2.2 V		25	40	µA
			V_{CC} = 3 V		45	60	
$I_{(Refladder/Refdiode)}$		CAON=1, CARSEL=0, CAREF=1/2/3, no load at P2.3/CA0/TA1 and P2.4/CA1/TA2	V_{CC} = 2.2 V		30	50	µA
			V_{CC} = 3 V		45	71	
$V_{(IC)}$	Common-mode input voltage	CAON =1	V_{CC} = 2.2 V/3 V	0		V_{CC}−1	V
$V_{(Ref025)}$	$\frac{\text{Voltage @ 0.25 } V_{CC} \text{ node}}{V_{CC}}$	PCA0=1, CARSEL=1, CAREF=1, no load at P2.3/CA0/TA1 and P2.4/CA1/TA2	V_{CC} = 2.2 V/3 V	0.23	0.24	0.25	
$V_{(Ref050)}$	$\frac{\text{Voltage @ 0.5}V_{CC} \text{ node}}{V_{CC}}$	PCA0=1, CARSEL=1, CAREF=2, no load at P2.3/CA0/TA1 and P2.4/CA1/TA2	V_{CC} = 2.2 V/3 V	0.47	0.48	0.5	
$V_{(RefVT)}$	(see Figure 6)	PCA0=1, CARSEL=1, CAREF=3, no load at P2.3/CA0/TA1 and P2.4/CA1/TA2 T_A = 85°C	V_{CC} = 2.2 V	390	480	540	mV
			V_{CC} = 3 V	400	490	550	
$V_{(offset)}$	Offset voltage	See Note 2	V_{CC} = 2.2 V/3 V	−30		30	mV
V_{hys}	Input hysteresis	CAON=1	V_{CC} = 2.2 V/3 V	0	0.7	1.4	mV
$t_{(response\ LH)}$		T_A = 25°C, Overdrive 10 mV, Without filter: CAF=0	V_{CC} = 2.2 V	130	210	300	ns
			V_{CC} = 3 V	80	150	240	
		T_A = 25°C, Overdrive 10 mV, With filter: CAF=1	V_{CC} = 2.2 V	1.4	1.9	3.4	µs
			V_{CC} = 3 V	0.9	1.5	2.6	
$t_{(response\ HL)}$		T_A = 25°C, Overdrive 10 mV, Without filter: CAF=0	V_{CC} = 2.2 V	130	210	300	ns
			V_{CC} = 3 V	80	150	240	
		T_A = 25°C, Overdrive 10 mV, With filter: CAF=1	V_{CC} = 2.2 V	1.4	1.9	3.4	µs
			V_{CC} = 3 V	0.9	1.5	2.6	

NOTES: 1. The leakage current for the Comparator_A terminals is identical to $I_{lkg(Px.x)}$ specification.
2. The input offset voltage can be cancelled by using the CAEX bit to invert the Comparator_A inputs on successive measurements. The two successive measurements are then summed together.

electrical characteristics over recommended operating free-air temperature (unless otherwise noted) (continued)

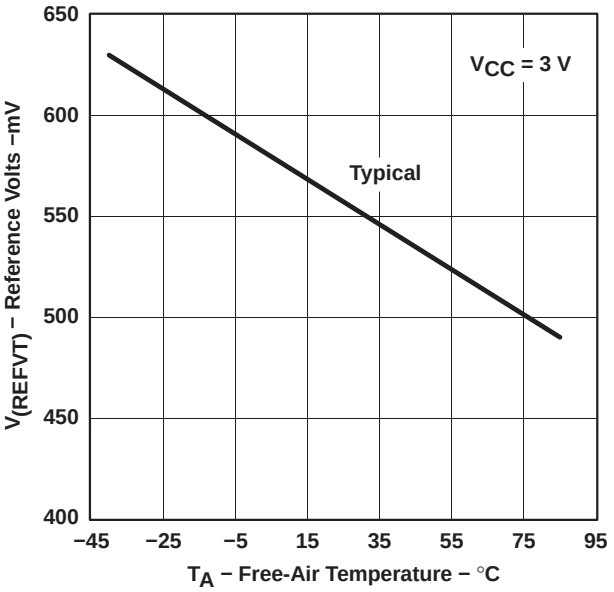

Figure 6. $V_{(RefVT)}$ vs Temperature, V_{CC} = 3 V

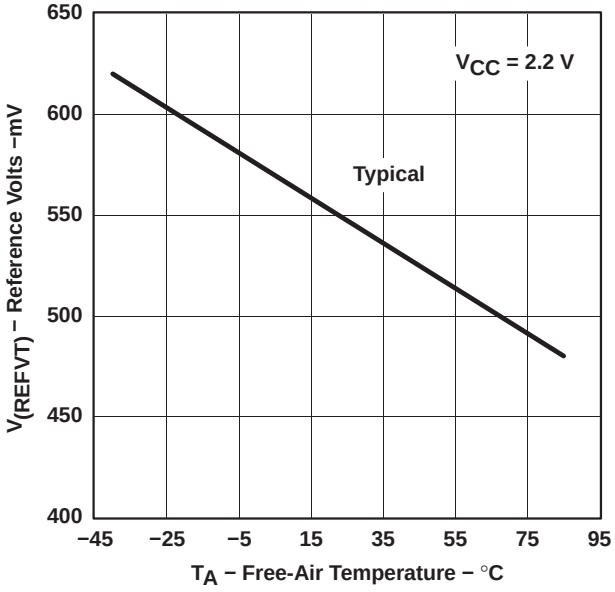

Figure 7. $V_{(RefVT)}$ vs Temperature, V_{CC} = 2.2 V

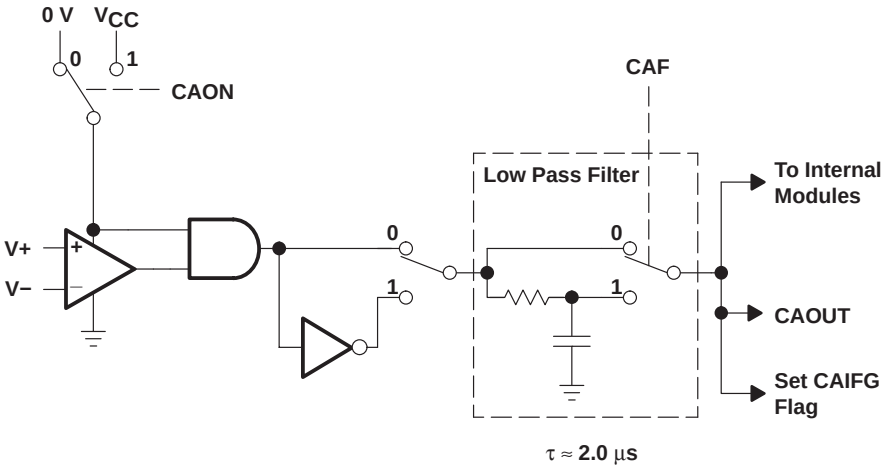

Figure 8. Block Diagram of Comparator_A Module

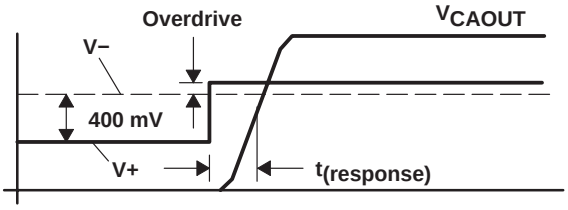

Figure 9. Overdrive Definition

electrical characteristics over recommended operating free-air temperature (unless otherwise noted) (continued)

PUC/POR

PARAMETER		TEST CONDITIONS		MIN	TYP	MAX	UNIT
$t_{(POR_Delay)}$	Internal time delay to release POR		V_{CC} = 2.2 V/3 V		150	250	µs
V_{POR}	V_{CC} threshold at which POR release delay time begins (see Note 1)	T_A = −40°C		1.4		1.8	V
		T_A = 25°C		1.1		1.5	V
		T_A = 85°C		0.8		1.2	V
$V_{(min)}$	V_{CC} threshold required to generate a POR (see Note 2)	V_{CC} |dV/dt| ≥ 1V/ms		0.2			V
$t_{(reset)}$	$\overline{RST}$/NMI low time for PUC/POR	Reset is accepted internally		2			µs

NOTES: 1. V_{CC} rise time dV/dt ≥ 1V/ms.
2. When driving V_{CC} low in order to generate a POR condition, V_{CC} should be driven to 200mV or lower with a dV/dt equal to or less than −1V/ms. The corresponding rising V_{CC} must also meet the dV/dt requirement equal to or greater than +1V/ms.

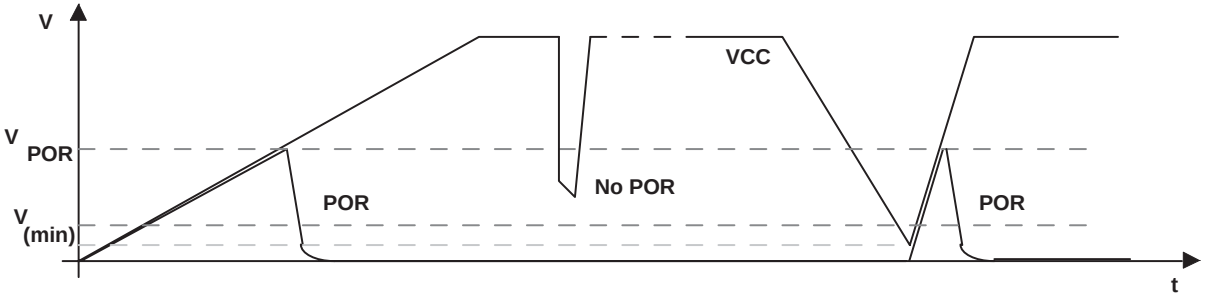

Figure 10. Power-On Reset (POR) vs Supply Voltage

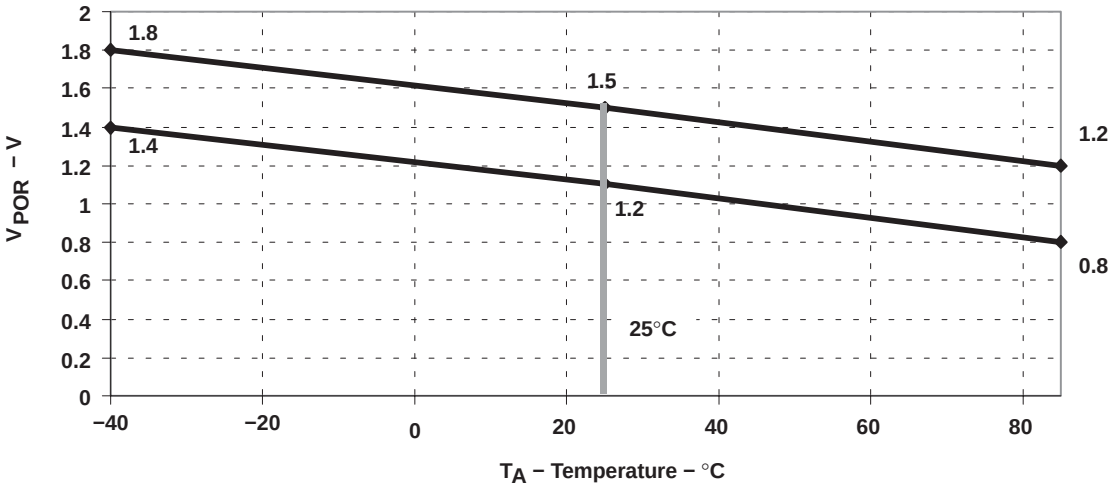

Figure 11. V_{POR} vs Temperature

electrical characteristics over recommended operating free-air temperature (unless otherwise noted) (continued)

DCO (see Note 1)

PARAMETER	TEST CONDITIONS		MIN	NOM	MAX	UNIT
$f_{(DCO03)}$	R_{sel} = 0, DCO = 3, MOD = 0, DCOR = 0, T_A = 25°C	V_{CC} = 2.2 V	0.08	0.12	0.15	MHz
		V_{CC} = 3 V	0.08	0.13	0.16	
$f_{(DCO13)}$	R_{sel} = 1, DCO = 3, MOD = 0, DCOR = 0, T_A = 25°C	V_{CC} = 2.2 V	0.14	0.19	0.23	MHz
		V_{CC} = 3 V	0.14	0.18	0.22	
$f_{(DCO23)}$	R_{sel} = 2, DCO = 3, MOD = 0, DCOR = 0, T_A = 25°C	V_{CC} = 2.2 V	0.22	0.30	0.36	MHz
		V_{CC} = 3 V	0.22	0.28	0.34	
$f_{(DCO33)}$	R_{sel} = 3, DCO = 3, MOD = 0, DCOR = 0, T_A = 25°C	V_{CC} = 2.2 V	0.37	0.49	0.59	MHz
		V_{CC} = 3 V	0.37	0.47	0.56	
$f_{(DCO43)}$	R_{sel} = 4, DCO = 3, MOD = 0, DCOR = 0, T_A = 25°C	V_{CC} = 2.2 V	0.61	0.77	0.93	MHz
		V_{CC} = 3 V	0.61	0.75	0.90	
$f_{(DCO53)}$	R_{sel} = 5, DCO = 3, MOD = 0, DCOR = 0, T_A = 25°C	V_{CC} = 2.2 V	1	1.2	1.5	MHz
		V_{CC} = 3 V	1	1.3	1.5	
$f_{(DCO63)}$	R_{sel} = 6, DCO = 3, MOD = 0, DCOR = 0, T_A = 25°C	V_{CC} = 2.2 V	1.6	1.9	2.2	MHz
		V_{CC} = 3 V	1.69	2.0	2.29	
$f_{(DCO73)}$	R_{sel} = 7, DCO = 3, MOD = 0, DCOR = 0, T_A = 25°C	V_{CC} = 2.2 V	2.4	2.9	3.4	MHz
		V_{CC} = 3 V	2.7	3.2	3.65	
$f_{(DCO47)}$	R_{sel} = 4, DCO = 7, MOD = 0, DCOR = 0, T_A = 25°C	V_{CC} = 2.2 V/3 V	f_{DCO40} × 1.7	f_{DCO40} × 2.1	f_{DCO40} × 2.5	MHz
$f_{(DCO77)}$	R_{sel} = 7, DCO = 7, MOD = 0, DCOR = 0, T_A = 25°C	V_{CC} = 2.2 V	4	4.5	4.9	MHz
		V_{CC} = 3 V	4.4	4.9	5.4	
$S_{(Rsel)}$	$S_R = f_{Rsel+1} / f_{Rsel}$	V_{CC} = 2.2 V/3 V	1.35	1.65	2	
$S_{(DCO)}$	$S_{DCO} = f_{DCO+1} / f_{DCO}$	V_{CC} = 2.2 V/3 V	1.07	1.12	1.16	
D_t	Temperature drift, R_{sel} = 4, DCO = 3, MOD = 0 (see Note 2)	V_{CC} = 2.2 V	−0.31	−0.36	−0.40	%/°C
		V_{CC} = 3 V	−0.33	−0.38	−0.43	
D_V	Drift with V_{CC} variation, R_{sel} = 4, DCO = 3, MOD = 0 (see Note 2)	V_{CC} = 2.2 V/3 V	0	5	10	%/V

NOTES: 1. The DCO frequency may not exceed the maximum system frequency defined by parameter processor frequency, $f_{(System)}$.
2. This parameter is not production tested.

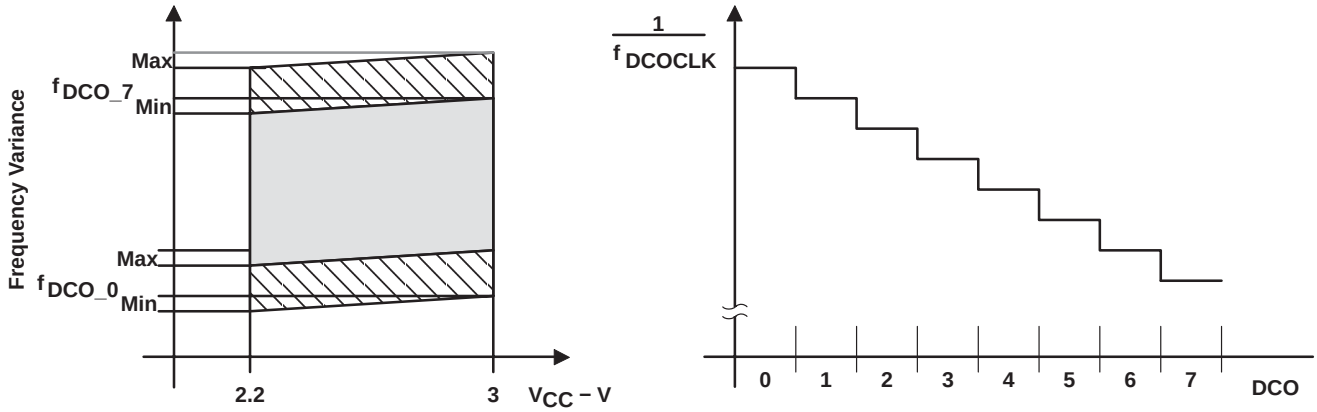

Figure 12. DCO Characteristics

electrical characteristics over recommended operating free-air temperature (unless otherwise noted) (continued)

main DCO characteristics

- Individual devices have a minimum and maximum operation frequency. The specified parameters for f_{DCOx0} to f_{DCOx7} are valid for all devices.
- All ranges selected by Rsel(n) overlap with Rsel(n+1): Rsel0 overlaps with Rsel1, ... Rsel6 overlaps with Rsel7.
- DCO control bits DCO0, DCO1, and DCO2 have a step size as defined by parameter S_{DCO}.
- Modulation control bits MOD0 to MOD4 select how often f_{DCO+1} is used within the period of 32 DCOCLK cycles. The frequency f(DCO) is used for the remaining cycles. The frequency is an average equal to $f(DCO) \times (2^{MOD/32})$.

DCO when using R_{OSC} (see Note 1)

PARAMETER	TEST CONDITIONS	V_{CC}	MIN	NOM	MAX	UNIT
f_{DCO}, DCO output frequency	R_{sel} = 4, DCO = 3, MOD = 0, DCOR = 1, T_A = 25°C	2.2 V		1.8±15%		MHz
		3 V		1.95±15%		MHz
D_t, Temperature drift	R_{sel} = 4, DCO = 3, MOD = 0, DCOR = 1	2.2 V/3 V		±0.1		%/°C
D_v, Drift with V_{CC} variation	R_{sel} = 4, DCO = 3, MOD = 0, DCOR = 1	2.2 V/3 V		10		%/V

NOTES: 1. R_{OSC} = 100kΩ. Metal film resistor, type 0257. 0.6 watt with 1% tolerance and T_K = ±50ppm/°C.

crystal oscillator, LFXT1 oscillator (see Note 1)

PARAMETER		TEST CONDITIONS	MIN	NOM	MAX	UNIT
C_{XIN}	Integrated input capacitance	XTS=0; LF oscillator selected V_{CC} = 2.2 V/3 V		12		pF
		XTS=1; XT1 oscillator selected V_{CC} = 2.2 V/3 V		2		
C_{XOUT}	Integrated output capacitance	XTS=0; LF oscillator selected V_{CC} = 2.2 V/3 V		12		pF
		XTS=1; XT1 oscillator selected V_{CC} = 2.2 V/3 V		2		
V_{IL}	Input levels at XIN	V_{CC} = 2.2 V/3 V (see Note 2)	V_{SS}		$0.2 \times V_{CC}$	V
V_{IH}			$0.8 \times V_{CC}$		V_{CC}	V

NOTES: 1. The oscillator needs capacitors at both terminals, with values specified by the crystal manufacturer.
2. Applies only when using an external logic-level clock source. Not applicable when using a crystal or resonator.

crystal oscillator, XT2 oscillator (see Note 1)

PARAMETER		TEST CONDITIONS	MIN	NOM	MAX	UNIT
C_{XT2IN}	Input capacitance	V_{CC} = 2.2 V/3 V		2		pF
C_{XT2OUT}	Output capacitance	V_{CC} = 2.2 V/3 V		2		pF
V_{IL}	Input levels at XT2IN	V_{CC} = 2.2 V/3 V (see Note 2)	V_{SS}		$0.2 \times V_{CC}$	V
V_{IH}			$0.8 \times V_{CC}$		V_{CC}	V

NOTES: 1. The oscillator needs capacitors at both terminals, with values specified by the crystal manufacturer.
2. Applies only when using an external logic-level clock source. Not applicable when using a crystal or resonator.

USART0, USART1 (see Note 1)

PARAMETER		TEST CONDITIONS	MIN	NOM	MAX	UNIT
$t_{(\tau)}$	USART0/1: deglitch time	V_{CC} = 2.2 V	200	430	800	ns
		V_{CC} = 3 V	150	280	500	

NOTE 1: The signal applied to the USART0/1 receive signal/terminal (URXD0/1) should meet the timing requirements of $t_{(\tau)}$ to ensure that the URXS flip-flop is set. The URXS flip-flop is set with negative pulses meeting the minimum-timing condition of $t_{(\tau)}$. The operating conditions to set the flag must be met independently from this timing constraint. The deglitch circuitry is active only on negative transitions on the URXD0/1 line.

electrical characteristics over recommended operating free-air temperature (unless otherwise noted) (continued)

12-bit ADC, power supply and input range conditions (see Note 1)

PARAMETER		TEST CONDITIONS		MIN	NOM	MAX	UNIT
AV_{CC}	Analog supply voltage	AV_{CC} and DV_{CC} are connected together AV_{SS} and DV_{SS} are connected together $V_{(AVSS)} = V_{(DVSS)} = 0$ V		2.2		3.6	V
$V_{(P6.x/Ax)}$	Analog input voltage range (see Note 2)	All P6.0/A0 to P6.7/A7 terminals. Analog inputs selected in ADC12MCTLx register and P6Sel.x=1 $0 \le x \le 7$; $V_{(AVSS)} \le V_{P6.x/Ax} \le V_{(AVCC)}$		0		V_{AVCC}	V
I_{ADC12}	Operating supply current into AV_{CC} terminal (see Note 3)	$f_{ADC12CLK}$ = 5.0 MHz ADC12ON = 1, REFON = 0 SHT0=0, SHT1=0, ADC12DIV=0	2.2 V		0.65	1.3	mA
			3 V		0.8	1.6	
I_{REF+}	Operating supply current into AV_{CC} terminal (see Note 4)	$f_{ADC12CLK}$ = 5.0 MHz ADC12ON = 0, REFON = 1, REF2_5V = 1	3 V		0.5	0.8	mA
		$f_{ADC12CLK}$ = 5.0 MHz ADC12ON = 0, REFON = 1, REF2_5V = 0	2.2 V		0.5	0.8	mA
			3 V		0.5	0.8	
C_I †	Input capacitance	Only one terminal can be selected at one time, P6.x/Ax	2.2 V			40	pF
R_I†	Input MUX ON resistance	$0V \le V_{Ax} \le V_{AVCC}$	3 V			2000	Ω

† Not production tested, limits verified by design

NOTES:
1. The leakage current is defined in the leakage current table with P6.x/Ax parameter.
2. The analog input voltage range must be within the selected reference voltage range V_{R+} to V_{R-} for valid conversion results.
3. The internal reference supply current is not included in current consumption parameter I_{ADC12}.
4. The internal reference current is supplied via terminal AV_{CC}. Consumption is independent of the ADC12ON control bit, unless a conversion is active. The REFON bit enables to settle the built-in reference before starting an A/D conversion.

12-bit ADC, external reference (see Note 1)

PARAMETER		TEST CONDITIONS		MIN	NOM	MAX	UNIT
V_{eREF+}	Positive external reference voltage input	$V_{eREF+} > V_{REF-}/V_{eREF-}$ (see Note 2)		1.4		V_{AVCC}	V
V_{REF-}/V_{eREF-}	Negative external reference voltage input	$V_{eREF+} > V_{REF-}/V_{eREF-}$ (see Note 3)		0		1.2	V
$(V_{eREF+} - V_{REF-}/V_{eREF-})$	Differential external reference voltage input	$V_{eREF+} > V_{REF-}/V_{eREF-}$ (see Note 4)		1.4		V_{AVCC}	V
I_{VeREF+}	Static input current	$0V \le V_{eREF+} \le V_{AVCC}$	2.2 V/3 V			±1	µA
$I_{VREF-/VeREF-}$	Static input current	$0V \le V_{eREF-} \le V_{AVCC}$	2.2 V/3 V			±1	µA

NOTES:
1. The external reference is used during conversion to charge and discharge the capacitance array. The input capacitance, C_i, is also the dynamic load for an external reference during conversion. The dynamic impedance of the reference supply should follow the recommendations on analog-source impedance to allow the charge to settle for 12-bit accuracy.
2. The accuracy limits the minimum positive external reference voltage. Lower reference voltage levels may be applied with reduced accuracy requirements.
3. The accuracy limits the maximum negative external reference voltage. Higher reference voltage levels may be applied with reduced accuracy requirements.
4. The accuracy limits minimum external differential reference voltage. Lower differential reference voltage levels may be applied with reduced accuracy requirements.

electrical characteristics over recommended operating free-air temperature (unless otherwise noted) (continued)

12-bit ADC, built-in reference

PARAMETER		TEST CONDITIONS		MIN	NOM	MAX	UNIT
V_{REF+}	Positive built-in reference voltage output	REF2_5V = 1 for 2.5 V $I_{VREF+} \leq I_{VREF+}max$	3 V	2.4	2.5	2.6	V
		REF2_5V = 0 for 1.5 V $I_{VREF+} \leq I_{VREF+}max$	2.2 V/3 V	1.44	1.5	1.56	
$AV_{CC(min)}$	AV_{CC} minimum voltage, Positive built-in reference active	REF2_5V = 0, $I_{VREF+} \leq 1mA$		2.2			V
		REF2_5V = 1, $I_{VREF+} \leq 0.5mA$		$V_{REF+} + 0.15$			
		REF2_5V = 1, $I_{VREF+} \leq 1mA$		$V_{REF+} + 0.15$			
I_{VREF+}	Load current out of V_{REF+} terminal		2.2 V	0.01		−0.5	mA
			3 V			−1	
$I_{L(VREF)+}$ †	Load-current regulation V_{REF+} terminal	I_{VREF+} = 500 µA +/− 100 µA Analog input voltage ~0.75 V; REF2_5V = 0	2.2 V			±2	LSB
			3 V			±2	
		I_{VREF+} = 500 µA ± 100 µA Analog input voltage ~1.25 V; REF2_5V = 1	3 V			±2	LSB
$I_{DL(VREF)+}$ ‡	Load current regulation V_{REF+} terminal	I_{VREF+} =100 µA → 900 µA, C_{VREF+}=5 µF, ax ~0.5 x V_{REF+} Error of conversion result ≤ 1 LSB	3 V			20	ns
C_{VREF+}	Capacitance at pin V_{REF+} (see Note 1)	REFON =1, 0 mA ≤ $I_{VREF+} \leq I_{VREF+}max$	2.2 V/3 V	5	10		µF
T_{REF+} †	Temperature coefficient of built-in reference	I_{VREF+} is a constant in the range of 0 mA ≤ I_{VREF+} ≤ 1 mA	2.2 V/3 V			±100	ppm/°C
t_{REFON} †	Settle time of internal reference voltage (see Figure 13 and Note 2)	I_{VREF+} = 0.5 mA, C_{VREF+} = 10 µF, V_{REF+} = 1.5 V, V_{AVCC} = 2.2 V				17	ms

† Not production tested, limits characterized
‡ Not production tested, limits verified by design

NOTES: 1. The internal buffer operational amplifier and the accuracy specifications require an external capacitor. All INL and DNL tests uses two capacitors between pins V_{REF+} and AV_{SS} and V_{REF-}/V_{eREF-} and AV_{SS}: 10 µF tantalum and 100 nF ceramic.

NOTES: 2. The condition is that the error in a conversion started after t_{REFON} is less than ±0.5 LSB. The settling time depends on the external capacitive load.

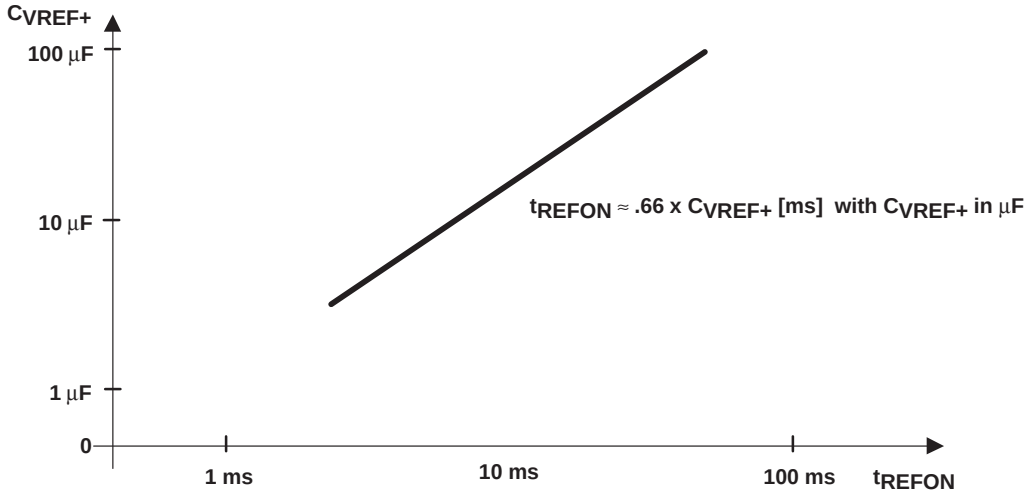

Figure 13. Typical Settling Time of Internal Reference t_{REFON} vs External Capacitor on V_{REF}+

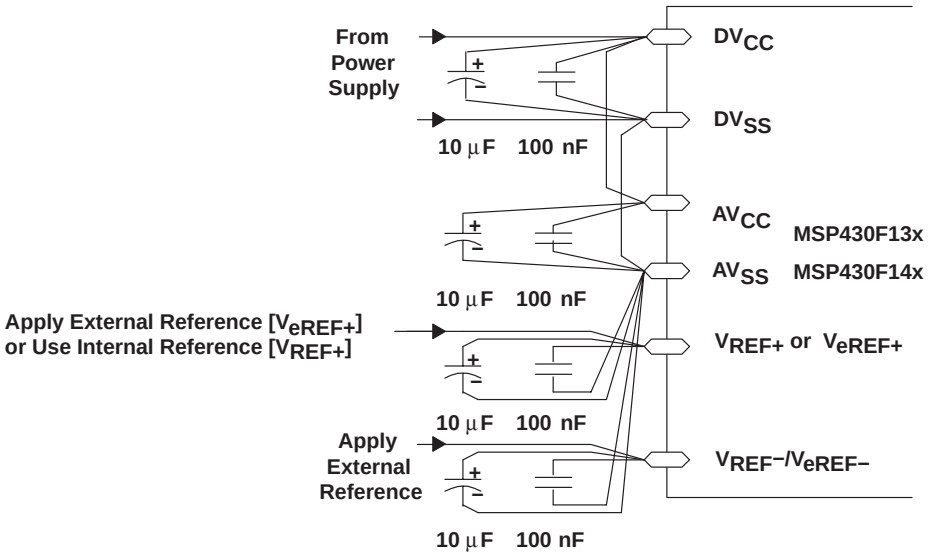

Figure 14. Supply Voltage and Reference Voltage Design V_{REF-}/V_{eREF-} External Supply

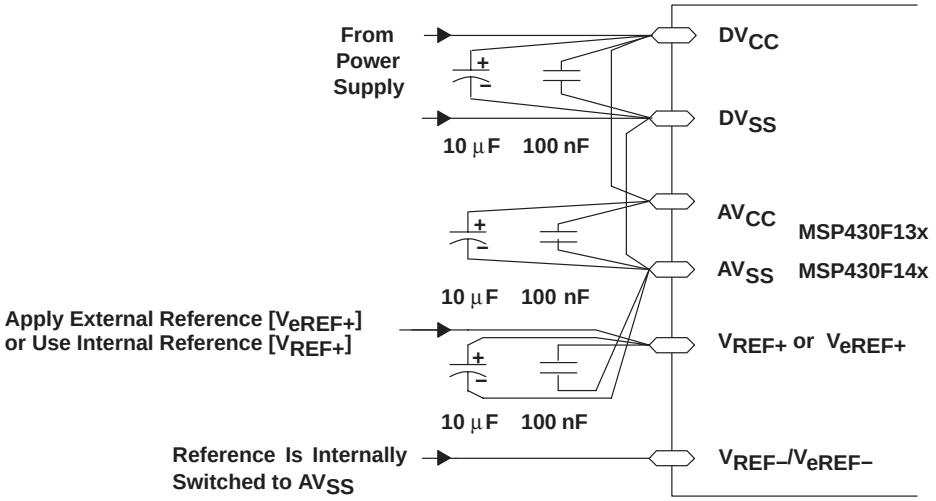

Figure 15. Supply Voltage and Reference Voltage Design V_{REF-}/V_{eREF-} = AV_{SS}, Internally Connected

electrical characteristics over recommended operating free-air temperature (unless otherwise noted) (continued)

12-bit ADC, timing parameters

PARAMETER		TEST CONDITIONS		MIN	NOM	MAX	UNIT
$f_{ADC12CLK}$		For specified performance of ADC12 linearity parameters	2.2V/ 3V	0.45	5	6.3	MHz
$f_{ADC12OSC}$	Internal ADC12 oscillator	ADC12DIV=0, $f_{ADC12CLK}=f_{ADC12OSC}$	2.2 V/ 3V	3.7		6.3	MHz
$t_{CONVERT}$	Conversion time	$C_{VREF+} \geq 5$ µF, Internal oscillator, $f_{ADC12OSC}$ = 3.7 MHz to 6.3 MHz	2.2 V/ 3 V	2.06		3.51	µs
		External $f_{ADC12CLK}$ from ACLK, MCLK or SMCLK: ADC12SSEL ≠ 0			13×ADC12DIV× $1/f_{ADC12CLK}$		µs
$t_{ADC12ON}$‡	Turn on settling time of the ADC	(see Note 1)				100	ns
t_{Sample}‡	Sampling time	R_S = 400 Ω, R_I = 1000 Ω, C_I = 30 pF $\tau = [R_S + R_I] \times C_I$;(see Note 2)	3 V	1220			ns
			2.2 V	1400			

† Not production tested, limits characterized
‡ Not production tested, limits verified by design

NOTES: 1. The condition is that the error in a conversion started after $t_{ADC12ON}$ is less than ±0.5 LSB. The reference and input signal are already settled.
2. Approximately ten Tau (τ) are needed to get an error of less than ±0.5 LSB:
$t_{Sample} = \ln(2^{n+1}) \times (R_S + R_I) \times C_I + 800$ ns where n = ADC resolution = 12, R_S = external source resistance.

12-bit ADC, linearity parameters

PARAMETER		TEST CONDITIONS		MIN	NOM	MAX	UNIT
E_I	Integral linearity error	1.4 V ≤ ($V_{eREF+} - V_{REF-}/V_{eREF-}$) min ≤ 1.6 V	2.2 V/3 V			±2	LSB
		1.6 V < ($V_{eREF+} - V_{REF-}/V_{eREF-}$) min ≤ [$V_{(AVCC)}$]				±1.7	
E_D	Differential linearity error	($V_{eREF+} - V_{REF-}/V_{eREF-}$)min ≤ ($V_{eREF+} - V_{REF-}/V_{eREF-}$), C_{VREF+} = 10 µF (tantalum) and 100 nF (ceramic)	2.2 V/3 V			±1	LSB
E_O	Offset error	($V_{eREF+} - V_{REF-}/V_{eREF-}$)min ≤ ($V_{eREF+} - V_{REF-}/V_{eREF-}$), Internal impedance of source R_S < 100 Ω, C_{VREF+} = 10 µF (tantalum) and 100 nF (ceramic)	2.2 V/3 V		±2	±4	LSB
E_G	Gain error	($V_{eREF+} - V_{REF-}/V_{eREF-}$)min ≤ ($V_{eREF+} - V_{REF-}/V_{eREF-}$), C_{VREF+} = 10 µF (tantalum) and 100 nF (ceramic)	2.2 V/3 V		±1.1	±2	LSB
E_T	Total unadjusted error	($V_{eREF+} - V_{REF-}/V_{eREF-}$)min ≤ ($V_{eREF+} - V_{REF-}/V_{eREF-}$), C_{VREF+} = 10 µF (tantalum) and 100 nF (ceramic)	2.2 V/3 V		±2	±5	LSB

electrical characteristics over recommended operating free-air temperature (unless otherwise noted) (continued)

12-bit ADC, temperature sensor and built-in V_{MID}

PARAMETER		TEST CONDITIONS		MIN	NOM	MAX	UNIT
I_{SENSOR}	Operating supply current into AV_{CC} terminal (see Note 1)	REFON = 0, INCH = 0Ah, ADC12ON=NA, T_A = 25°C	2.2 V		40	120	µA
			3 V		60	160	
V_{SENSOR}†		ADC12ON = 1, INCH = 0Ah, T_A = 0°C	2.2 V		986	986±5%	mV
			3 V		986	986±5%	
TC_{SENSOR}†		ADC12ON = 1, INCH = 0Ah	2.2 V		3.55	3.55±3%	mV/°C
			3 V		3.55	3.55±3%	
$t_{SENSOR(sample)}$†	Sample time required if channel 10 is selected (see Note 2)	ADC12ON = 1, INCH = 0Ah, Error of conversion result ≤ 1 LSB	2.2 V	30			µs
			3 V	30			
I_{VMID}	Current into divider at channel 11 (see Note 3)	ADC12ON = 1, INCH = 0Bh	2.2 V			NA	µA
			3 V			NA	
V_{MID}	AV_{CC} divider at channel 11	ADC12ON = 1, INCH = 0Bh, V_{MID} is ~0.5 x V_{AVCC}	2.2 V		1.1	1.1±0.04	V
			3 V		1.5	1.50±0.04	
$t_{VMID(sample)}$	Sample time required if channel 11 is selected (see Note 4)	ADC12ON = 1, INCH = 0Bh, Error of conversion result ≤ 1 LSB	2.2 V	1400			ns
			3 V	1220			

† Not production tested, limits characterized

NOTES:
1. The sensor current I_{SENSOR} is consumed if (ADC12ON = 1 and REFON=1), or (ADC12ON=1 AND INCH=0Ah and sample signal is high). Therefore it includes the constant current through the sensor and the reference.
2. The typical equivalent impedance of the sensor is 51 kΩ. The sample time required includes the sensor-on time $t_{SENSOR(on)}$.
3. No additional current is needed. The V_{MID} is used during sampling.
4. The on-time $t_{VMID(on)}$ is included in the sampling time $t_{VMID(sample)}$; no additional on time is needed.

electrical characteristics over recommended operating free-air temperature (unless otherwise noted) (continued)

Flash Memory

PARAMETER		TEST CONDITIONS	V_{CC}	MIN	NOM	MAX	UNIT
$V_{CC(PGM/ERASE)}$	Program and Erase supply voltage			2.7		3.6	V
f_{FTG}	Flash Timing Generator frequency			257		476	kHz
I_{PGM}	Supply current from DV_{CC} during program		2.7 V/ 3.6 V		3	5	mA
I_{ERASE}	Supply current from DV_{CC} during erase		2.7 V/ 3.6 V		3	7	mA
t_{CPT}	Cumulative program time	see Note 1	2.7 V/ 3.6 V			4	ms
$t_{CMErase}$	Cumulative mass erase time	see Note 2	2.7 V/ 3.6 V	200			ms
	Program/Erase endurance			10^4	10^5		cycles
$t_{Retention}$	Data retention duration	T_J = 25°C		100			years
t_{Word}	Word or byte program time	see Note 3			35		t_{FTG}
$t_{Block, 0}$	Block program time for 1st byte or word				30		
$t_{Block, 1-63}$	Block program time for each additional byte or word				21		
$t_{Block, End}$	Block program end-sequence wait time				6		
$t_{Mass Erase}$	Mass erase time				5297		
$t_{Seg Erase}$	Segment erase time				4819		

NOTES: 1. The cumulative program time must not be exceeded when writing to a 64-byte flash block. This parameter applies to all programming methods: individual word/byte write and block write modes.
2. The mass erase duration generated by the flash timing generator is at least 11.1ms (= 5297x1/f_{FTG},max = 5297x1/476kHz). To achieve the required cumulative mass erase time the Flash Controller's mass erase operation can be repeated until this time is met. (A worst case minimum of 19 cycles are required).
3. These values are hardwired into the Flash Controller's state machine (t_{FTG} = 1/f_{FTG}).

JTAG Interface

PARAMETER		TEST CONDITIONS	V_{CC}	MIN	NOM	MAX	UNIT
f_{TCK}	TCK input frequency	see Note 1	2.2 V	0		5	MHz
			3 V	0		10	MHz
$R_{Internal}$	Internal pull-up resistance on TMS, TCK, TDI/TCLK	see Note 2	2.2 V/ 3 V	25	60	90	kΩ

NOTES: 1. f_{TCK} may be restricted to meet the timing requirements of the module selected.
2. TMS, TDI/TCLK, and TCK pull-up resistors are implemented in all versions.

JTAG Fuse (see Note 1)

PARAMETER		TEST CONDITIONS	V_{CC}	MIN	NOM	MAX	UNIT
$V_{CC(FB)}$	Supply voltage during fuse-blow condition	T_A = 25°C		2.5			V
V_{FB}	Voltage level on TDI/TCLK for fuse-blow: F versions			6		7	V
I_{FB}	Supply current into TDI/TCLK during fuse blow					100	mA
t_{FB}	Time to blow fuse					1	ms

NOTES: 1. Once the fuse is blown, no further access to the MSP430 JTAG/Test and emulation features is possible. The JTAG block is switched to bypass mode.

APPLICATION INFORMATION

input/output schematic

port P1, P1.0 to P1.7, input/output with Schmitt-trigger

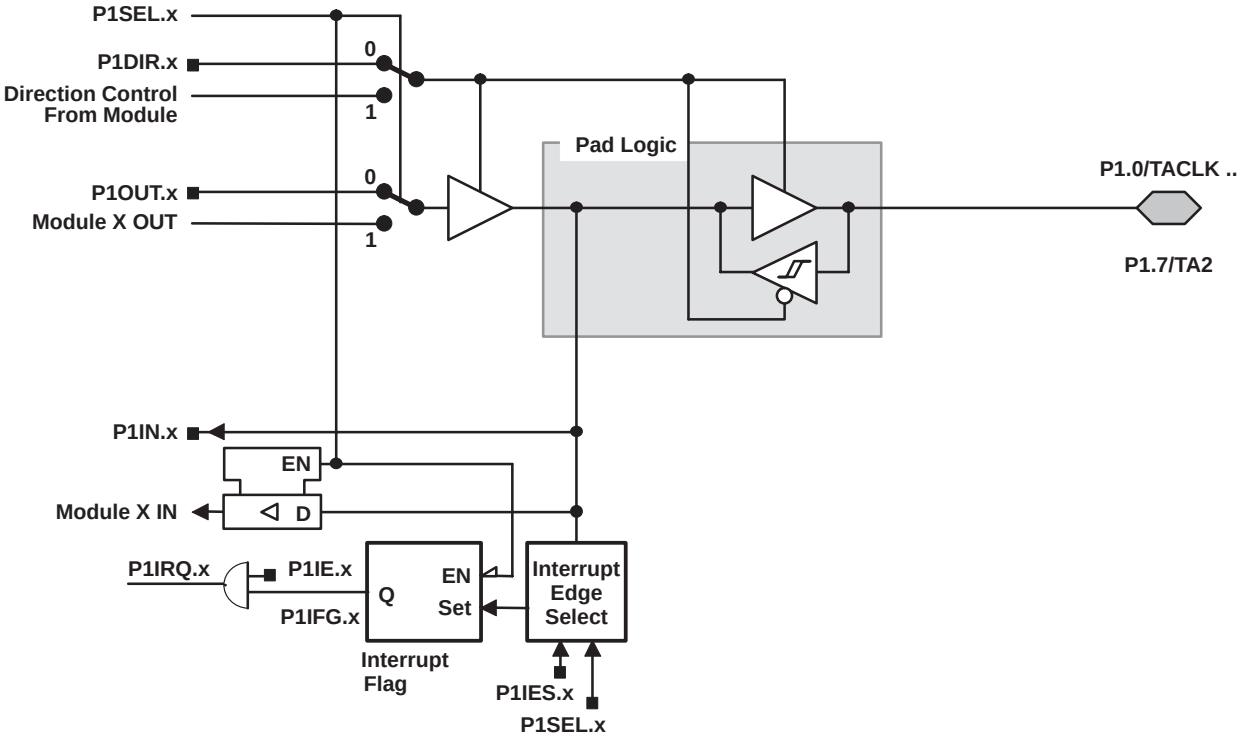

PnSel.x	PnDIR.x	Dir. CONTROL FROM MODULE	PnOUT.x	MODULE X OUT	PnIN.x	MODULE X IN	PnIE.x	PnIFG.x	PnIES.x
P1Sel.0	P1DIR.0	P1DIR.0	P1OUT.0	DV_{SS}	P1IN.0	TACLK†	P1IE.0	P1IFG.0	P1IES.0
P1Sel.1	P1DIR.1	P1DIR.1	P1OUT.1	Out0 signal†	P1IN.1	CCI0A†	P1IE.1	P1IFG.1	P1IES.1
P1Sel.2	P1DIR.2	P1DIR.2	P1OUT.2	Out1 signal†	P1IN.2	CCI1A†	P1IE.2	P1IFG.2	P1IES.2
P1Sel.3	P1DIR.3	P1DIR.3	P1OUT.3	Out2 signal†	P1IN.3	CCI2A†	P1IE.3	P1IFG.3	P1IES.3
P1Sel.4	P1DIR.4	P1DIR.4	P1OUT.4	SMCLK	P1IN.4	unused	P1IE.4	P1IFG.4	P1IES.4
P1Sel.5	P1DIR.5	P1DIR.5	P1OUT.5	Out0 signal†	P1IN.5	unused	P1IE.5	P1IFG.5	P1IES.5
P1Sel.6	P1DIR.6	P1DIR.6	P1OUT.6	Out1 signal†	P1IN.6	unused	P1IE.6	P1IFG.6	P1IES.6
P1Sel.7	P1DIR.7	P1DIR.7	P1OUT.7	Out2 signal†	P1IN.7	unused	P1IE.7	P1IFG.7	P1IES.7

† Signal from or to Timer_A

APPLICATION INFORMATION

input/output schematic (continued)

port P2, P2.0 to P2.2, P2.6, and P2.7 input/output with Schmitt-trigger

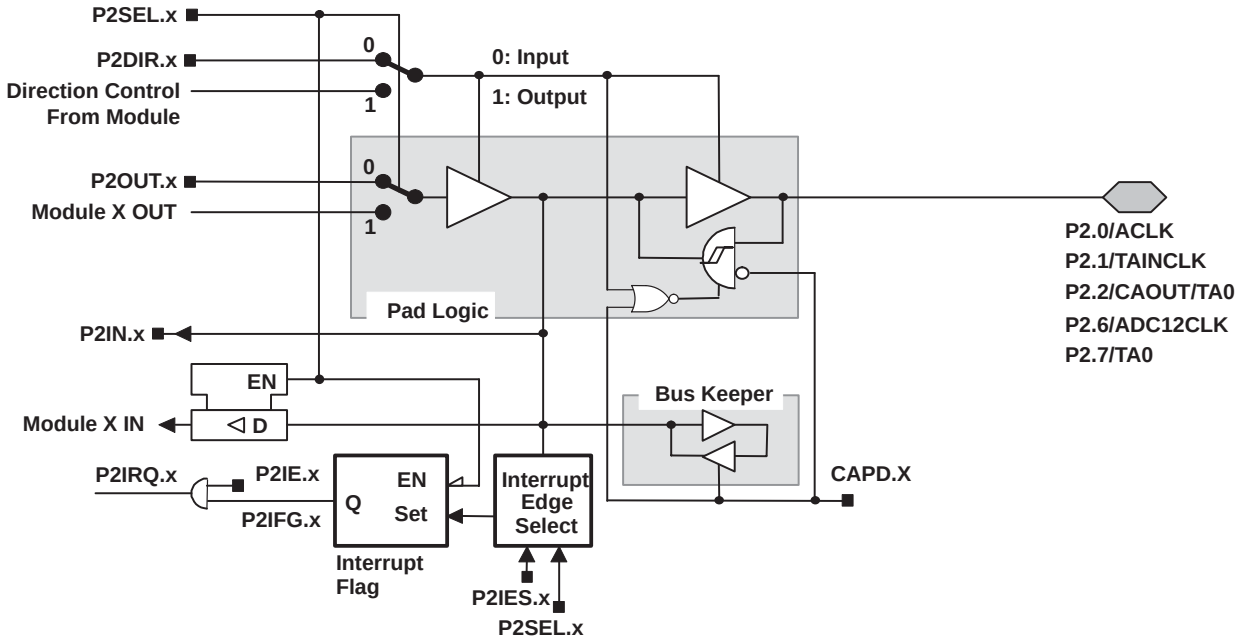

x: Bit Identifier 0 to 2, 6, and 7 for Port P2

PnSel.x	PnDIR.x	Dir. CONTROL FROM MODULE	PnOUT.x	MODULE X OUT	PnIN.x	MODULE X IN	PnIE.x	PnIFG.x	PnIES.x
P2Sel.0	P2DIR.0	P2DIR.0	P2OUT.0	ACLK	P2IN.0	unused	P2IE.0	P2IFG.0	P2IES.0
P2Sel.1	P2DIR.1	P2DIR.1	P2OUT.1	DV_{SS}	P2IN.1	INCLK‡	P2IE.1	P2IFG.1	P2IES.1
P2Sel.2	P2DIR.2	P2DIR.2	P2OUT.2	CAOUT†	P2IN.2	CCI0B‡	P2IE.2	P2IFG.2	P2IES.2
P2Sel.6	P2DIR.6	P2DIR.6	P2OUT.6	ADC12CLK¶	P2IN.6	unused	P2IE.6	P2IFG.6	P2IES.6
P2Sel.7	P2DIR.7	P2DIR.7	P2OUT.7	Out0 signal§	P2IN.7	unused	P2IE.7	P2IFG.7	P2IES.7

† Signal from Comparator_A
‡ Signal to Timer_A
§ Signal from Timer_A
¶ ADC12CLK signal is output of the 12-bit ADC module

APPLICATION INFORMATION

input/output schematic (continued)

port P2, P2.3 to P2.4, input/output with Schmitt-trigger

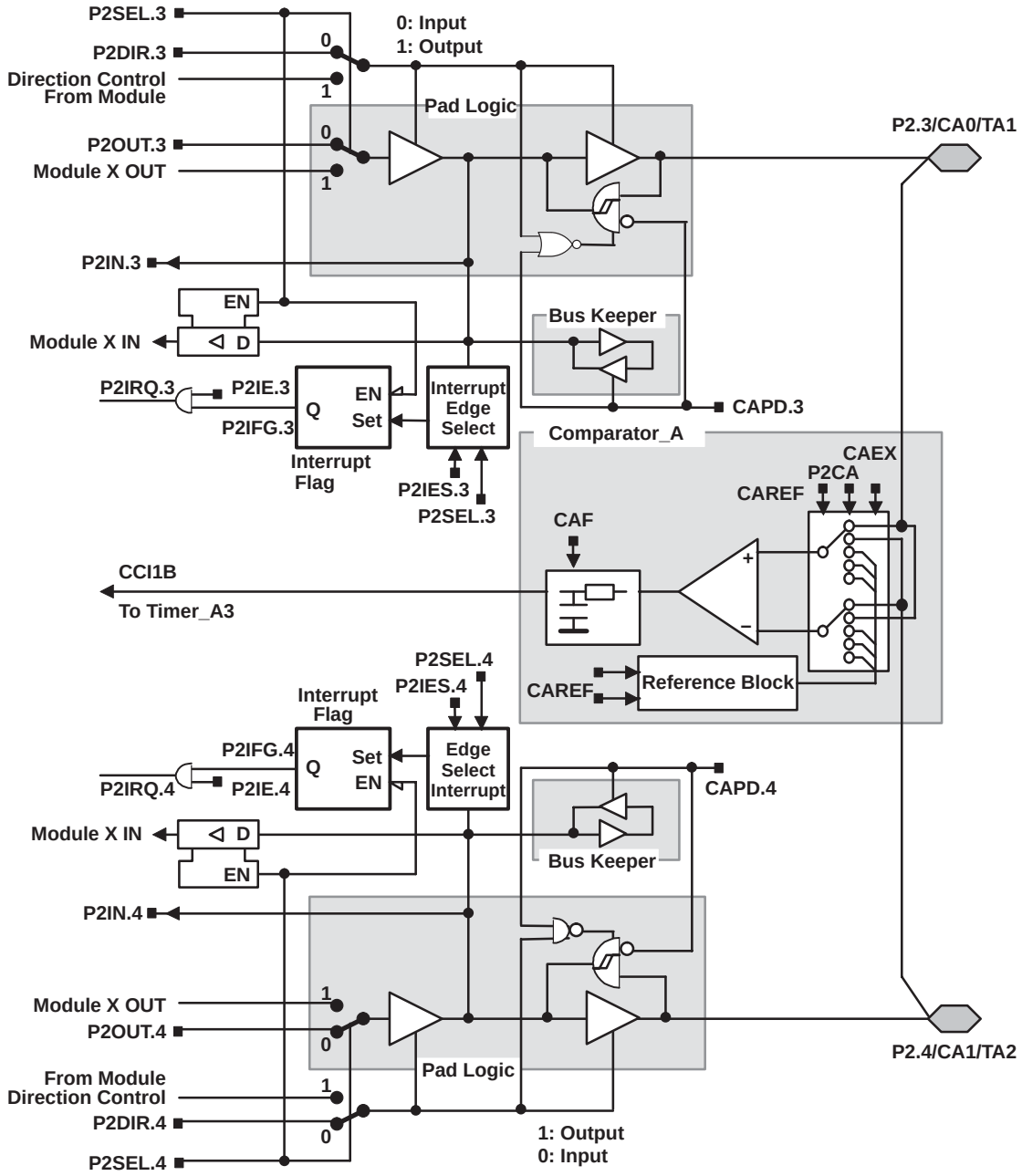

PnSel.x	PnDIR.x	DIRECTION CONTROL FROM MODULE	PnOUT.x	MODULE X OUT	PnIN.x	MODULE X IN	PnIE.x	PnIFG.x	PnIES.x
P2Sel.3	P2DIR.3	P2DIR.3	P2OUT.3	Out1 signal†	P2IN.3	unused	P2IE.3	P2IFG.3	P2IES.3
P2Sel.4	P2DIR.4	P2DIR.4	P2OUT.4	Out2 signal†	P2IN.4	unused	P2IE.4	P2IFG.4	P2IES.4

† Signal from Timer_A

APPLICATION INFORMATION

input/output schematic (continued)

port P2, P2.5, input/output with Schmitt-trigger and R_{OSC} function for the basic clock module

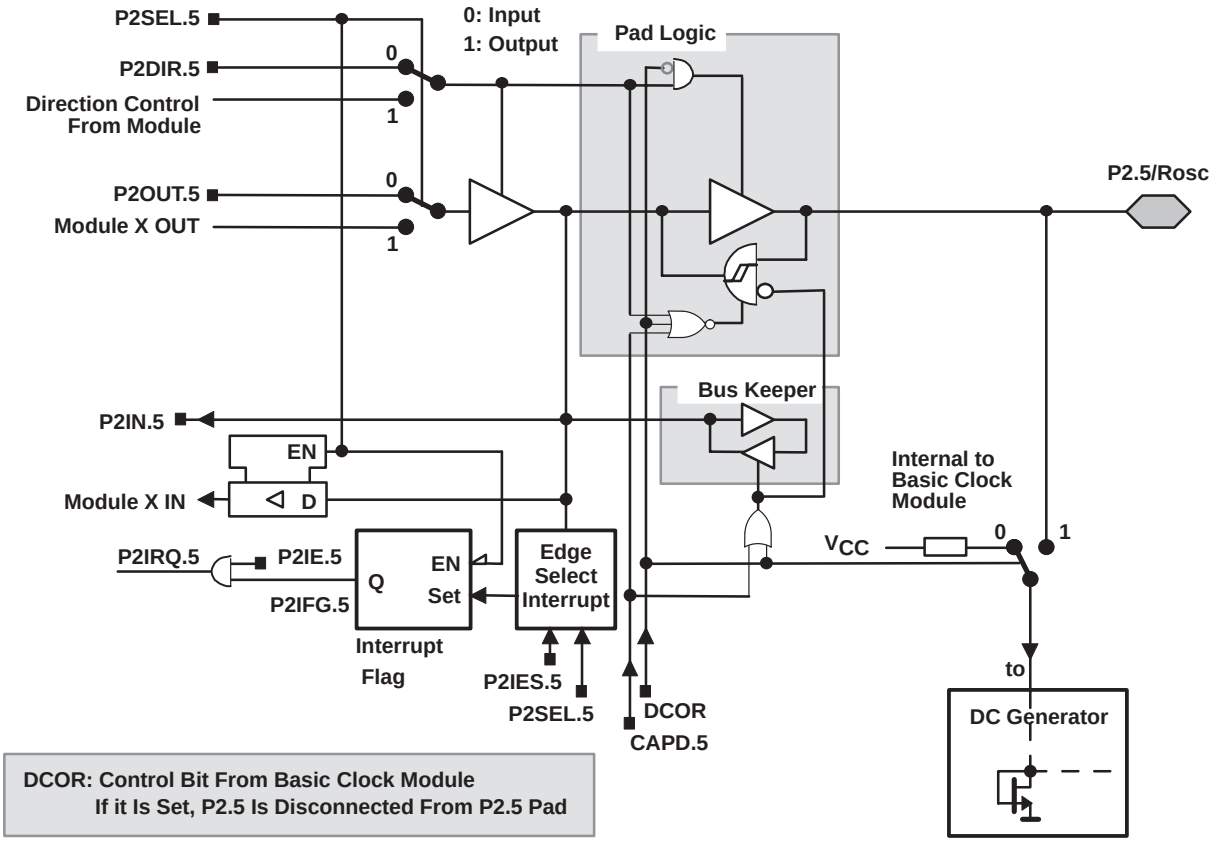

PnSel.x	PnDIR.x	DIRECTION CONTROL FROM MODULE	PnOUT.x	MODULE X OUT	PnIN.x	MODULE X IN	PnIE.x	PnIFG.x	PnIES.x
P2Sel.5	P2DIR.5	P2DIR.5	P2OUT.5	DV_{SS}	P2IN.5	unused	P2IE.5	P2IFG.5	P2IES.5

APPLICATION INFORMATION

input/output schematic (continued)

port P3, P3.0 and P3.4 to P3.7, input/output with Schmitt-trigger

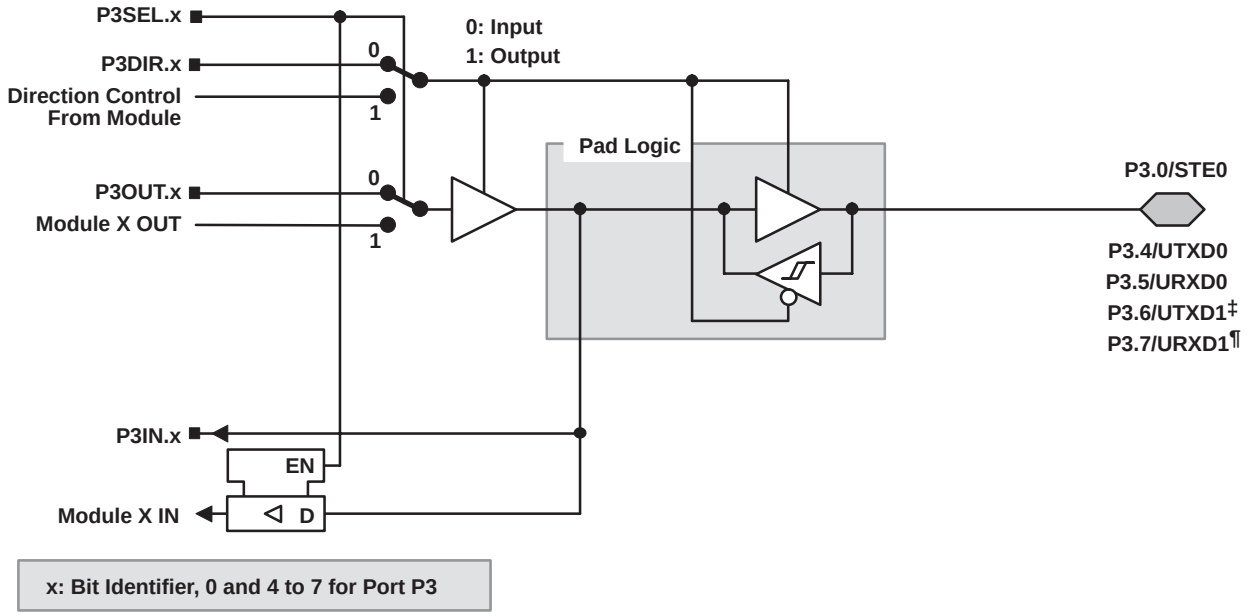

PnSel.x	PnDIR.x	DIRECTION CONTROL FROM MODULE	PnOUT.x	MODULE X OUT	PnIN.x	MODULE X IN
P3Sel.0	P3DIR.0	DV_{SS}	P3OUT.0	DV_{SS}	P3IN.0	STE0
P3Sel.4	P3DIR.4	DV_{CC}	P3OUT.4	UTXD0†	P3IN.4	Unused
P3Sel.5	P3DIR.5	DV_{SS}	P3OUT.5	DV_{SS}	P3IN.5	URXD0§
P3Sel.6	P3DIR.6	DV_{CC}	P3OUT.6	UTXD1‡	P3IN.6	Unused
P3Sel.7	P3DIR.7	DV_{SS}	P3OUT.7	DV_{SS}	P3IN.7	URXD1¶

† Output from USART0 module
‡ Output from USART1 module in x14x(1) configuration, DV_{SS} in x13x configuration
§ Input to USART0 module
¶ Input to USART1 module in x14x(1) configuration, unused in x13x configuration

APPLICATION INFORMATION

input/output schematic (continued)

port P3, P3.1, input/output with Schmitt-trigger

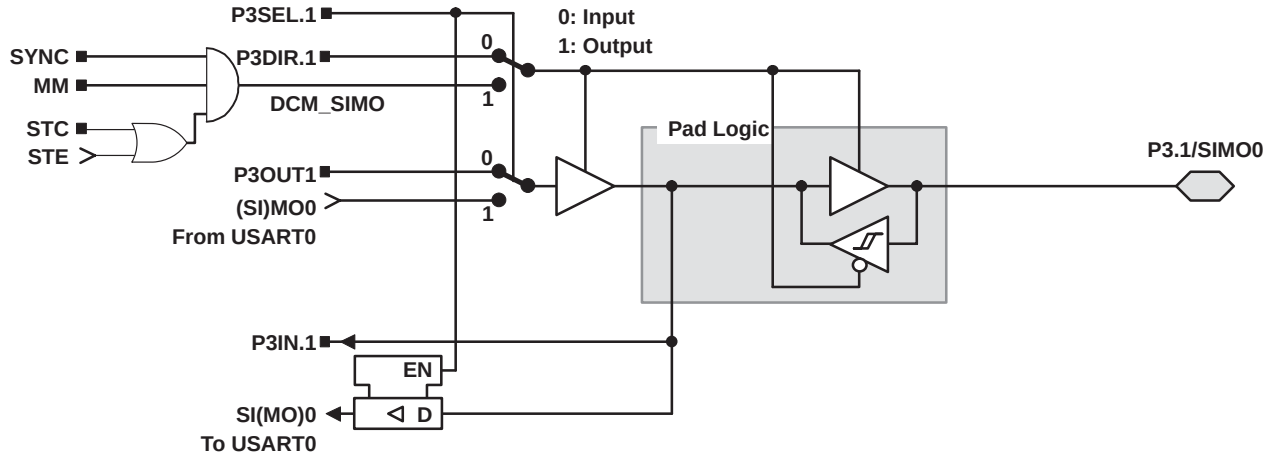

port P3, P3.2, input/output with Schmitt-trigger

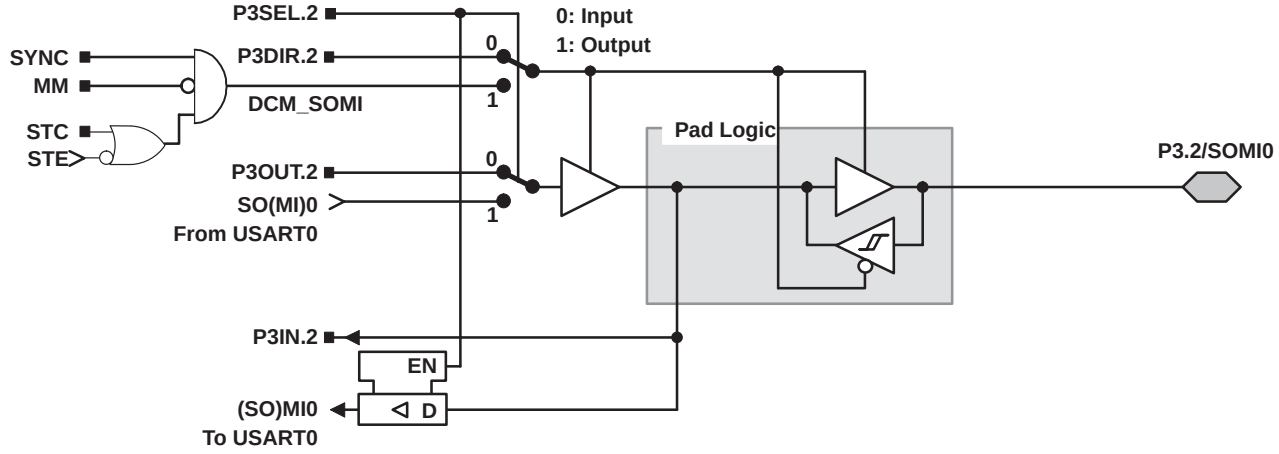

APPLICATION INFORMATION

input/output schematic (continued)

port P3, P3.3, input/output with Schmitt-trigger

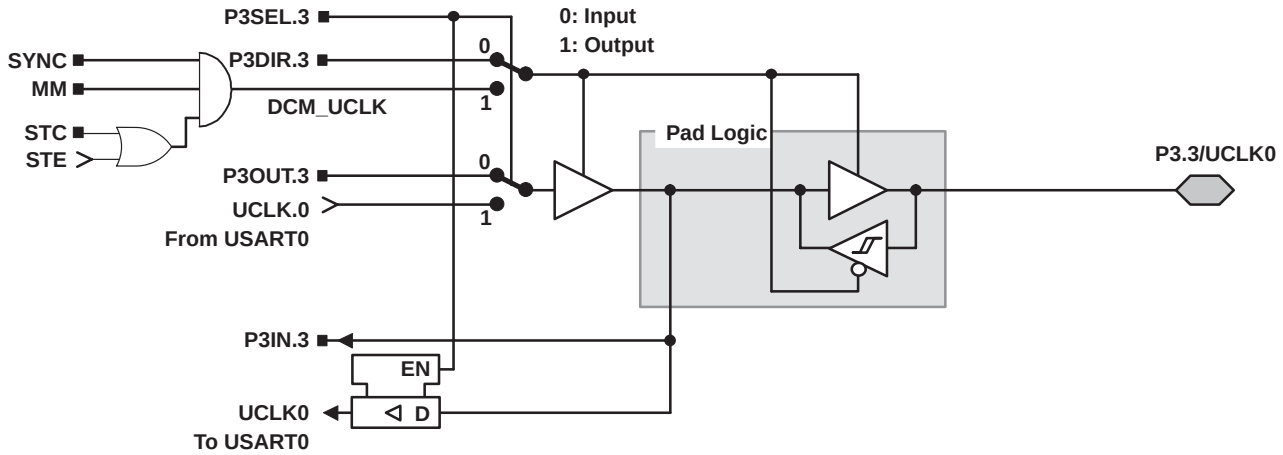

NOTE: UART mode: The UART clock can only be an input. If UART mode and UART function are selected, the P3.3/UCLK0 is always an input.
SPI, slave mode: The clock applied to UCLK0 is used to shift data in and out.
SPI, master mode: The clock to shift data in and out is supplied to connected devices on pin P3.3/UCLK0 (in slave mode).

APPLICATION INFORMATION

input/output schematic (continued)

port P4, P4.0 to P4.6, input/output with Schmitt-trigger

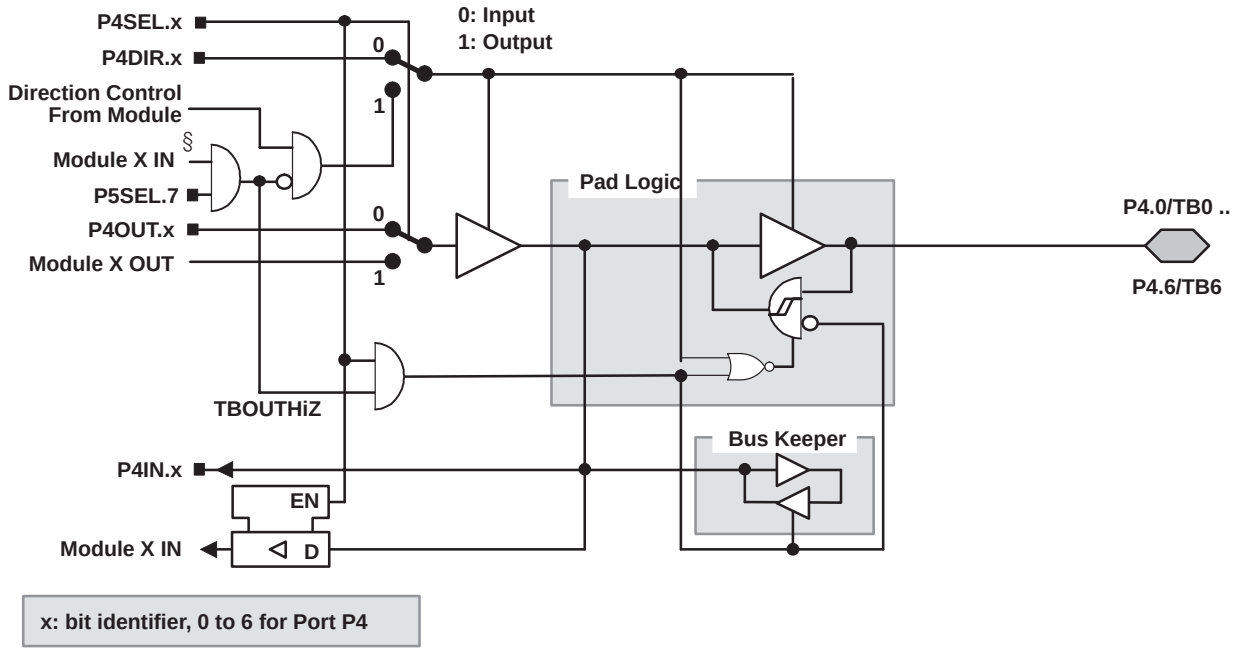

PnSel.x	PnDIR.x	DIRECTION CONTROL FROM MODULE	PnOUT.x	MODULE X OUT	PnIN.x	MODULE X IN
P4Sel.0	P4DIR.0	P4DIR.0	P4OUT.0	Out0 signal†	P4IN.0	CCI0A / CCI0B‡
P4Sel.1	P4DIR.1	P4DIR.1	P4OUT.1	Out1 signal†	P4IN.1	CCI1A / CCI1B‡
P4Sel.2	P4DIR.2	P4DIR.2	P4OUT.2	Out2 signal†	P4IN.2	CCI2A / CCI2B‡
P4Sel.3	P4DIR.3	P4DIR.3	P4OUT.3	Out3 signal†	P4IN.3	CCI3A / CCI3B‡
P4Sel.4	P4DIR.4	P4DIR.4	P4OUT.4	Out4 signal†	P4IN.4	CCI4A / CCI4B‡
P4Sel.5	P4DIR.5	P4DIR.5	P4OUT.5	Out5 signal†	P4IN.5	CCI5A / CCI5B‡
P4Sel.6	P4DIR.6	P4DIR.6	P4OUT.6	Out6 signal†	P4IN.6	CCI6A‡

† Signal from Timer_B
‡ Signal to Timer_B
§ From P5.7

APPLICATION INFORMATION

input/output schematic (continued)

port P4, P4.7, input/output with Schmitt-trigger

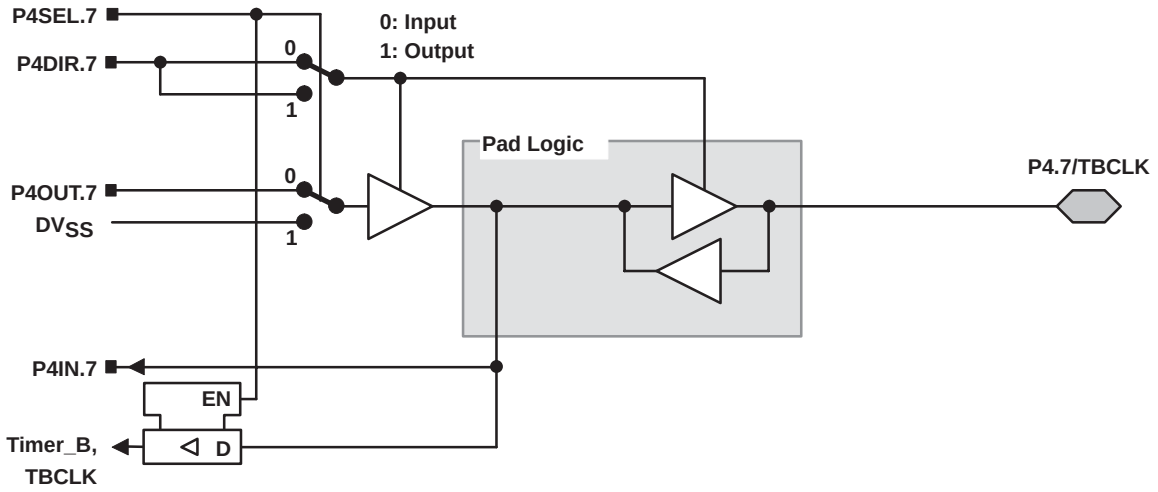

port P5, P5.0 and P5.4 to P5.7, input/output with Schmitt-trigger

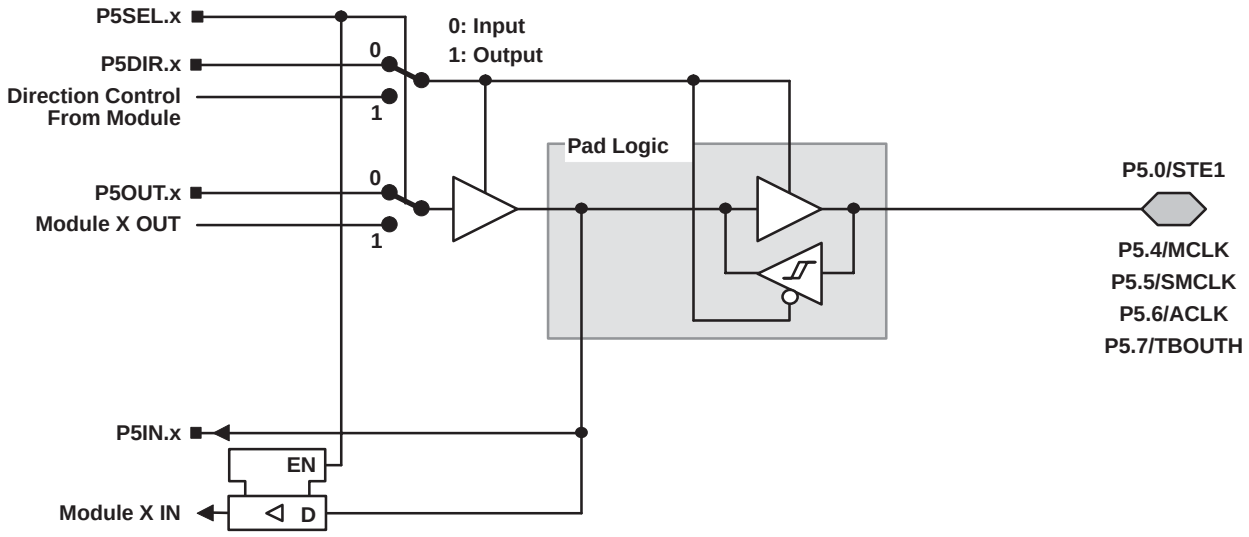

x: Bit Identifier, 0 and 4 to 7 for Port P5

PnSel.x	PnDIR.x	Dir. CONTROL FROM MODULE	PnOUT.x	MODULE X OUT	PnIN.x	MODULE X IN
P5Sel.0	P5DIR.0	DV_{SS}	P5OUT.0	DV_{SS}	P5IN.0	STE.1
P5Sel.4	P5DIR.4	DV_{CC}	P5OUT.4	MCLK	P5IN.4	unused
P5Sel.5	P5DIR.5	DV_{CC}	P5OUT.5	SMCLK	P5IN.5	unused
P5Sel.6	P5DIR.6	DV_{CC}	P5OUT.6	ACLK	P5IN.6	unused
P5Sel.7	P5DIR.7	DV_{SS}	P5OUT.7	DV_{SS}	P5IN.7	TBOUTHiZ

NOTE: TBOUTHiZ signal is used by port module P4, pins P4.0 to P4.6. The function of TBOUTHiZ is mainly useful when used with Timer_B7.

APPLICATION INFORMATION

input/output schematic (continued)

port P5, P5.1, input/output with Schmitt-trigger

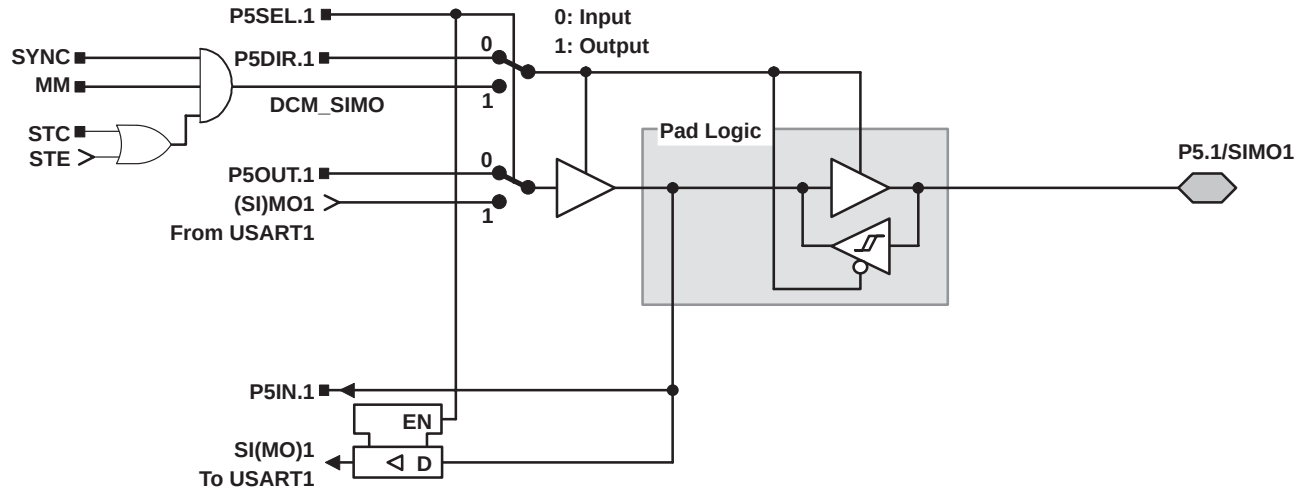

port P5, P5.2, input/output with Schmitt-trigger

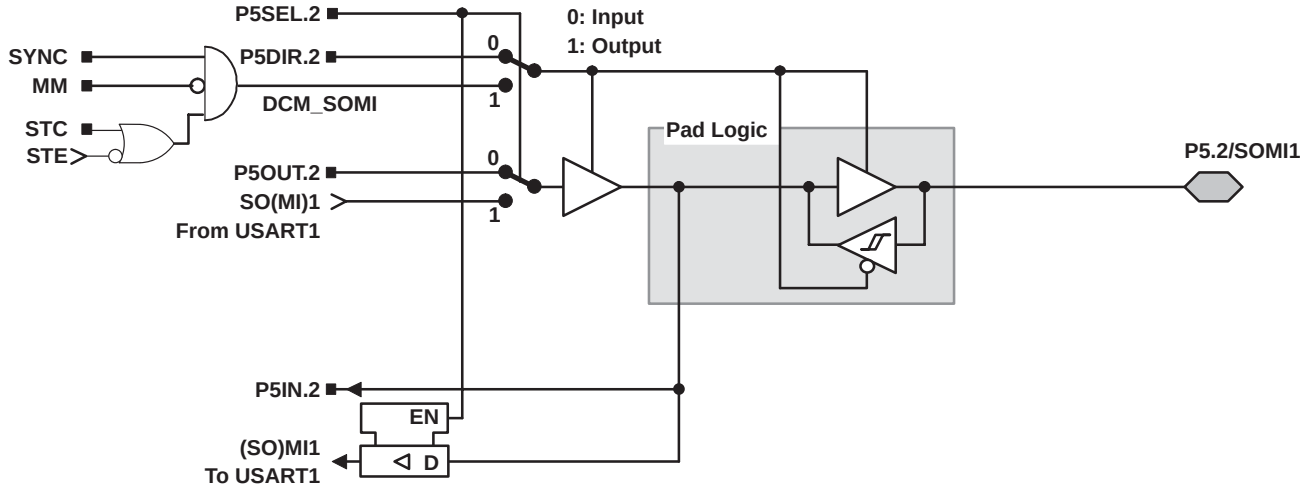

APPLICATION INFORMATION

input/output schematic (continued)

port P5, P5.3, input/output with Schmitt-trigger

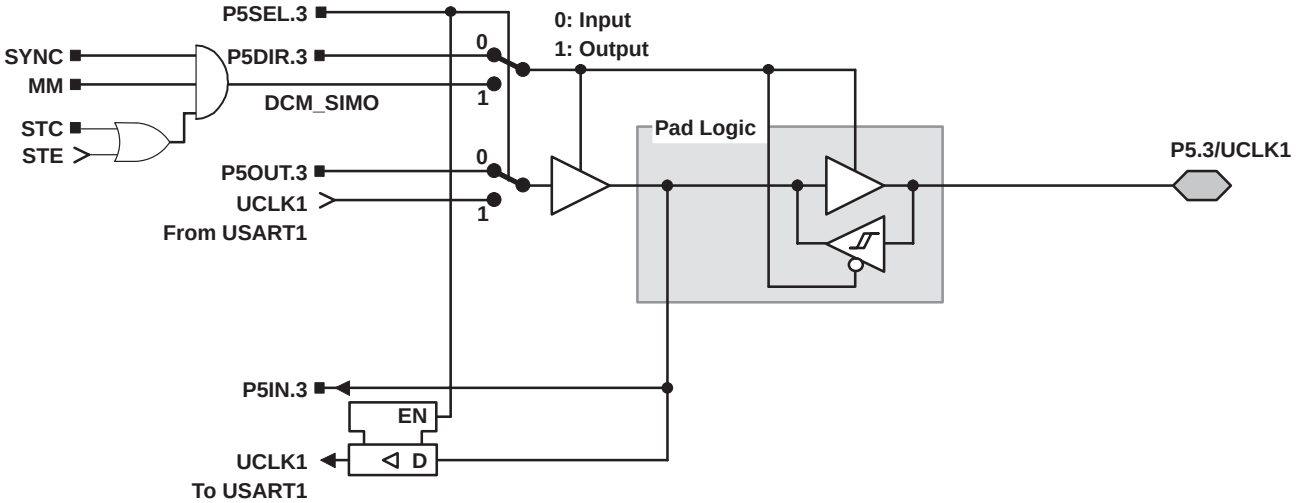

NOTE: UART mode: The UART clock can only be an input. If UART mode and UART function are selected, the P5.3/UCLK1 direction is always input.
SPI, slave mode: The clock applied to UCLK1 is used to shift data in and out.
SPI, master mode: The clock to shift data in and out is supplied to connected devices on pin P5.3/UCLK1 (in slave mode).

APPLICATION INFORMATION

input/output schematic (continued)

port P6, P6.0 to P6.7, input/output with Schmitt-trigger

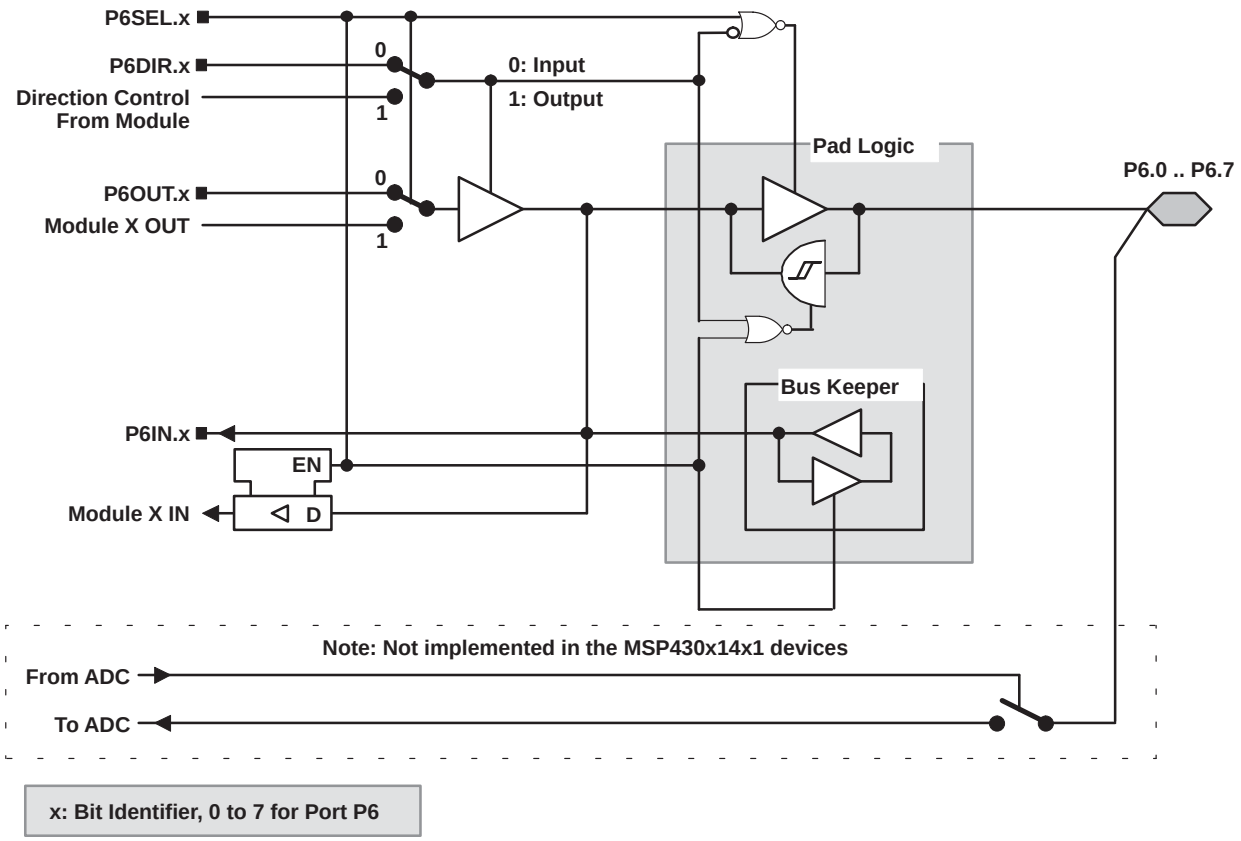

x: Bit Identifier, 0 to 7 for Port P6

NOTE: Analog signals applied to digital gates can cause current flow from the positive to the negative terminal. The throughput current flows if the analog signal is in the range of transitions 0→1 or 1→0. The value of the throughput current depends on the driving capability of the gate. For MSP430, it is approximately 100 µA.
Use P6SEL.x=1 to prevent throughput current. P6SEL.x should be set, even if the signal at the pin is not being used by the ADC12.

PnSel.x	PnDIR.x	DIR. CONTROL FROM MODULE	PnOUT.x	MODULE X OUT	PnIN.x	MODULE X IN
P6Sel.0	P6DIR.0	P6DIR.0	P6OUT.0	DV_{SS}	P6IN.0	unused
P6Sel.1	P6DIR.1	P6DIR.1	P6OUT.1	DV_{SS}	P6IN.1	unused
P6Sel.2	P6DIR.2	P6DIR.2	P6OUT.2	DV_{SS}	P6IN.2	unused
P6Sel.3	P6DIR.3	P6DIR.3	P6OUT.3	DV_{SS}	P6IN.3	unused
P6Sel.4	P6DIR.4	P6DIR.4	P6OUT.4	DV_{SS}	P6IN.4	unused
P6Sel.5	P6DIR.5	P6DIR.5	P6OUT.5	DV_{SS}	P6IN.5	unused
P6Sel.6	P6DIR.6	P6DIR.6	P6OUT.6	DV_{SS}	P6IN.6	unused
P6Sel.7	P6DIR.7	P6DIR.7	P6OUT.7	DV_{SS}	P6IN.7	unused

NOTE: The signal at pins P6.x/Ax is used by the 12-bit ADC module.

APPLICATION INFORMATION

JTAG pins TMS, TCK, TDI/TCLK, TDO/TDI, input/output with Schmitt-trigger

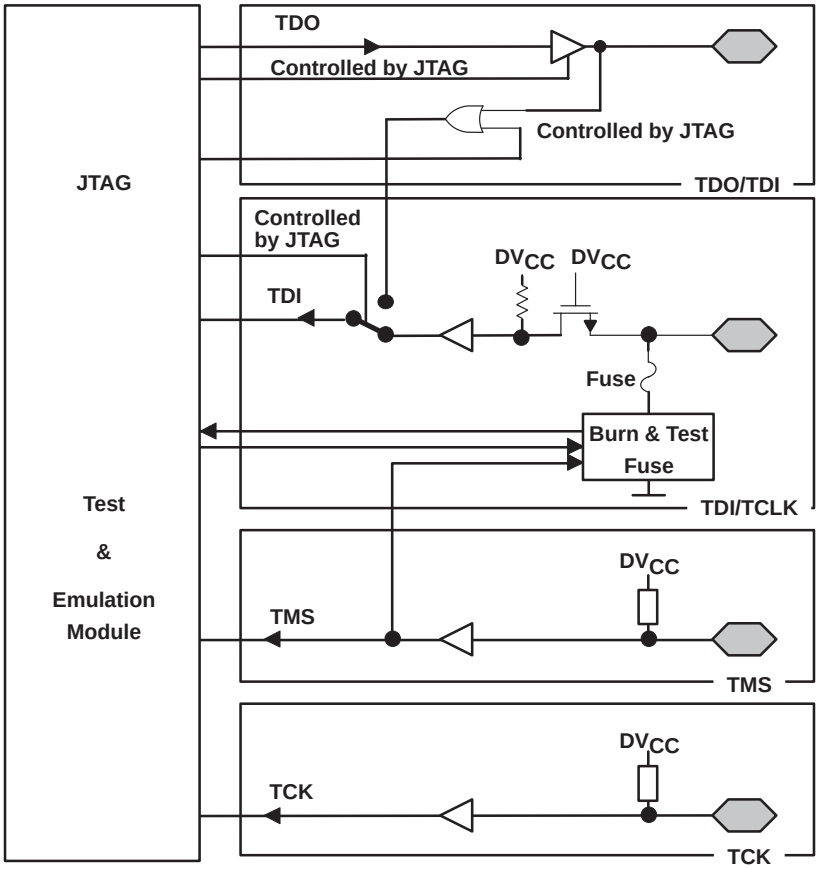

During Programming Activity and During Blowing of the Fuse, Pin TDO/TDI Is Used to Apply the Test Input Data for JTAG Circuitry

APPLICATION INFORMATION

JTAG fuse check mode

MSP430 devices that have the fuse on the TDI/TCLK terminal have a fuse check mode that tests the continuity of the fuse the first time the JTAG port is accessed after a power-on reset (POR). When activated, a fuse check current, I_{TF}, of 1 mA at 3 V, 2.5 mA at 5 V can flow from the TDI/TCLK pin to ground if the fuse is not burned. Care must be taken to avoid accidentally activating the fuse check mode and increasing overall system power consumption.

Activation of the fuse check mode occurs with the first negative edge on the TMS pin after power up or if the TMS is being held low during power up. The second positive edge on the TMS pin deactivates the fuse check mode. After deactivation, the fuse check mode remains inactive until another POR occurs. After each POR the fuse check mode has the potential to be activated.

The fuse check current will only flow when the fuse check mode is active and the TMS pin is in a low state (see Figure 16). Therefore, the additional current flow can be prevented by holding the TMS pin high (default condition).

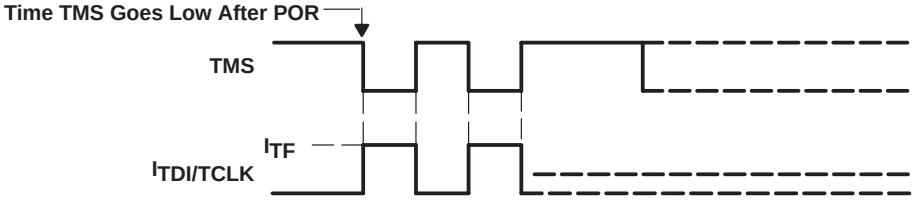

Figure 16. Fuse Check Mode Current: MSP430F13x, MSP430F14x(1)

PACKAGING INFORMATION

Orderable Device	Status (1)	Package Type	Package Drawing	Pins	Package Qty	Eco Plan (2)	Lead/Ball Finish	MSL Peak Temp (3)	Samples (Requires Login)
MSP430A009IPMR	ACTIVE	LQFP	PM	64		Green (RoHS & no Sb/Br)	CU NIPDAU	Level-3-260C-168 HR	
MSP430F133IPAG	ACTIVE	TQFP	PAG	64	160	Green (RoHS & no Sb/Br)	CU NIPDAU	Level-4-260C-72 HR	
MSP430F133IPM	ACTIVE	LQFP	PM	64	160	Green (RoHS & no Sb/Br)	CU NIPDAU	Level-3-260C-168 HR	
MSP430F133IPMR	ACTIVE	LQFP	PM	64	1000	Green (RoHS & no Sb/Br)	CU NIPDAU	Level-3-260C-168 HR	
MSP430F133IRTDR	ACTIVE	VQFN	RTD	64	2500	Green (RoHS & no Sb/Br)	CU SN	Level-3-260C-168 HR	
MSP430F133IRTDT	ACTIVE	VQFN	RTD	64	250	Green (RoHS & no Sb/Br)	CU SN	Level-3-260C-168 HR	
MSP430F135IPAG	ACTIVE	TQFP	PAG	64	160	Green (RoHS & no Sb/Br)	CU NIPDAU	Level-4-260C-72 HR	
MSP430F135IPM	ACTIVE	LQFP	PM	64	160	Green (RoHS & no Sb/Br)	CU NIPDAU	Level-3-260C-168 HR	
MSP430F135IPMR	ACTIVE	LQFP	PM	64	1000	Green (RoHS & no Sb/Br)	CU NIPDAU	Level-3-260C-168 HR	
MSP430F135IRTDR	ACTIVE	VQFN	RTD	64	2500	Green (RoHS & no Sb/Br)	CU SN	Level-3-260C-168 HR	
MSP430F135IRTDT	ACTIVE	VQFN	RTD	64	250	Green (RoHS & no Sb/Br)	CU SN	Level-3-260C-168 HR	
MSP430F1471IPM	ACTIVE	LQFP	PM	64	160	Green (RoHS & no Sb/Br)	CU NIPDAU	Level-3-260C-168 HR	
MSP430F1471IPMR	ACTIVE	LQFP	PM	64	1000	Green (RoHS & no Sb/Br)	CU NIPDAU	Level-3-260C-168 HR	
MSP430F1471IPMRG	ACTIVE	LQFP	PM	64		TBD	Call TI	Call TI	
MSP430F1471IPMRG4	ACTIVE	LQFP	PM	64	1000	Green (RoHS & no Sb/Br)	CU NIPDAU	Level-3-260C-168 HR	
MSP430F1471IRTDR	ACTIVE	VQFN	RTD	64	2500	Green (RoHS & no Sb/Br)	CU SN	Level-3-260C-168 HR	
MSP430F1471IRTDT	ACTIVE	VQFN	RTD	64	250	Green (RoHS & no Sb/Br)	CU SN	Level-3-260C-168 HR	

Orderable Device	Status (1)	Package Type	Package Drawing	Pins	Package Qty	Eco Plan (2)	Lead/Ball Finish	MSL Peak Temp (3)	Samples (Requires Login)
MSP430F147IPAG	ACTIVE	TQFP	PAG	64	160	Green (RoHS & no Sb/Br)	CU NIPDAU	Level-4-260C-72 HR	
MSP430F147IPM	ACTIVE	LQFP	PM	64	160	Green (RoHS & no Sb/Br)	CU NIPDAU	Level-3-260C-168 HR	
MSP430F147IPMR	ACTIVE	LQFP	PM	64	1000	Green (RoHS & no Sb/Br)	CU NIPDAU	Level-3-260C-168 HR	
MSP430F147IPMR-KAM	ACTIVE	LQFP	PM	64		Green (RoHS & no Sb/Br)	CU NIPDAU	Level-3-260C-168 HR	
MSP430F147IPMRG4	ACTIVE	LQFP	PM	64	1000	Green (RoHS & no Sb/Br)	CU NIPDAU	Level-3-260C-168 HR	
MSP430F147IRTDR	ACTIVE	VQFN	RTD	64	2500	Green (RoHS & no Sb/Br)	CU SN	Level-3-260C-168 HR	
MSP430F147IRTDT	ACTIVE	VQFN	RTD	64	250	Green (RoHS & no Sb/Br)	CU SN	Level-3-260C-168 HR	
MSP430F1481IPM	ACTIVE	LQFP	PM	64	160	Green (RoHS & no Sb/Br)	CU NIPDAU	Level-3-260C-168 HR	
MSP430F1481IPMR	ACTIVE	LQFP	PM	64	1000	Green (RoHS & no Sb/Br)	CU NIPDAU	Level-3-260C-168 HR	
MSP430F1481IRTDR	ACTIVE	VQFN	RTD	64	2500	Green (RoHS & no Sb/Br)	CU SN	Level-3-260C-168 HR	
MSP430F1481IRTDT	ACTIVE	VQFN	RTD	64	250	Green (RoHS & no Sb/Br)	CU SN	Level-3-260C-168 HR	
MSP430F148IPAG	ACTIVE	TQFP	PAG	64	160	Green (RoHS & no Sb/Br)	CU NIPDAU	Level-4-260C-72 HR	
MSP430F148IPM	ACTIVE	LQFP	PM	64	160	Green (RoHS & no Sb/Br)	CU NIPDAU	Level-3-260C-168 HR	
MSP430F148IPMR	ACTIVE	LQFP	PM	64	1000	Green (RoHS & no Sb/Br)	CU NIPDAU	Level-3-260C-168 HR	
MSP430F148IRTDR	ACTIVE	VQFN	RTD	64	2500	Green (RoHS & no Sb/Br)	CU SN	Level-3-260C-168 HR	
MSP430F148IRTDT	ACTIVE	VQFN	RTD	64	250	Green (RoHS & no Sb/Br)	CU SN	Level-3-260C-168 HR	
MSP430F1491IPM	ACTIVE	LQFP	PM	64	160	Green (RoHS & no Sb/Br)	CU NIPDAU	Level-3-260C-168 HR	
MSP430F1491IPMG4	ACTIVE	LQFP	PM	64	160	Green (RoHS & no Sb/Br)	CU NIPDAU	Level-3-260C-168 HR	

Orderable Device	Status (1)	Package Type	Package Drawing	Pins	Package Qty	Eco Plan (2)	Lead/Ball Finish	MSL Peak Temp (3)	Samples (Requires Login)
MSP430F1491IPMR	ACTIVE	LQFP	PM	64	1000	Green (RoHS & no Sb/Br)	CU NIPDAU	Level-3-260C-168 HR	
MSP430F1491IPMRG4	ACTIVE	LQFP	PM	64	1000	Green (RoHS & no Sb/Br)	CU NIPDAU	Level-3-260C-168 HR	
MSP430F1491IRTDR	ACTIVE	VQFN	RTD	64	2500	Green (RoHS & no Sb/Br)	CU SN	Level-3-260C-168 HR	
MSP430F1491IRTDT	ACTIVE	VQFN	RTD	64	250	Green (RoHS & no Sb/Br)	CU SN	Level-3-260C-168 HR	
MSP430F149CY	ACTIVE	DIESALE	Y	0	49	Green (RoHS & no Sb/Br)	Call TI	N / A for Pkg Type	
MSP430F149IPAG	ACTIVE	TQFP	PAG	64	160	Green (RoHS & no Sb/Br)	CU NIPDAU	Level-4-260C-72 HR	
MSP430F149IPAGR	ACTIVE	TQFP	PAG	64	1500	Green (RoHS & no Sb/Br)	CU NIPDAU	Level-4-260C-72 HR	
MSP430F149IPM	ACTIVE	LQFP	PM	64	160	Green (RoHS & no Sb/Br)	CU NIPDAU	Level-3-260C-168 HR	
MSP430F149IPMG4	ACTIVE	LQFP	PM	64	160	Green (RoHS & no Sb/Br)	CU NIPDAU	Level-3-260C-168 HR	
MSP430F149IPMR	ACTIVE	LQFP	PM	64	1000	Green (RoHS & no Sb/Br)	CU NIPDAU	Level-3-260C-168 HR	
MSP430F149IPMRG4	ACTIVE	LQFP	PM	64	1000	Green (RoHS & no Sb/Br)	CU NIPDAU	Level-3-260C-168 HR	
MSP430F149IRTDR	ACTIVE	VQFN	RTD	64	2500	Green (RoHS & no Sb/Br)	CU SN	Level-3-260C-168 HR	
MSP430F149IRTDT	ACTIVE	VQFN	RTD	64	250	Green (RoHS & no Sb/Br)	CU SN	Level-3-260C-168 HR	

(1) The marketing status values are defined as follows:
ACTIVE: Product device recommended for new designs.
LIFEBUY: TI has announced that the device will be discontinued, and a lifetime-buy period is in effect.
NRND: Not recommended for new designs. Device is in production to support existing customers, but TI does not recommend using this part in a new design.
PREVIEW: Device has been announced but is not in production. Samples may or may not be available.
OBSOLETE: TI has discontinued the production of the device.

(2) Eco Plan - The planned eco-friendly classification: Pb-Free (RoHS), Pb-Free (RoHS Exempt), or Green (RoHS & no Sb/Br) - please check http://www.ti.com/productcontent for the latest availability information and additional product content details.
TBD: The Pb-Free/Green conversion plan has not been defined.

Pb-Free (RoHS): TI's terms "Lead-Free" or "Pb-Free" mean semiconductor products that are compatible with the current RoHS requirements for all 6 substances, including the requirement that lead not exceed 0.1% by weight in homogeneous materials. Where designed to be soldered at high temperatures, TI Pb-Free products are suitable for use in specified lead-free processes.
Pb-Free (RoHS Exempt): This component has a RoHS exemption for either 1) lead-based flip-chip solder bumps used between the die and package, or 2) lead-based die adhesive used between the die and leadframe. The component is otherwise considered Pb-Free (RoHS compatible) as defined above.
Green (RoHS & no Sb/Br): TI defines "Green" to mean Pb-Free (RoHS compatible), and free of Bromine (Br) and Antimony (Sb) based flame retardants (Br or Sb do not exceed 0.1% by weight in homogeneous material)

(3) MSL, Peak Temp. -- The Moisture Sensitivity Level rating according to the JEDEC industry standard classifications, and peak solder temperature.

Important Information and Disclaimer: The information provided on this page represents TI's knowledge and belief as of the date that it is provided. TI bases its knowledge and belief on information provided by third parties, and makes no representation or warranty as to the accuracy of such information. Efforts are underway to better integrate information from third parties. TI has taken and continues to take reasonable steps to provide representative and accurate information but may not have conducted destructive testing or chemical analysis on incoming materials and chemicals. TI and TI suppliers consider certain information to be proprietary, and thus CAS numbers and other limited information may not be available for release.

In no event shall TI's liability arising out of such information exceed the total purchase price of the TI part(s) at issue in this document sold by TI to Customer on an annual basis.

RTD (S-PVQFN-N64) PLASTIC QUAD FLATPACK NO-LEAD

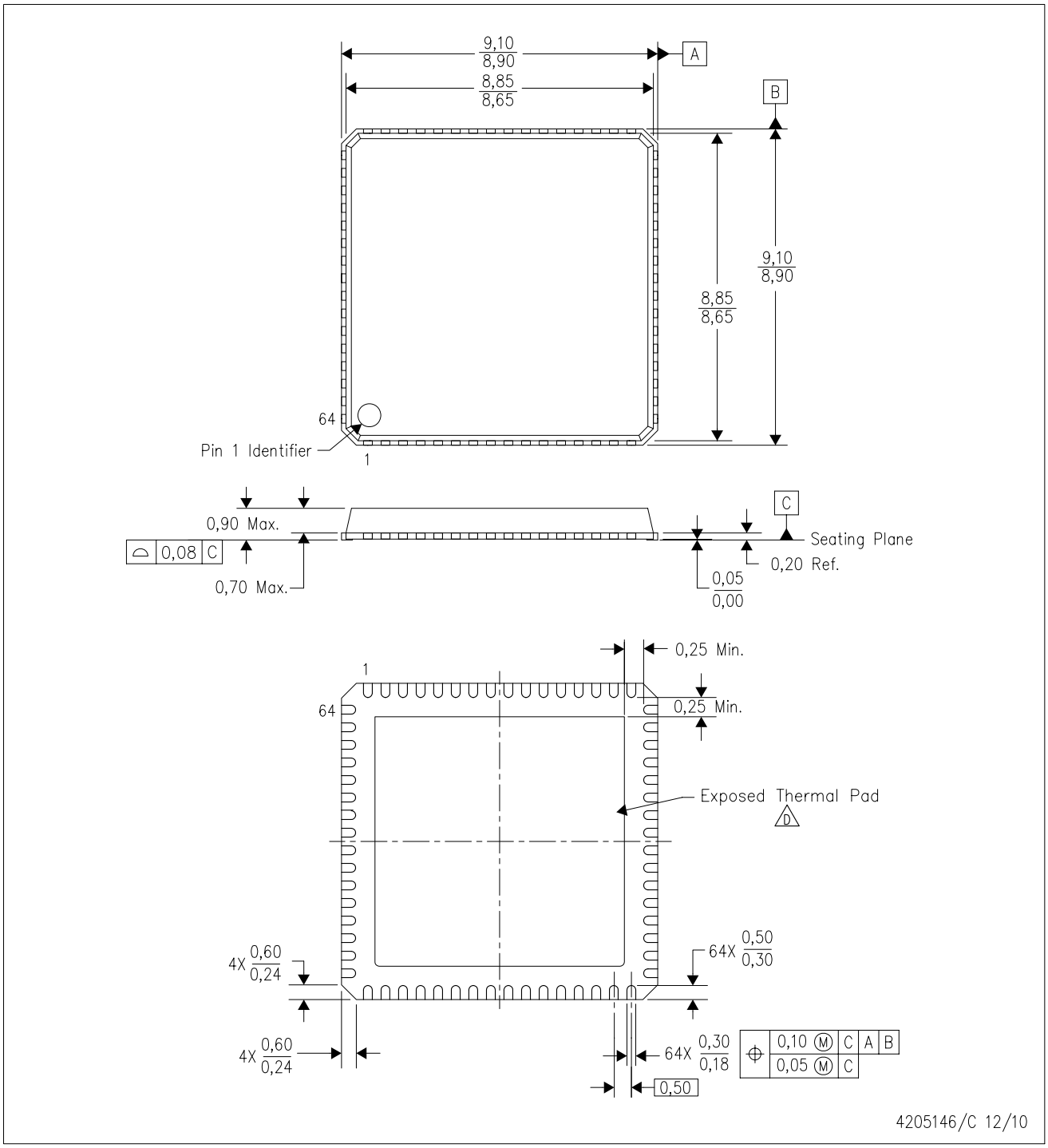

NOTES:
A. All linear dimensions are in millimeters. Dimensioning and tolerancing per ASME Y14.5M–1994.
B. This drawing is subject to change without notice.
C. QFN (Quad Flatpack No-Lead) Package configuration.
D. The package thermal pad must be soldered to the board for thermal and mechanical performance. See the Product Data Sheet for details regarding the exposed thermal pad dimensions.

RTD (S–PVQFN–N64) PLASTIC QUAD FLATPACK NO–LEAD

THERMAL INFORMATION

This package incorporates an exposed thermal pad that is designed to be attached directly to an external heatsink. The thermal pad must be soldered directly to the printed circuit board (PCB). After soldering, the PCB can be used as a heatsink. In addition, through the use of thermal vias, the thermal pad can be attached directly to the appropriate copper plane shown in the electrical schematic for the device, or alternatively, can be attached to a special heatsink structure designed into the PCB. This design optimizes the heat transfer from the integrated circuit (IC).

For information on the Quad Flatpack No–Lead (QFN) package and its advantages, refer to Application Report, QFN/SON PCB Attachment, Texas Instruments Literature No. SLUA271. This document is available at www.ti.com.

The exposed thermal pad dimensions for this package are shown in the following illustration.

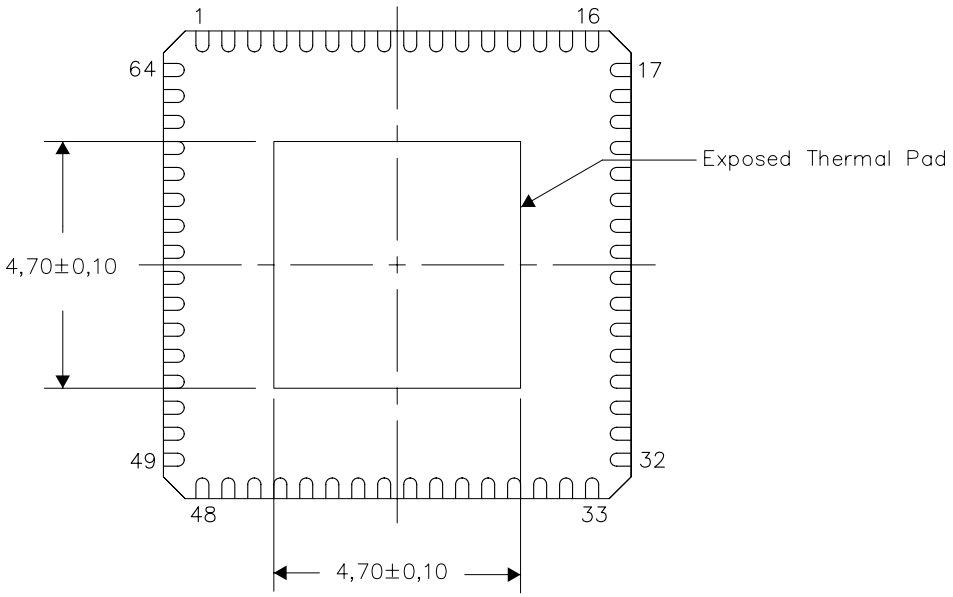

Bottom View

Exposed Thermal Pad Dimensions

4206338–3/E 12/10

NOTE: A. All linear dimensions are in millimeters

RTD (S–PVQFN–N64) PLASTIC QUAD FLATPACK NO–LEAD

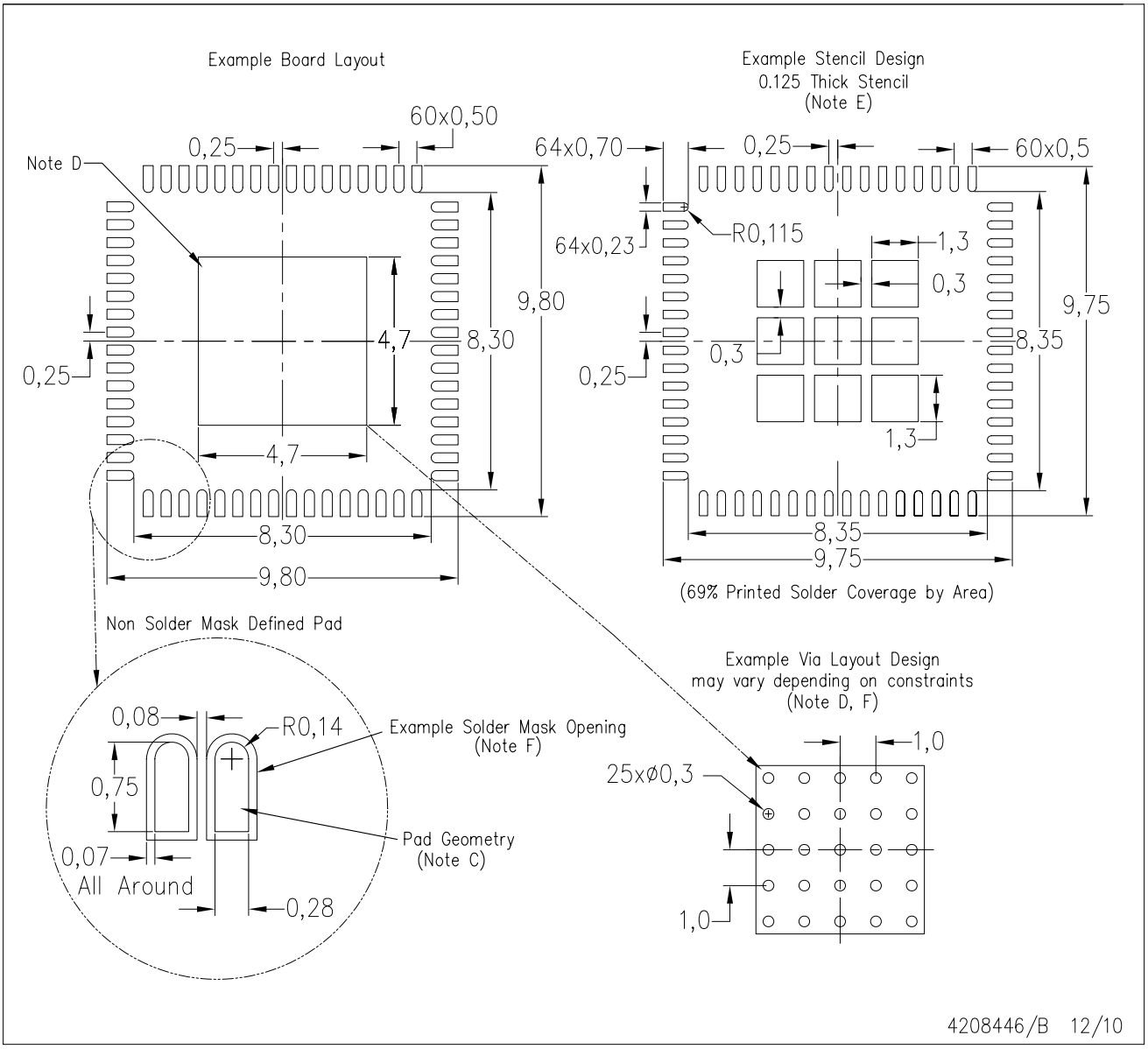

NOTES:
A. All linear dimensions are in millimeters.
B. This drawing is subject to change without notice.
C. Publication IPC–7351 is recommended for alternate designs.
D. This package is designed to be soldered to a thermal pad on the board. Refer to Application Note, Quad Flat–Pack Package, Texas Instruments Literature No. SLUA271, and also the Product Data Sheets for specific thermal information, via requirements, and recommended board layout. These documents are available at www.ti.com <http://www.ti.com>.
E. Laser cutting apertures with electropolish and also rounding corners will offer better paste release. Customers should contact their board assembly site for stencil design recommendations. Refer to IPC 7525 for stencil design considerations.
F. Customer should contact their board fabrication site for recommended solder mask tolerances and vias tenting recommendations for vias placed int the thermal pad.

PAG (S-PQFP-G64) **PLASTIC QUAD FLATPACK**

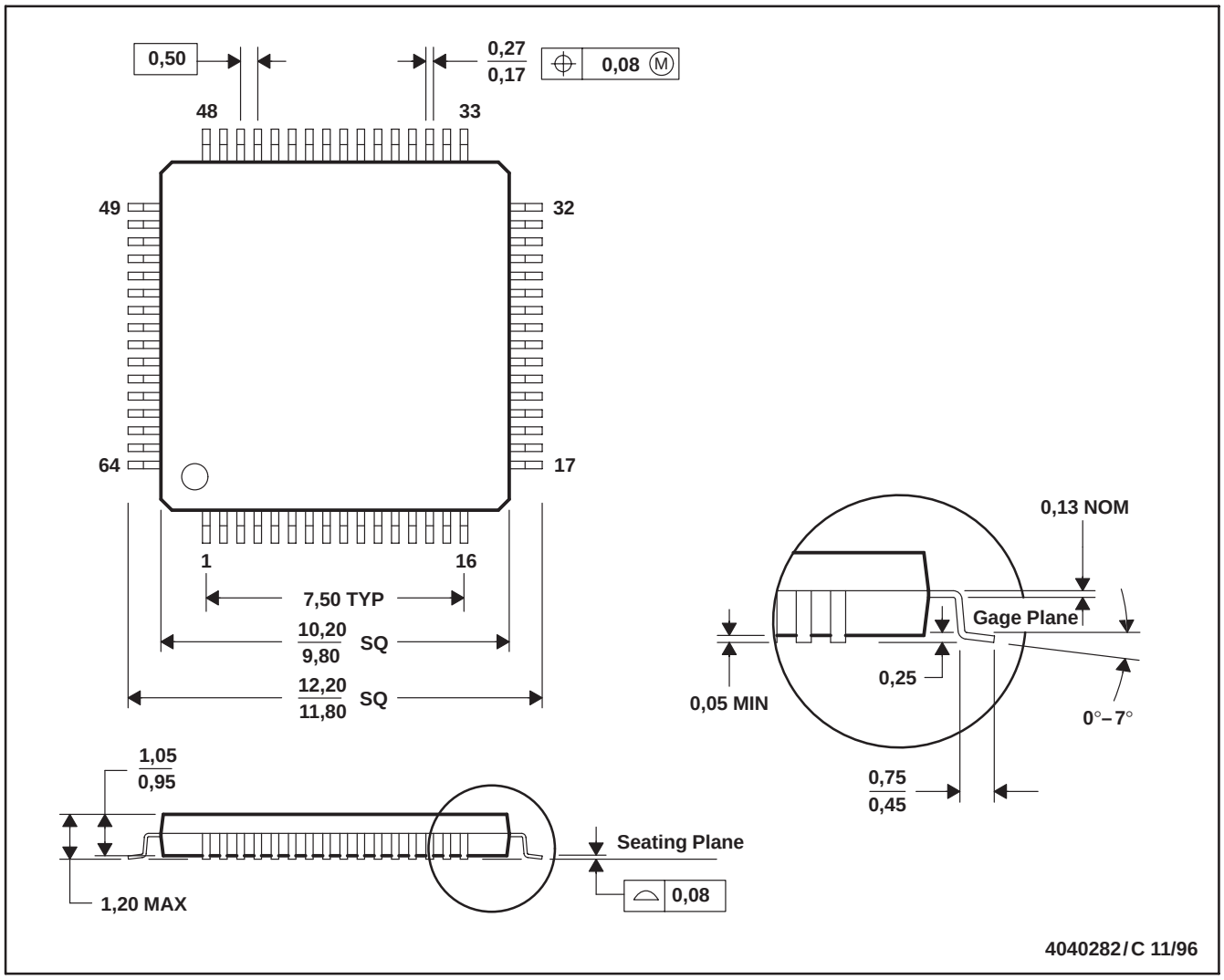

NOTES: A. All linear dimensions are in millimeters.
B. This drawing is subject to change without notice.
C. Falls within JEDEC MS-026

PM (S-PQFP-G64) **PLASTIC QUAD FLATPACK**

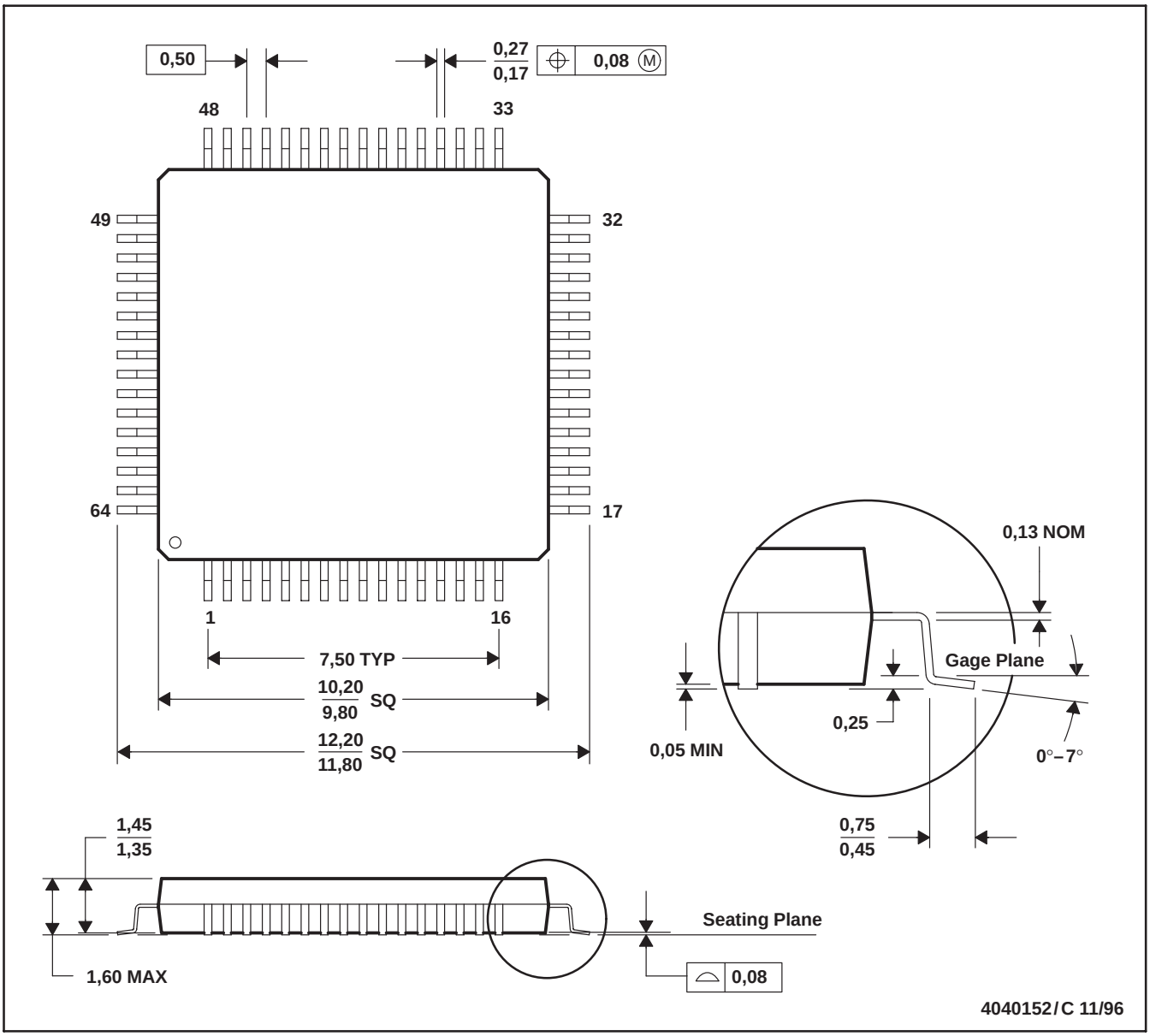

NOTES: A. All linear dimensions are in millimeters.
B. This drawing is subject to change without notice.
C. Falls within JEDEC MS-026
D. May also be thermally enhanced plastic with leads connected to the die pads.

PM (S–PQFP–G64) PLASTIC QUAD FLATPACK

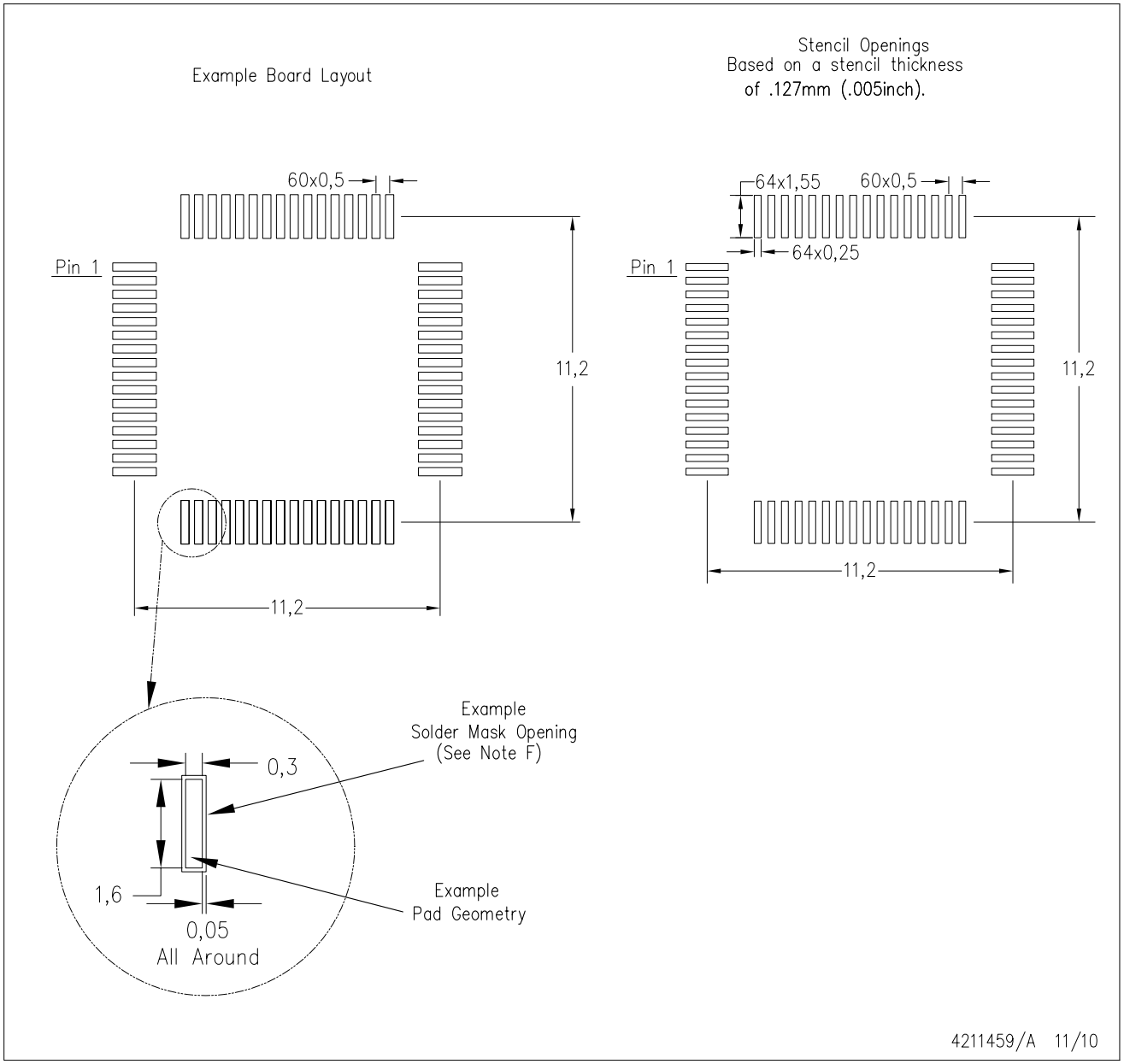

NOTES:
A. All linear dimensions are in millimeters.
B. This drawing is subject to change without notice.
C. Laser cutting apertures with trapezoidal walls and also rounding corners will offer better paste release. Customers should contact their board assembly site for stencil design recommendations. Example stencil design based on a 50% volumetric metal load solder paste. Refer to IPC–7525 for other stencil recommendations.
D. Customers should contact their board fabrication site for solder mask tolerances between and around signal pads.

IMPORTANT NOTICE

Texas Instruments Incorporated and its subsidiaries (TI) reserve the right to make corrections, enhancements, improvements and other changes to its semiconductor products and services per JESD46, latest issue, and to discontinue any product or service per JESD48, latest issue. Buyers should obtain the latest relevant information before placing orders and should verify that such information is current and complete. All semiconductor products (also referred to herein as “components”) are sold subject to TI’s terms and conditions of sale supplied at the time of order acknowledgment.

TI warrants performance of its components to the specifications applicable at the time of sale, in accordance with the warranty in TI’s terms and conditions of sale of semiconductor products. Testing and other quality control techniques are used to the extent TI deems necessary to support this warranty. Except where mandated by applicable law, testing of all parameters of each component is not necessarily performed.

TI assumes no liability for applications assistance or the design of Buyers’ products. Buyers are responsible for their products and applications using TI components. To minimize the risks associated with Buyers’ products and applications, Buyers should provide adequate design and operating safeguards.

TI does not warrant or represent that any license, either express or implied, is granted under any patent right, copyright, mask work right, or other intellectual property right relating to any combination, machine, or process in which TI components or services are used. Information published by TI regarding third-party products or services does not constitute a license to use such products or services or a warranty or endorsement thereof. Use of such information may require a license from a third party under the patents or other intellectual property of the third party, or a license from TI under the patents or other intellectual property of TI.

Reproduction of significant portions of TI information in TI data books or data sheets is permissible only if reproduction is without alteration and is accompanied by all associated warranties, conditions, limitations, and notices. TI is not responsible or liable for such altered documentation. Information of third parties may be subject to additional restrictions.

Resale of TI components or services with statements different from or beyond the parameters stated by TI for that component or service voids all express and any implied warranties for the associated TI component or service and is an unfair and deceptive business practice. TI is not responsible or liable for any such statements.

Buyer acknowledges and agrees that it is solely responsible for compliance with all legal, regulatory and safety-related requirements concerning its products, and any use of TI components in its applications, notwithstanding any applications-related information or support that may be provided by TI. Buyer represents and agrees that it has all the necessary expertise to create and implement safeguards which anticipate dangerous consequences of failures, monitor failures and their consequences, lessen the likelihood of failures that might cause harm and take appropriate remedial actions. Buyer will fully indemnify TI and its representatives against any damages arising out of the use of any TI components in safety-critical applications.

In some cases, TI components may be promoted specifically to facilitate safety-related applications. With such components, TI’s goal is to help enable customers to design and create their own end-product solutions that meet applicable functional safety standards and requirements. Nonetheless, such components are subject to these terms.

No TI components are authorized for use in FDA Class III (or similar life-critical medical equipment) unless authorized officers of the parties have executed a special agreement specifically governing such use.

Only those TI components which TI has specifically designated as military grade or “enhanced plastic” are designed and intended for use in military/aerospace applications or environments. Buyer acknowledges and agrees that any military or aerospace use of TI components which have ***not*** been so designated is solely at the Buyer's risk, and that Buyer is solely responsible for compliance with all legal and regulatory requirements in connection with such use.

TI has specifically designated certain components as meeting ISO/TS16949 requirements, mainly for automotive use. In any case of use of non-designated products, TI will not be responsible for any failure to meet ISO/TS16949.

Products		**Applications**	
Audio	www.ti.com/audio	Automotive and Transportation	www.ti.com/automotive
Amplifiers	amplifier.ti.com	Communications and Telecom	www.ti.com/communications
Data Converters	dataconverter.ti.com	Computers and Peripherals	www.ti.com/computers
DLP® Products	www.dlp.com	Consumer Electronics	www.ti.com/consumer-apps
DSP	dsp.ti.com	Energy and Lighting	www.ti.com/energy
Clocks and Timers	www.ti.com/clocks	Industrial	www.ti.com/industrial
Interface	interface.ti.com	Medical	www.ti.com/medical
Logic	logic.ti.com	Security	www.ti.com/security
Power Mgmt	power.ti.com	Space, Avionics and Defense	www.ti.com/space-avionics-defense
Microcontrollers	microcontroller.ti.com	Video and Imaging	www.ti.com/video
RFID	www.ti-rfid.com		
OMAP Applications Processors	www.ti.com/omap	**TI E2E Community**	e2e.ti.com
Wireless Connectivity	www.ti.com/wirelessconnectivity		

Mailing Address: Texas Instruments, Post Office Box 655303, Dallas, Texas 75265
Copyright © 2013, Texas Instruments Incorporated

Компания «ЭлектроПласт» предлагает заключение долгосрочных отношений при поставках импортных электронных компонентов на взаимовыгодных условиях!

Наши преимущества:

- Оперативные поставки широкого спектра электронных компонентов отечественного и импортного производства напрямую от производителей и с крупнейших мировых складов;
- Поставка более 17-ти миллионов наименований электронных компонентов;
- Поставка сложных, дефицитных, либо снятых с производства позиций;
- Оперативные сроки поставки под заказ (от 5 рабочих дней);
- Экспресс доставка в любую точку России;
- Техническая поддержка проекта, помощь в подборе аналогов, поставка прототипов;
- Система менеджмента качества сертифицирована по Международному стандарту ISO 9001;
- Лицензия ФСБ на осуществление работ с использованием сведений, составляющих государственную тайну;
- Поставка специализированных компонентов (Xilinx, Altera, Analog Devices, Intersil, Interpoint, Microsemi, Aeroflex, Peregrine, Syfer, Eurofarad, Texas Instrument, Miteq, Cobham, E2V, MA-COM, Hittite, Mini-Circuits,General Dynamics и др.);

Помимо этого, одним из направлений компании «ЭлектроПласт» является направление «Источники питания». Мы предлагаем Вам помощь Конструкторского отдела:

- Подбор оптимального решения, техническое обоснование при выборе компонента;
- Подбор аналогов;
- Консультации по применению компонента;
- Поставка образцов и прототипов;
- Техническая поддержка проекта;
- Защита от снятия компонента с производства.

Как с нами связаться

Телефон: 8 (812) 309 58 32 (многоканальный)
Факс: 8 (812) 320-02-42
Электронная почта: org@eplast1.ru
Адрес: 198099, г. Санкт-Петербург, ул. Калинина, дом 2, корпус 4, литера А.