# Evaluation Board User Guide
## UG-472

One Technology Way • P.O. Box 9106 • Norwood, MA 02062-9106, U.S.A. • Tel: 781.329.4700 • Fax: 781.461.3113 • www.analog.com

# Evaluating the AD5142A Digital Potentiometer

## FEATURES

**Full featured evaluation board in conjunction with low voltage digiPOT motherboard (EVAL-MB-LV-SDZ)**
**Various test circuits**
**Various ac/dc input signals**
**PC control via a separately purchased system demonstration platform (SDP-B or SDP-S)**
**PC software for control**

## PACKAGE CONTENTS

**EVAL-AD5142ADBZ board**
**EVAL-MB-LV-SDZ motherboard**
**CD that includes**
- **Self-installing software that allows users to control the board and exercise all functions of the device**
- **Electronic version of the AD5142A data sheet**
- **Electronic version of the UG-472 user guide**

## GENERAL DESCRIPTION

This user guide describes the evaluation board for evaluating the AD5142A—a quad-channel, 256-position, nonvolatile memory, digital potentiometer. With versatile programmability, the AD5142A allows multiple modes of operation, including read/write access in the RDAC and EEMEM registers, increment/decrement of resistance, resistance changes in ±6 dB scales, wiper setting readback, and extra EEMEM for storing user-defined information, such as memory data for other components or a lookup table.

The AD5142A supports a dual-supply ±2.25 V to ±2.75 V operation and a single-supply 2.3 V to 5.5 V operation, making the device suitable for battery-powered applications and many other applications. In addition, the AD5142A uses a versatile $I^2C$-compatible serial interface that operates in fast mode, allowing speeds of up to 400 kbps and supporting the selection of up to nine different $I^2C$ addresses. The EVAL-AD5142DBZ can operate in single-supply or dual-supply mode and incorporates an internal power supply from the USB.

Complete specifications for the AD5142A part can be found in the AD5142A data sheet, which is available from Analog Devices, Inc., and should be consulted in conjunction with this user guide when using the evaluation board.

## EVAL-AD5142ADBZ WITH MOTHERBOARD AND SDP-S

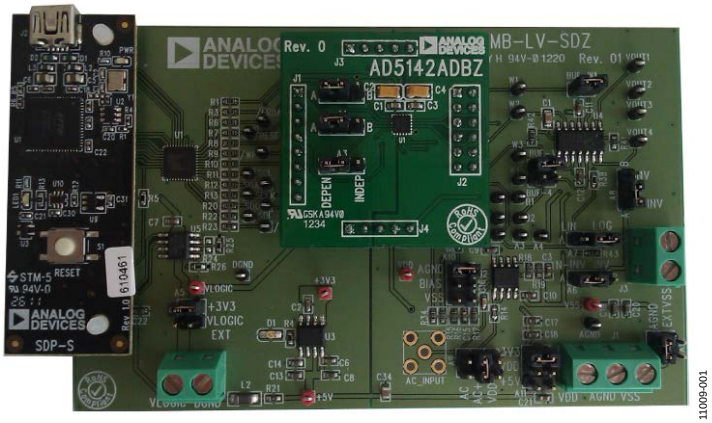


*Figure 1. Digital Picture of Evaluation Board with Low Voltage DigiPOT Motherboard and System Demonstration Platform*

# TABLE OF CONTENTS

Features ... 1
Package Contents ... 1
General Description ... 1
EVAL-AD5142ADBZ with Motherboard and SDP-S ... 1
Revision History ... 2
Evaluation Board Hardware ... 3
Power Supplies ... 3
Test Circuits ... 4
Evaluation Board Software ... 8
Installing the Software ... 8
Software Operation ... 10
Evaluation Board Schematics and Artwork ... 11
Motherboard ... 11
Daughter Board ... 15
Ordering Information ... 18
Bill of Materials ... 18

## REVISION HISTORY

**11/12—Revision 0: Initial Version**

# EVALUATION BOARD HARDWARE

## POWER SUPPLIES

The EVAL-MB-LV-SDZ motherboard supports using single and dual power supplies.

The EVAL-AD5142ADBZ evaluation board can be powered either from the SDP port or externally by the J1 and J2 connectors, as described in Table 1.

All supplies are decoupled to ground using 10 µF tantalum and 0.1 µF ceramic capacitors.

**Table 1. Maximum and Minimum Voltages of the Connectors**

| Connector No. | Label | Voltage |
|---|---|---|
| J1-1 | VDD | Analog positive power supply, $V_{DD}$.<br>Single supply from 2.3 V to 5.5 V.<br>Dual supply from 2.25 V to 2.75 V. |
| J1-2 | AGND | Analog ground. |
| J1-3 | VSS | Analog negative power supply, $V_{SS}$.<br>Dual supply from −2.25 V to −2.75 V. |
| J2-1 | VLOGIC | Digital supply, from 1.8 V to $V_{DD}$. |
| J2-2 | DGND | Digital ground. |

### *Link Options*

Several link and switch options are incorporated in the EVAL-MB-LV-SDZ motherboard and should be set up before using the board. Table 2 describes the positions of the links to control the evaluation board via the SDP board using a PC. The functions of these link options are described in detail in Table 4 through Table 7.

**Table 2. Link Options Setup for SDP Control (Default)**

| Link No. | Option |
|---|---|
| A5 | +3V3 |
| A11 | 3.3 V |
| A12 | AGND |

### *Linear Gain Setting Mode*

The linear gain setting mode pin is controlled directly by Jumper A1. If the jumper is placed in DEPEN, the AD5142A powers up in potentiometer mode, and the linear gain setting mode can be controlled by software. If the jumper is placed in INDEP, the part powers up in linear gain setting mode, loading independent values for each resistor string—$R_{AW1}$, $R_{WB1}$, $R_{AW2}$, and $R_{WB2}$. The part cannot be placed in potentiometer mode again unless the jumper is manually placed in DEPEN.

### *I²C Address Selection*

The I²C address can be selected by using Link A1 and Link A2 as described in Table 3.

**Table 3. I²C Address Selection**

| Link A1 | Link A2 | I²C Address |
|---|---|---|
| Position A | Position A | 0101111 |
| | Position B | 0100011 |
| Position B | Position A | 0101100 |
| | Position B | 0100000 |

**Table 4. Link Functions**

| Link No. | Power Supply | Options |
|---|---|---|
| A5 | $V_{LOGIC}$ | This link selects one of the following as the digital supply:<br>+3V3 (3.3 V from SDP).<br>VLOGIC EXT (external supply from the J2 connector). |
| A11 | $V_{DD}$ | This link selects one of the following as the positive power supply:<br>+5 V (5 V from SDP).<br>3V3 (3.3 V from SDP).<br>VDD (external supply from the J1 connector). |
| A12 | $V_{SS}$ | This link selects one of the following as the negative power supply:<br>AGND.<br>EXTVSS (external supply from the J1 connector). |

## TEST CIRCUITS

The EVAL-AD5142ADBZ and EVAL-MB-LV-SDZ incorporate several test circuits to evaluate the performance of the AD5142A.

### *DAC*

The digiPOT can be operated as a digital-to-analog converter (DAC), as shown in Figure 2. Table 5 describes the options available for the voltage references.

The output voltage is defined in Equation 1.

$$V_{OUT} = (V_A - V_B) \times \frac{RDAC1}{256} \quad (1)$$

where:
*RDAC1* is the code loaded in the RDAC1 register.
$V_A$ is the voltage applied to the A terminal (A9 link).
$V_B$ is the voltage applied to the B terminal (A10 link).

However, by using the R34 and R35 external resistors, the user can reduce the voltage of the voltage references. In this case, use the A1 and B1 test points to measure the voltage applied to the A and B terminals and to recalculate $V_A$ and $V_B$ in Equation 1.

**Table 5. DAC Voltage References**

| Terminal | Link | Options | Description |
|---|---|---|---|
| A1 | A9 | AC+ | Connects Terminal A1 to $V_{DD}/2$ |
| | | VDD | Connects Terminal A1 to $V_{DD}$ |
| W1 | BUF-W1 | | Connects Terminal W1 to an output buffer |
| B1 | A10 | BIAS | Connects Terminal B1 to $V_{DD}/2$ |
| | | VSS | Connects Terminal B1 to $V_{SS}$ |
| | | AGND | Connects Terminal B1 to analog ground |

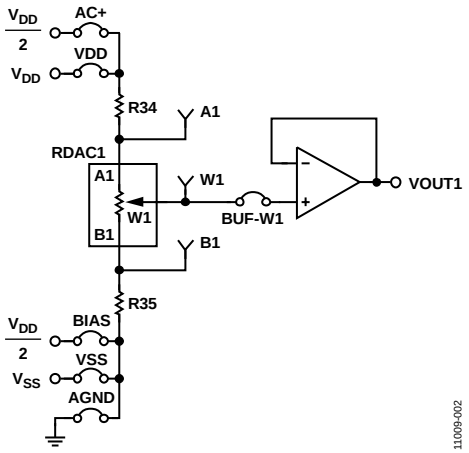


*Figure 2. DAC*

### *AC Signal Attenuation*

The RDAC can be used to attenuate an ac signal, which must be provided externally using the AC_INPUT connector, as shown in Figure 3.

Depending on the voltage supply rails and the dc offset voltage of the ac signal, various configurations can be used as described in Table 6.

The signal attenuation is defined in Equation 2.

$$Attenuation\,(\text{dB}) = 20 \times \log\left(\frac{R_{WB1} + R_W}{R_{AB}}\right) \quad (2)$$

where:
$R_W$ is the wiper resistance.
$R_{AB}$ is the end-to-end resistance value.
$R_{WB1}$ is the resistor between the W1 and B1 terminals.

**Table 6. AC Signal Attenuation Link Options**

| Voltage Supply | Maximum AC Signal Amplitude | Link | Options | Conditions |
|---|---|---|---|---|
| Single | $V_{DD}$ | A9 | AC+ | No dc offset voltage; the ac signal is outside the voltage supply rails due to the dc offset voltage; or the dc offset voltage ≠ $V_{DD}/2$.[1] |
| | | | AC | All other conditions. |
| | | A10 | BIAS | Use in conjunction with the AC+ link. |
| | | | GND | All other conditions. |
| Dual | $V_{DD}/V_{SS}$ | A9 | AC+ | The ac signal is outside the voltage supply rails due to the dc offset voltage; the dc offset voltage ≠ 0 V.[1] |
| | | | AC | All other conditions. |
| | | A10 | GND | Use in conjunction with the AC+ link. |
| | | | VSS | All other conditions. |

[1] Recommended to ensure optimal total harmonic distortion (THD) performance.

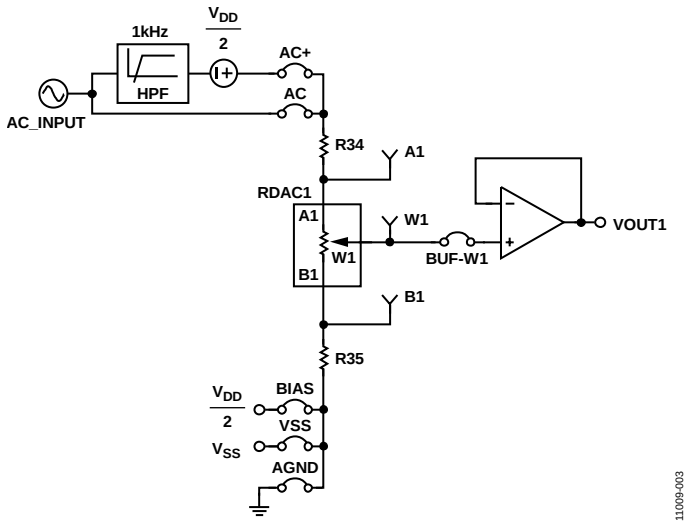


*Figure 3. AC Signal Attenuator*

### *Signal Amplifier*

The RDAC can be operated as an inverting or noninverting signal amplifier supporting linear or pseudologarithmic gains. Table 7 shows the available configurations.

The noninverting amplifier with linear gain is shown in Figure 4, and the gain is defined in Equation 3.

$$G = 1 + \frac{R_{WB2}}{R_{AW2}} \quad (3)$$

where:
$R_{WB2}$ is the code loaded for the $R_{WB2}$ resistance.
$R_{AW2}$ is the code loaded for the $R_{AW2}$ resistance.

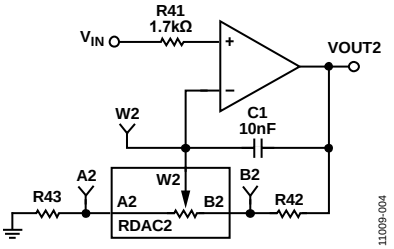


*Figure 4. Linear Noninverting Amplifier*

R43 and R42 can be used to set the maximum and minimum gain limits.

The noninverting amplifier with pseudologarithmic gain is shown in Figure 5, and the gain is defined in Equation 4.

$$G = 1 + \frac{RDAC2}{256 - RDAC2} \quad (4)$$

where:
*RDAC2* is the code loaded in the RDAC2.

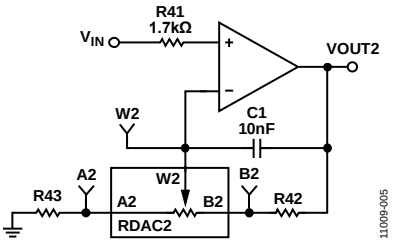


*Figure 5. Pseudologarithmic Noninverting Amplifier*

R43 and R42 can be used to set the maximum and minimum gain limits.

The inverting amplifier with linear gain is shown in Figure 6, and the gain is defined in Equation 5.

Note that the input signal, $V_{IN}$, must be negative.

$$G = -\frac{R_{WB2}}{R_{AW2}} \quad (5)$$

where:
$R_{WB2}$ is the code loaded for the $R_{WB2}$ resistance.
$R_{AW2}$ is the code loaded for the $R_{AW2}$ resistance.

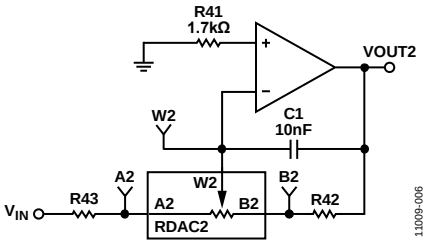


*Figure 6. Linear Inverting Amplifier*

R43 and R42 can be used to set the maximum and minimum gain limits.

The inverting amplifier with pseudologarithmic gain is shown in Figure 7, and the gain is defined in Equation 6.

$$G = -\frac{RDAC2}{256 - RDAC2} \quad (6)$$

where:
*RDAC2* is the code loaded in the RDAC2.

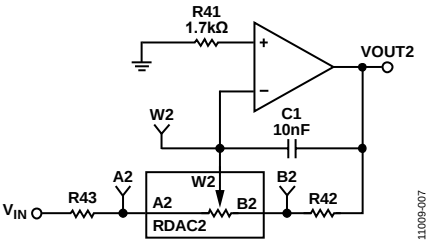


*Figure 7. Pseudologarithmic Inverting Amplifier*

R43 and R42 can be used to set the maximum and minimum gain limits.

**Table 7. Amplifier Selection Link Options**

| Amplifier | Gain | Linear Setting Gain Mode Enabled | Link | Label |
|---|---|---|---|---|
| Noninverting | Linear | Yes | A7<br>A6<br>A8 | LIN<br>N-INV<br>N-INV |
| | Pseudologarithmic | No | A7<br>A6<br>A8 | LOG<br>N-INV<br>N-INV |
| Inverting | Linear | Yes | A7<br>A6<br>A8 | LIN<br>INV<br>INV |
| | Pseudologarithmic | No | A7<br>A6<br>A8 | LOG<br>INV<br>INV |

# EVALUATION BOARD SOFTWARE

## INSTALLING THE SOFTWARE

The EVAL-AD5142ADBZ kit includes a CD containing the evaluation board software. The software is compatible with Windows® XP, Windows Vista, and Windows 7 (both 32 bits and 64 bits).

Install the software before connecting the SDP board to the USB port of the PC to ensure that the SDP board is recognized when it is connected to the PC.

To install the software,

1. Start the Windows operating system and insert the CD into the CD-ROM drive.
2. The installation software opens automatically. If it does not open automatically, run the **setup.exe** file from the CD.
3. After the installation is complete, power up the evaluation board as described in the Power Supplies section.
4. Connect the EVAL-AD5142ADBZ and EVAL-MB-LV-SDZ to the SDP board, and then connect the SDP board to the PC using the USB cable included with the SDP board.
5. When the software detects the evaluation board, follow the instructions that appear to finalize the installation.

To run the program, do the following:

1. Click **Start** > **All Programs** > **Analog Devices** > **AD5142A** > **AD5142A Eval Board**. To uninstall the program, click **Start** > **Control Panel** > **Add or Remove Programs** > **AD5142A Eval Board**.
2. If the SDP board is not connected to the USB port when the software is launched, a connectivity error displays (see Figure 8). Simply connect the evaluation board to the USB port of the PC, wait a few seconds, click **Rescan**, and follow the instructions.

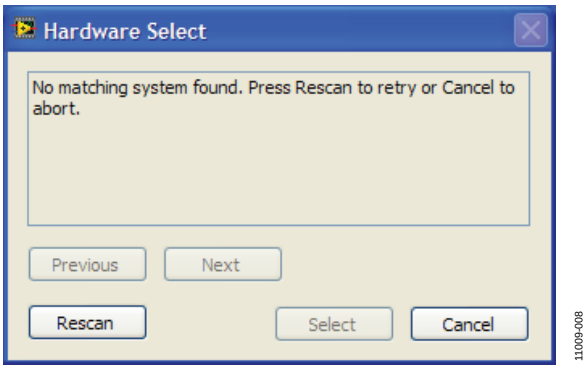


*Figure 8. Pop-Up Window Error*

The main window of the EVAL-AD5142ADBZ software then opens, as shown in Figure 9.

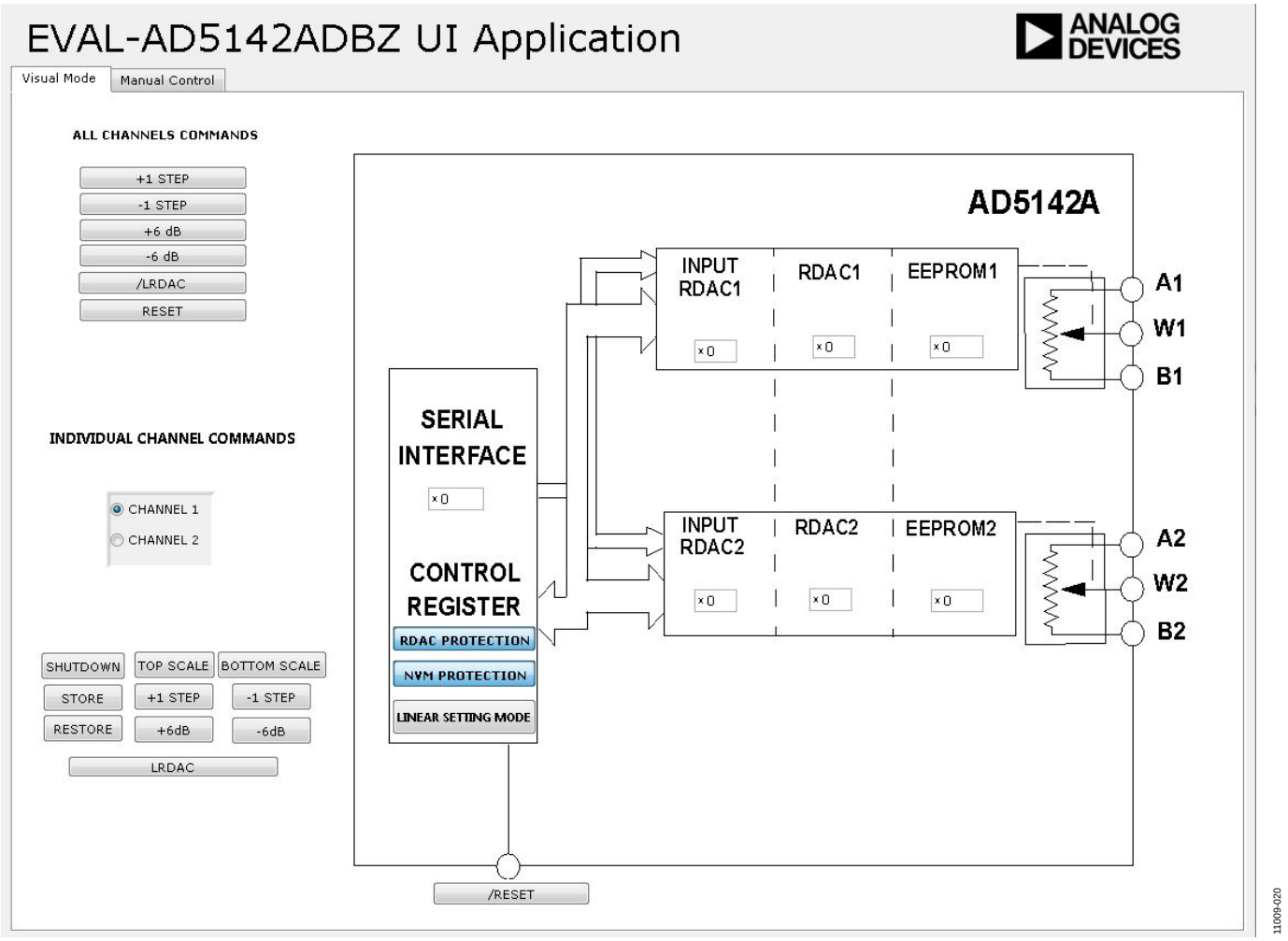


*Figure 9. EVAL-AD5142ADBZ Software Main Window*

## SOFTWARE OPERATION

The main window of the EVAL-AD5142ADBZ software has two tabs, **Visual Mode** and **Manual Control**.

### *Visual Mode*

The **Visual Mode** tab is divided into the following sections: **ALL CHANNELS COMMANDS**, **INDIVIDUAL CHANNEL COMMANDS**, and a block diagram that contains boxes for changing the control register values and buttons and for controlling the hardware pins.

The **ALL CHANNELS COMMANDS** section allows you to send quick commands directly to the AD5142A.

The **INDIVIDUAL CHANNEL COMMANDS** section allows you to send quick commands to only specific channels of the AD5142A.

The block diagram allows you to update the control register status. Each register value can be easily updated by changing the value in its respective block within the diagram. In addition, buttons are available that allow you to change the level of some hardware pins.

### *Manual Mode*

The **Manual Mode** tab, as shown in Figure 10, allows you to customize an I²C data-word by manually switching the scroll bars from 0 to 1 or from 1 to 0, as desired, and then clicking **SEND DATA**.

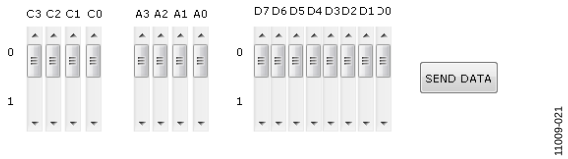


*Figure 10. Manual Mode*

# EVALUATION BOARD SCHEMATICS AND ARTWORK

## MOTHERBOARD

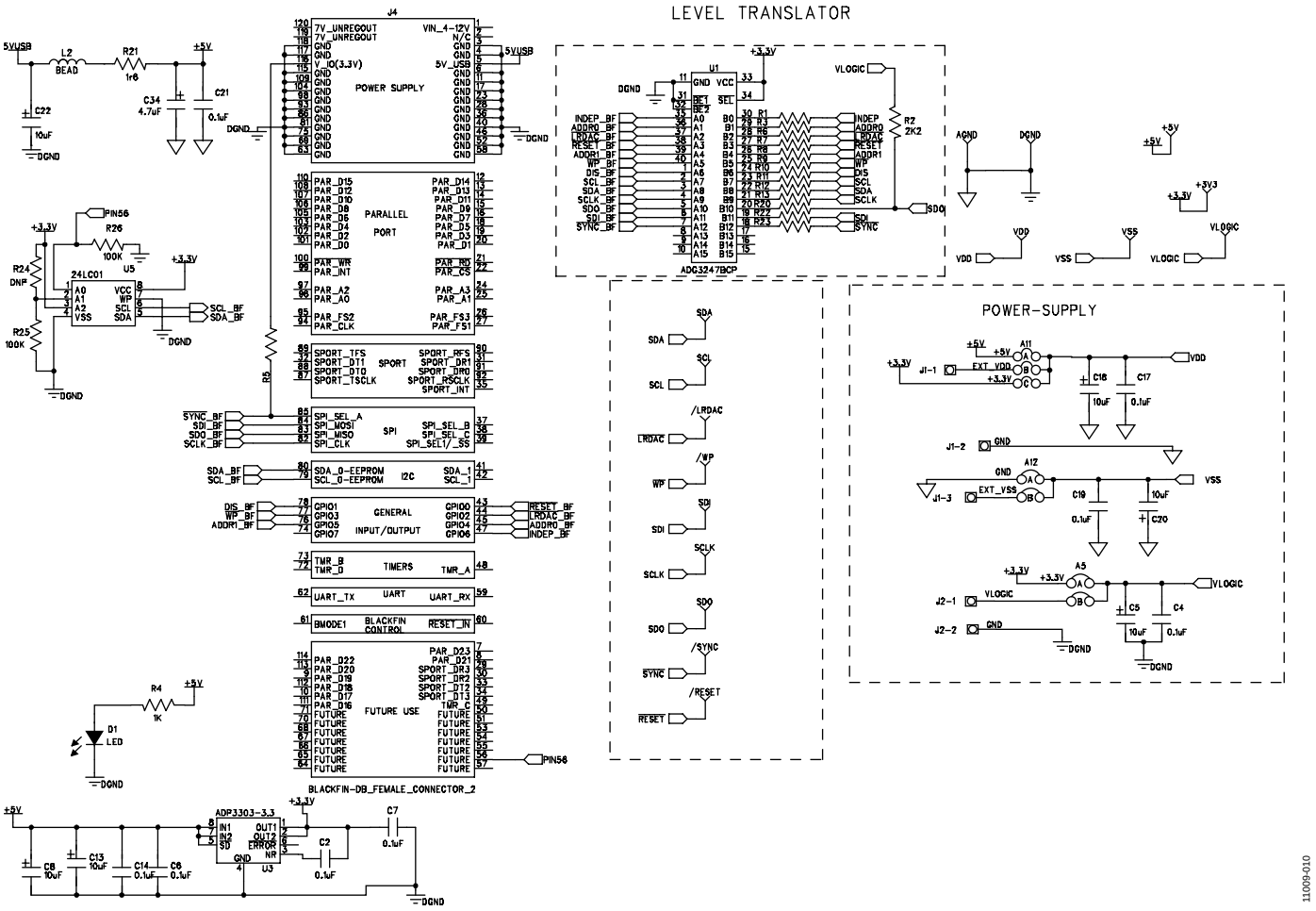


*Figure 11. SDP Connector and Power Supply*

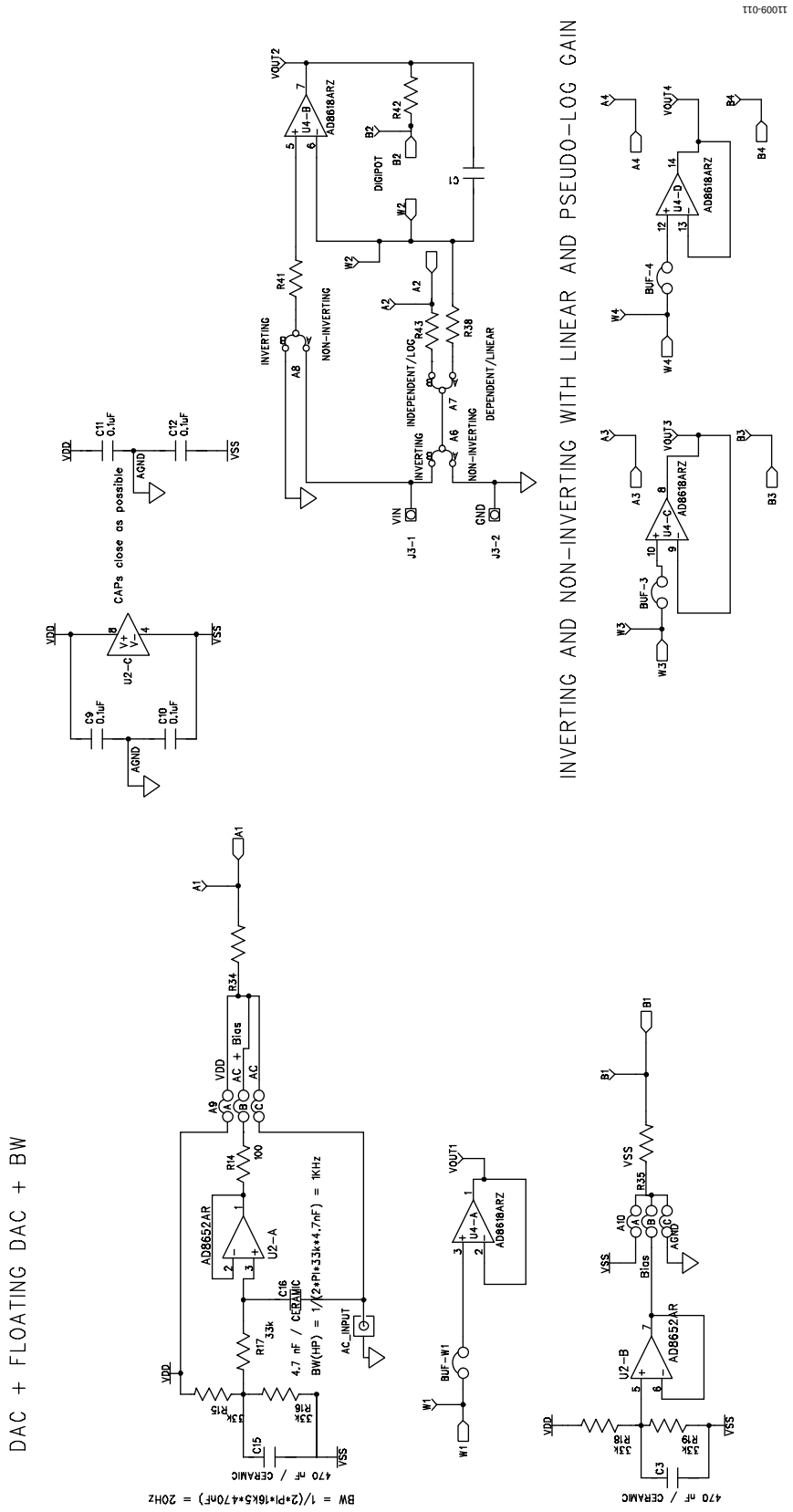


*Figure 12. Schematic of Test Circuits*

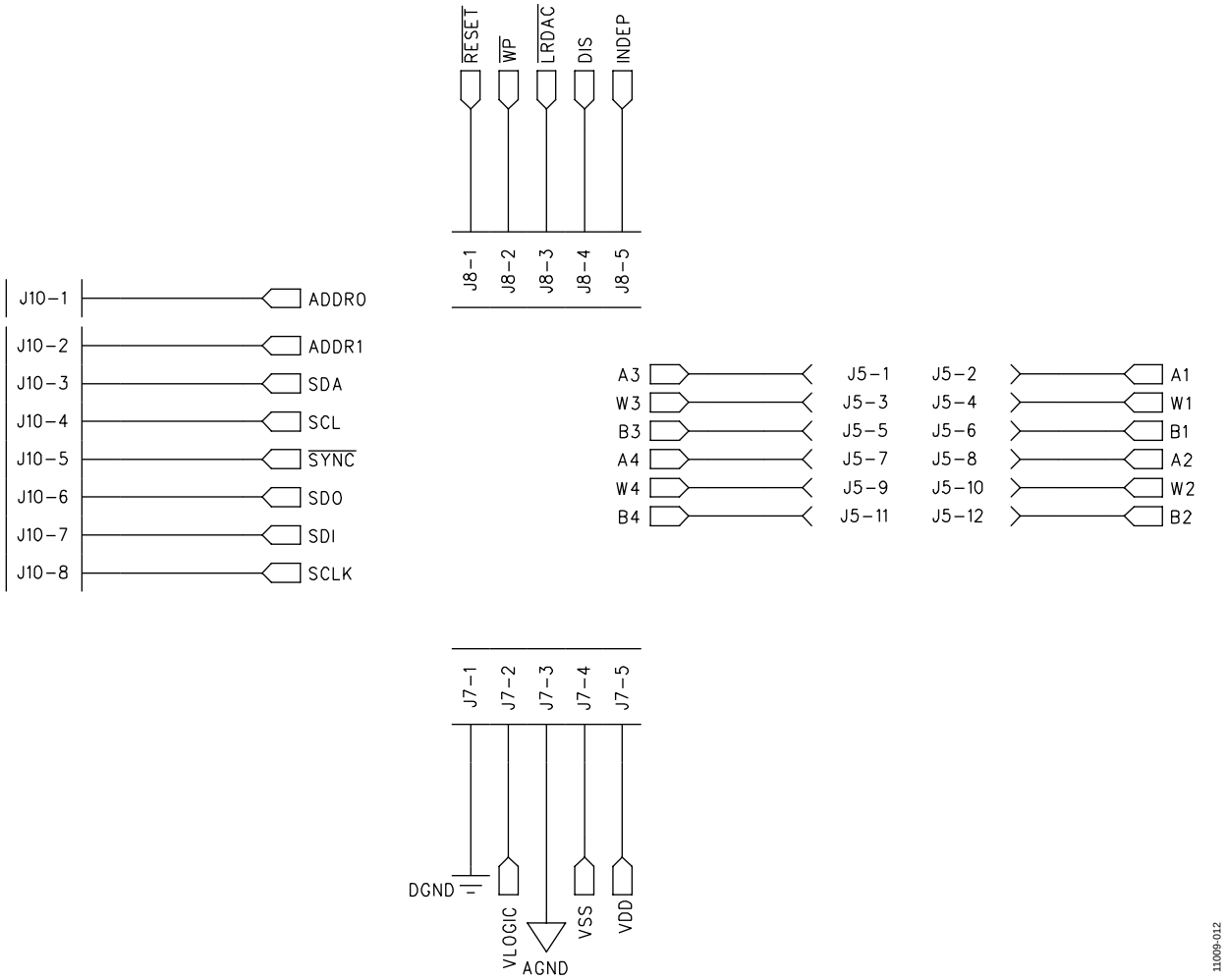


*Figure 13. Schematic of Connectors to Daughter Board*

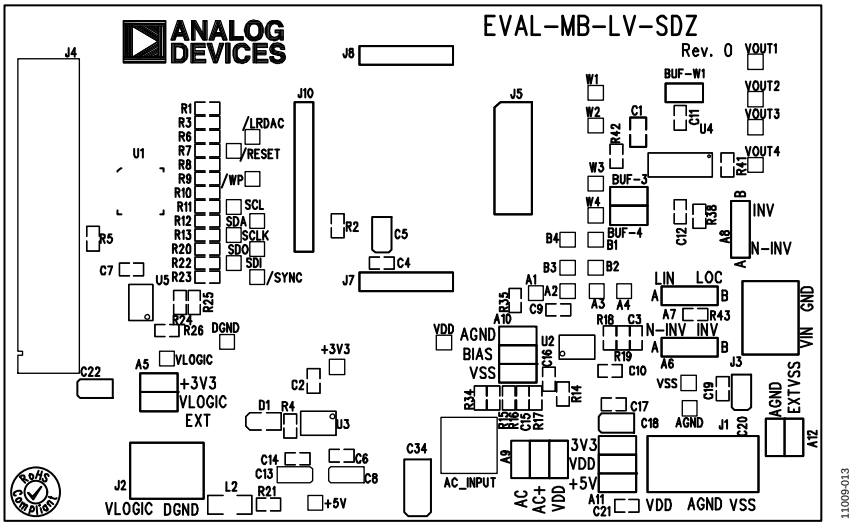


*Figure 14. Component Side View of Motherboard*

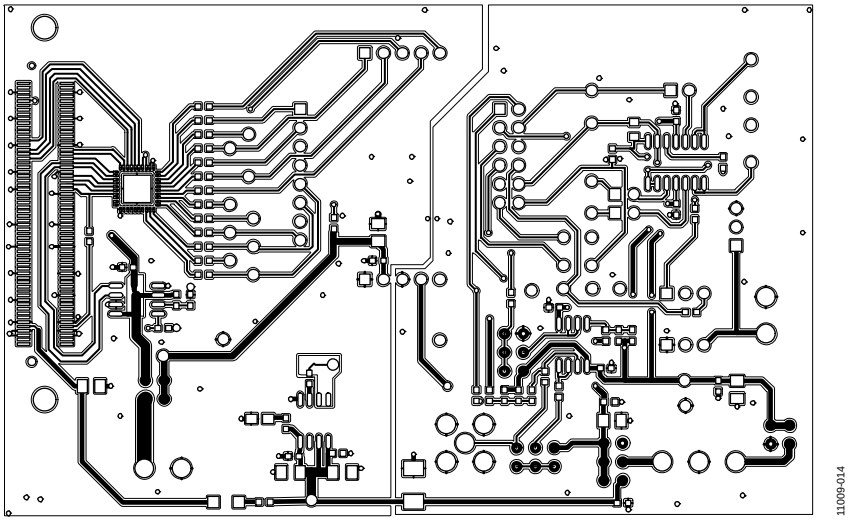


*Figure 15. Component Placement Drawing of Motherboard*

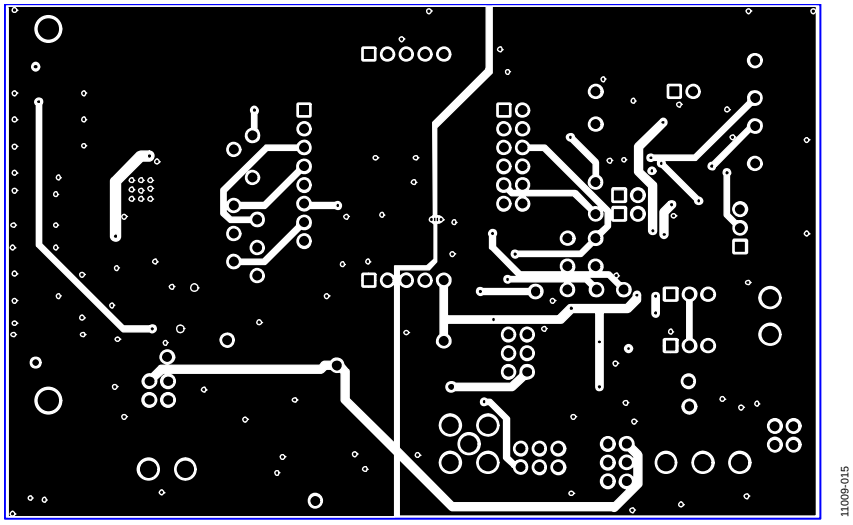


*Figure 16. Layer 2 Side PCB Drawing of Motherboard*

## DAUGHTER BOARD

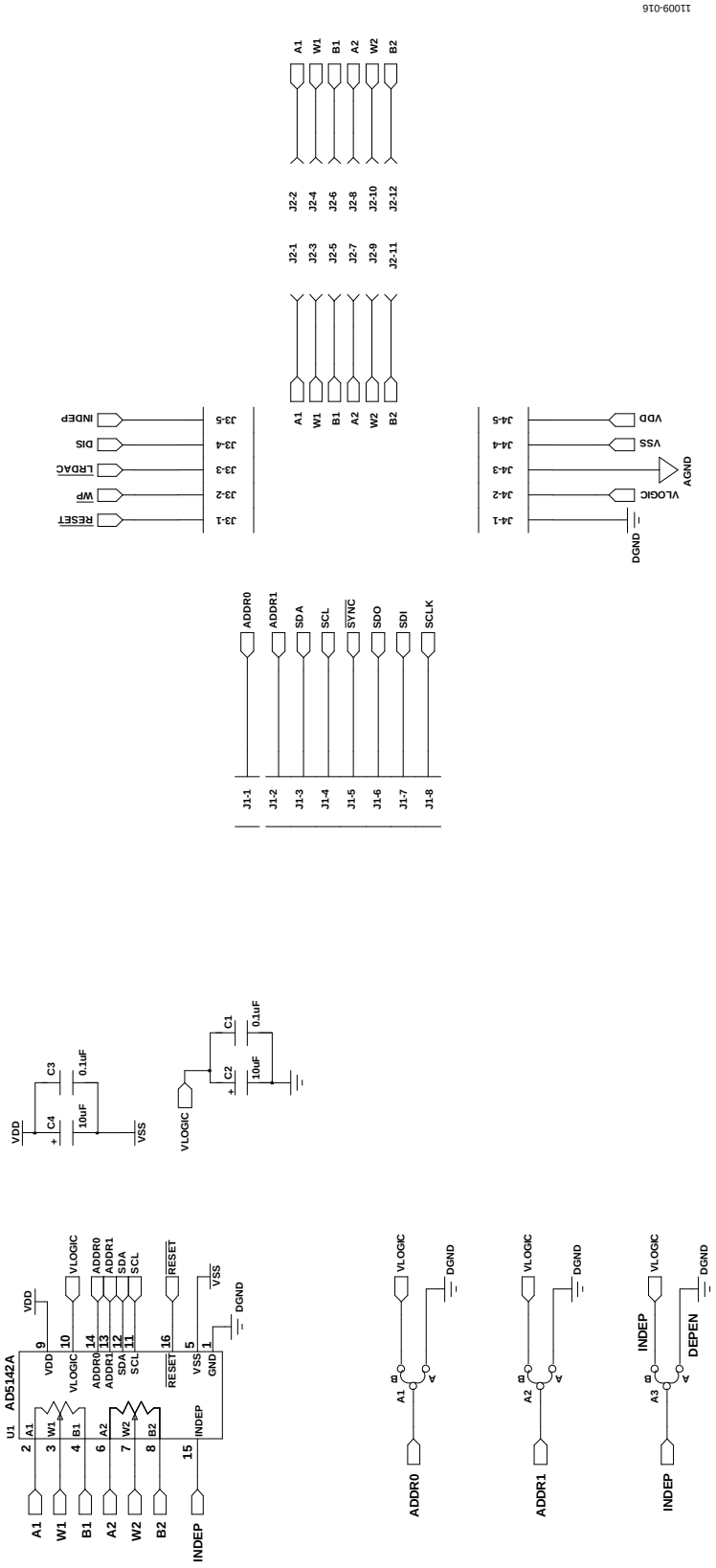


*Figure 17. Schematic of Daughter Board*

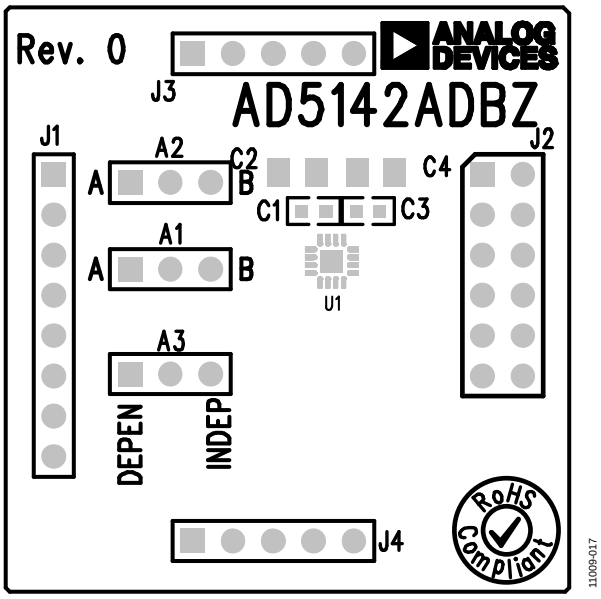


*Figure 18. Component Side View of Daughter Board*

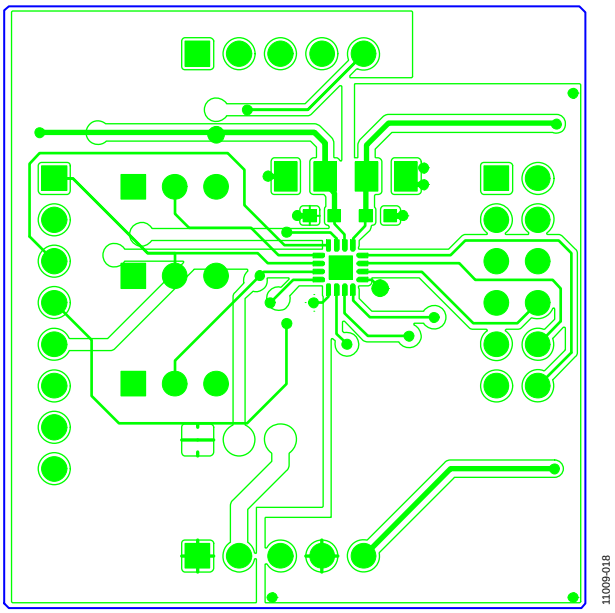


*Figure 19. Component Placement Drawing of Daughter Board*

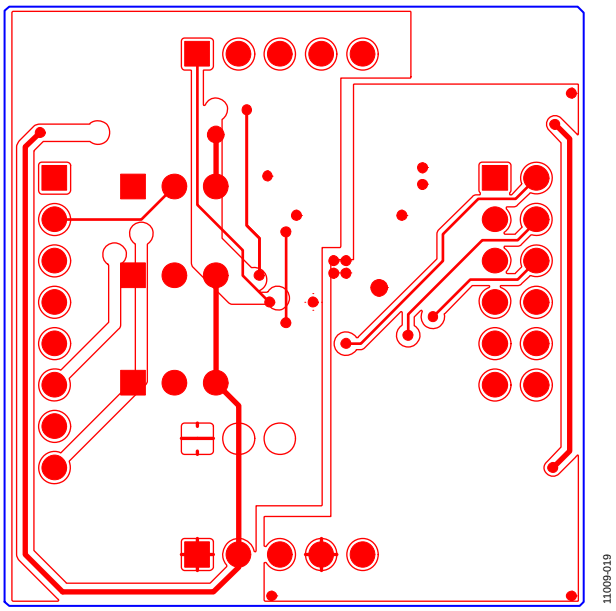


*Figure 20. Layer 2 Side PCB Drawing of Daughter Board*

# ORDERING INFORMATION

## BILL OF MATERIALS

**Table 8. Motherboard**

| Qty | Reference Designator | Description | Supplier[1]/Part Number |
|---|---|---|---|
| 3 | BUF-3, BUF-4, BUF-W1 | 2-pin (0.1" pitch) header and shorting shunt | FEC 1022247 and 150411 |
| 3 | A6, A7, A8 | 3-pin SIL header and shorting link | FEC 1022248 and 150410 |
| 5 | A5, A9, A10, A11, A12 | 6-pin (3 × 2), 0.1" header and shorting block | FEC 672014 and 150411 (36-pin strip) |
| 1 | J1 | 3-pin terminal block (5 mm pitch) | FEC 151790 |
| 2 | J7, J8 | 4-pin SIL header | FEC 1098035 |
| 1 | J4 | Receptacle, 0.6 mm, 120-way | Digi-Key H1219-ND |
| 1 | J10 | 8-pin in-line header; 100 mil centers | FEC 1098038 |
| 1 | J5 | 12-pin (2 × 6), 0.1" pitch header | FEC 1098051 |
| 2 | J2, J3 | 2-pin terminal block (5 mm pitch) | FEC 151789 |
| 17 | R1, R3, R6, R7, R8, R9, R10, R11, R12, R13, R20, R22, R23, R34, R35, R42, R43 | SMD resistor, 0 Ω, 0.01, 0603 | FEC 9331662 |
| 1 | R2 | SMD resistor, 2.2 kΩ, 0.01, 0603 | FEC 1750676 |
| 1 | R41 | SMD resistor, 1.7 kΩ, 1% ,0603 | FEC 1170811 |
| 1 | R21 | Resistor, surge, 1.6 Ω, 1%, 0603 | FEC 1627674 |
| 1 | R38 | SMD resistor, 2.7 kΩ, 1%, 0603 | FEC 1750678 |
| 1 | R14 | SMD resistor, 100 Ω, 1%, 0603 | FEC 9330364 |
| 1 | R4 | SMD resistor, 1 kΩ, 0.01, 0603 | FEC 9330380 |
| 3 | R5, R25, R26 | SMD resistor, 100 kΩ, 1%, 0603 | FEC 9330402 |
| 5 | R15, R16, R17, R18, R19 | SMD resistor, 33 kΩ, 1%, 0603 | FEC 9331034 |
| 1 | C1 | SMD capacitor, 100 nF, 10%, 0805 | FEC 1650863 |
| 8 | C4, C9, C10, C11, C12, C17, C19, C21 | SMD capacitor, 0.1 µF, ±10%, 0603 | FEC 1759122 |
| 4 | C2, C6, C7, C14 | SMD capacitor, 0.1 µF, ±10%, 0603 | FEC 3019482 |
| 2 | C8, C13 | SMD capacitor, 10 µF, ±10% | FEC 197130 |
| 4 | C18, C20, C22, C5 | Capacitor, 10 µF, ±20% | FEC 1190107 |
| 2 | C3, C15 | Capacitor, 470 nF, ±10%, 0603 | FEC 1414037 |
| 1 | C16 | Capacitor, 4.7 nF, ±10%, 0603 | FEC 1414642 |
| 1 | C34 | Capacitor, 4.7 nF, ±20% | FEC 1432350 |
| 1 | L2 | Inductor, SMD, 600Z | FEC 9526862 |
| 1 | D1 | Green SMD LED | FEC 5790852 |
| 1 | U1 | Two-port level translating bus switch | ADG3247BCPZ |
| 1 | U2 | Dual op amp | AD8652ARZ |
| 1 | U3 | Precision low dropout voltage regulator | ADP3303ARZ-3.3 |
| 1 | U4 | Operational amplifier | AD8618ARZ |
| 1 | U5 | $I^2C$ serial EEPROM 64k 2.5 V MSOP-8 | FEC 1331335 |
| 18 | $\overline{\text{LRDAC}}$, $\overline{\text{RESET}}$, $\overline{\text{SYNC}}$, $\overline{\text{WP}}$, A1, A2, A3, A4, AGND, B1, VOUT_C1, VOUT_C2, VOUT3, VOUT4, W1, W2, W3, W4 | Terminal, PCB, black, PK100, test point | FEC 8731128 |
| 5 | +3.3V , +5V, EXT_VDD, VLOGIC, EXT_VSS | Terminal, PCB, red, PK100, test point | FEC 8731144 |

[1] FEC refers to Farnell Electronic Component Distributors; Digi-Key refers to Digi-Key Corporation.

**Table 9. Daughter Board**

| Qty | Reference Designator | Description | Supplier[1]/Part Number |
|---|---|---|---|
| 1 | U1 | 256-position digital potentiometer | AD5142ABCPZ10 |
| 3 | A1, A2, A3 | 3-pin SIL header and shorting link | FEC 1022248 and 150410 |
| 2 | C2, C4 | 6.3 V tantalum capacitor (Case A), 10 µF, ±20% | FEC 1190107 |
| 2 | C1, C3 | 50 V, X7R ceramic capacitor, 0.1 µF, ±10% | FEC 1759122 |
| 1 | J1 | Header, 2.54 mm, PCB, 1 × 8-way | FEC 1766172 |
| 1 | J2 | 12-pin (2 × 6), 0.1" pitch header | FEC 1804099 |
| 2 | J3, J4 | 5-pin SIL header | FEC 1929016 |

[1] FEC refers to Farnell Electronic Component Distributors.

# NOTES

I²C refers to a communications protocol originally developed by Philips Semiconductors (now NXP Semiconductors).

**ESD Caution**

**ESD (electrostatic discharge) sensitive device**. Charged devices and circuit boards can discharge without detection. Although this product features patented or proprietary protection circuitry, damage may occur on devices subjected to high energy ESD. Therefore, proper ESD precautions should be taken to avoid performance degradation or loss of functionality.

**Legal Terms and Conditions**

By using the evaluation board discussed herein (together with any tools, components documentation or support materials, the "Evaluation Board"), you are agreeing to be bound by the terms and conditions set forth below ("Agreement") unless you have purchased the Evaluation Board, in which case the Analog Devices Standard Terms and Conditions of Sale shall govern. Do not use the Evaluation Board until you have read and agreed to the Agreement. Your use of the Evaluation Board shall signify your acceptance of the Agreement. This Agreement is made by and between you ("Customer") and Analog Devices, Inc. ("ADI"), with its principal place of business at One Technology Way, Norwood, MA 02062, USA. Subject to the terms and conditions of the Agreement, ADI hereby grants to Customer a free, limited, personal, temporary, non-exclusive, non-sublicensable, non-transferable license to use the Evaluation Board FOR EVALUATION PURPOSES ONLY. Customer understands and agrees that the Evaluation Board is provided for the sole and exclusive purpose referenced above, and agrees not to use the Evaluation Board for any other purpose. Furthermore, the license granted is expressly made subject to the following additional limitations: Customer shall not (i) rent, lease, display, sell, transfer, assign, sublicense, or distribute the Evaluation Board; and (ii) permit any Third Party to access the Evaluation Board. As used herein, the term "Third Party" includes any entity other than ADI, Customer, their employees, affiliates and in-house consultants. The Evaluation Board is NOT sold to Customer; all rights not expressly granted herein, including ownership of the Evaluation Board, are reserved by ADI. CONFIDENTIALITY. This Agreement and the Evaluation Board shall all be considered the confidential and proprietary information of ADI. Customer may not disclose or transfer any portion of the Evaluation Board to any other party for any reason. Upon discontinuation of use of the Evaluation Board or termination of this Agreement, Customer agrees to promptly return the Evaluation Board to ADI. ADDITIONAL RESTRICTIONS. Customer may not disassemble, decompile or reverse engineer chips on the Evaluation Board. Customer shall inform ADI of any occurred damages or any modifications or alterations it makes to the Evaluation Board, including but not limited to soldering or any other activity that affects the material content of the Evaluation Board. Modifications to the Evaluation Board must comply with applicable law, including but not limited to the RoHS Directive. TERMINATION. ADI may terminate this Agreement at any time upon giving written notice to Customer. Customer agrees to return to ADI the Evaluation Board at that time. LIMITATION OF LIABILITY. THE EVALUATION BOARD PROVIDED HEREUNDER IS PROVIDED "AS IS" AND ADI MAKES NO WARRANTIES OR REPRESENTATIONS OF ANY KIND WITH RESPECT TO IT. ADI SPECIFICALLY DISCLAIMS ANY REPRESENTATIONS, ENDORSEMENTS, GUARANTEES, OR WARRANTIES, EXPRESS OR IMPLIED, RELATED TO THE EVALUATION BOARD INCLUDING, BUT NOT LIMITED TO, THE IMPLIED WARRANTY OF MERCHANTABILITY, TITLE, FITNESS FOR A PARTICULAR PURPOSE OR NONINFRINGEMENT OF INTELLECTUAL PROPERTY RIGHTS. IN NO EVENT WILL ADI AND ITS LICENSORS BE LIABLE FOR ANY INCIDENTAL, SPECIAL, INDIRECT, OR CONSEQUENTIAL DAMAGES RESULTING FROM CUSTOMER'S POSSESSION OR USE OF THE EVALUATION BOARD, INCLUDING BUT NOT LIMITED TO LOST PROFITS, DELAY COSTS, LABOR COSTS OR LOSS OF GOODWILL. ADI'S TOTAL LIABILITY FROM ANY AND ALL CAUSES SHALL BE LIMITED TO THE AMOUNT OF ONE HUNDRED US DOLLARS ($100.00). EXPORT. Customer agrees that it will not directly or indirectly export the Evaluation Board to another country, and that it will comply with all applicable United States federal laws and regulations relating to exports. GOVERNING LAW. This Agreement shall be governed by and construed in accordance with the substantive laws of the Commonwealth of Massachusetts (excluding conflict of law rules). Any legal action regarding this Agreement will be heard in the state or federal courts having jurisdiction in Suffolk County, Massachusetts, and Customer hereby submits to the personal jurisdiction and venue of such courts. The United Nations Convention on Contracts for the International Sale of Goods shall not apply to this Agreement and is expressly disclaimed.

**©2012 Analog Devices, Inc. All rights reserved. Trademarks and registered trademarks are the property of their respective owners.**

**UG11009-0-11/12(0)**

ANALOG DEVICES

www.analog.com

Компания «ЭлектроПласт» предлагает заключение долгосрочных отношений при поставках импортных электронных компонентов на взаимовыгодных условиях!

Наши преимущества:

- Оперативные поставки широкого спектра электронных компонентов отечественного и импортного производства напрямую от производителей и с крупнейших мировых складов;
- Поставка более 17-ти миллионов наименований электронных компонентов;
- Поставка сложных, дефицитных, либо снятых с производства позиций;
- Оперативные сроки поставки под заказ (от 5 рабочих дней);
- Экспресс доставка в любую точку России;
- Техническая поддержка проекта, помощь в подборе аналогов, поставка прототипов;
- Система менеджмента качества сертифицирована по Международному стандарту ISO 9001;
- Лицензия ФСБ на осуществление работ с использованием сведений, составляющих государственную тайну;
- Поставка специализированных компонентов (Xilinx, Altera, Analog Devices, Intersil, Interpoint, Microsemi, Aeroflex, Peregrine, Syfer, Eurofarad, Texas Instrument, Miteq, Cobham, E2V, MA-COM, Hittite, Mini-Circuits,General Dynamics и др.);

Помимо этого, одним из направлений компании «ЭлектроПласт» является направление «Источники питания». Мы предлагаем Вам помощь Конструкторского отдела:

- Подбор оптимального решения, техническое обоснование при выборе компонента;
- Подбор аналогов;
- Консультации по применению компонента;
- Поставка образцов и прототипов;
- Техническая поддержка проекта;
- Защита от снятия компонента с производства.

**Как с нами связаться**

**Телефон:** 8 (812) 309 58 32 (многоканальный)
**Факс:** 8 (812) 320-02-42
**Электронная почта:** org@eplast1.ru
**Адрес:** 198099, г. Санкт-Петербург, ул. Калинина, дом 2, корпус 4, литера А.