Features

- Fast Switching Speed
- Surface Mount Package Ideally Suited for Automated Insertion
- High Breakdown Voltage
- Low Leakage Current
- **Totally Lead-Free & Fully RoHS Compliant (Notes 1 & 2)**
- **Halogen and Antimony Free. “Green” Device (Note 3)**
- **Qualified to AEC-Q101 Standards for High Reliability**
- **PPAP Capable (Note 4)**

Mechanical Data

- Case: SOT323
- Case Material: Molded Plastic, "Green" Molding Compound. UL Flammability Classification Rating 94V-0
- Moisture Sensitivity: Level 1 per J-STD-020
- Terminal Connections: See Diagram
- Terminals: Solderable per MIL-STD-202, Method 208
- Lead-Free Plating (Matte Tin Finish Annealed over Alloy 42 Leadframe)
- Weight: 0.006 grams (Approximate)

SOT323

Top View

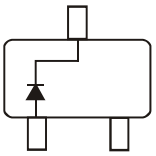

Top View
Internal Schematic

Ordering Information (Notes 4 & 5)

Part Number	Compliance	Case	Packaging
BAS21WQ-7-F	Automotive	SOT323	3000/Tape & Reel
BAS21WQ-13-F	Automotive	SOT323	10,000/Tape & Reel

Notes:
1. No purposely added lead. Fully EU Directive 2002/95/EC (RoHS), 2011/65/EU (RoHS 2) & 2015/863/EU (RoHS 3) compliant.
2. See https://www.diodes.com/quality/lead-free/ for more information about Diodes Incorporated’s definitions of Halogen- and Antimony-free, "Green" and Lead-free.
3. Halogen- and Antimony-free "Green” products are defined as those which contain <900ppm bromine, <900ppm chlorine (<1500ppm total Br + Cl) and <1000ppm antimony compounds.
4. Automotive products are AEC-Q101 qualified and are PPAP capable. Refer to https://www.diodes.com/quality/.
5. For packaging details, go to our website at http://www.diodes.com/products/packages.html.

Marking Information

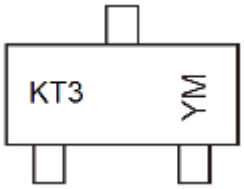

KT3 = Product Type Marking Code
YM = Date Code Marking
Y = Year, ex: F = 2018
M = Month, ex: 9 = September

Date Code Key

Year	2000	2001	…	2013	2014	2015	2016	2017	2018	2019	2020	2021	2022
Code	L	M	…	A	B	C	D	E	F	G	H	I	J

Month	Jan	Feb	Mar	Apr	May	Jun	Jul	Aug	Sep	Oct	Nov	Dec
Code	1	2	3	4	5	6	7	8	9	O	N	D

© Diodes Incorporated

Maximum Ratings (@T_A = +25°C, unless otherwise specified.)

Characteristic	Symbol	Value	Unit
Repetitive Peak Reverse Voltage	V_{RRM}	250	V
Working Peak Reverse Voltage DC Blocking Voltage	V_{RWM} V_R	200	V
RMS Reverse Voltage	$V_{R(RMS)}$	141	V
Forward Continuous Current (Note 6)	I_{FM}	400	mA
Average Rectified Output Current (Note 6)	I_O	200	mA
Non-Repetitive Peak Forward Surge Current @ t = 1.0µs @ t = 1.0s	I_{FSM}	2.5 0.5	A
Repetitive Peak Forward Surge Current	I_{FRM}	625	mA

Thermal Characteristics

Characteristic	Symbol	Value	Unit
Power Dissipation	P_D	200	mW
Thermal Resistance Junction to Ambient Air (Note 6)	$R_{\Theta JA}$	625	°C/W
Operating and Storage Temperature Range	T_J , T_{STG}	-65 to +150	°C

Electrical Characteristics (@T_A = +25°C, unless otherwise specified.)

Characteristic	Symbol	Min	Max	Unit	Test Condition
Reverse Breakdown Voltage (Note 7)	$V_{(BR)R}$	250	—	V	I_R = 100µA
Forward Voltage	V_F	—	1.0 1.25	V	I_F = 100mA I_F = 200mA
Reverse Current @ Rated DC Blocking Voltage (Note 7)	I_R	—	100 15	nA µA	T_J = +25°C T_J = +100°C
Total Capacitance	C_T	—	5.0	pF	V_R = 0, f = 1.0MHz
Reverse Recovery Time	t_{RR}	—	50	ns	$I_F = I_R$ = 30mA, $I_{RR} = 0.1 \times I_R$, R_L = 100Ω

Notes: 6. Part mounted on FR-4 PC board with recommended pad layout, which can be found on our website at http://www.diodes.com/package-outlines.html. I_{FM}, I_O are valid provided that terminals are kept at ambient temperature
7. Short duration pulse test used to minimize self-heating effect.

© Diodes Incorporated

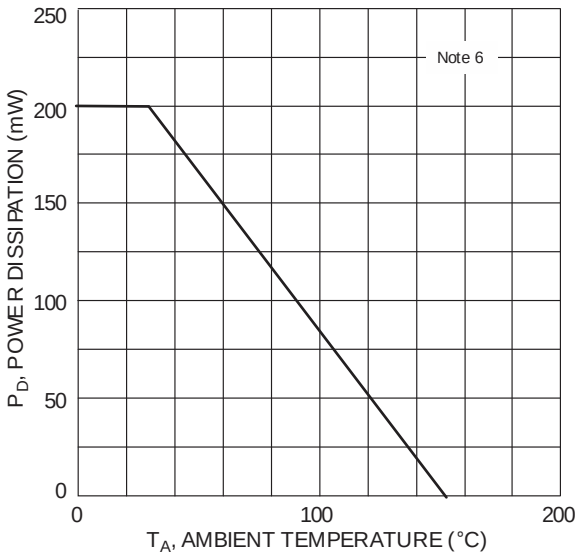

Fig. 1 Power Derating Curve

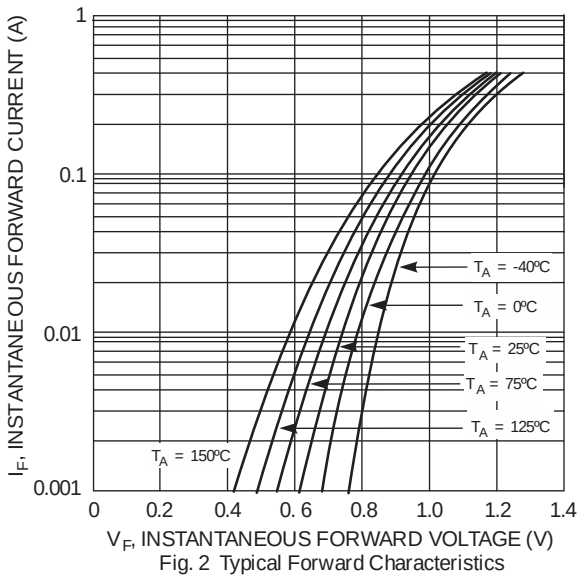

Fig. 2 Typical Forward Characteristics

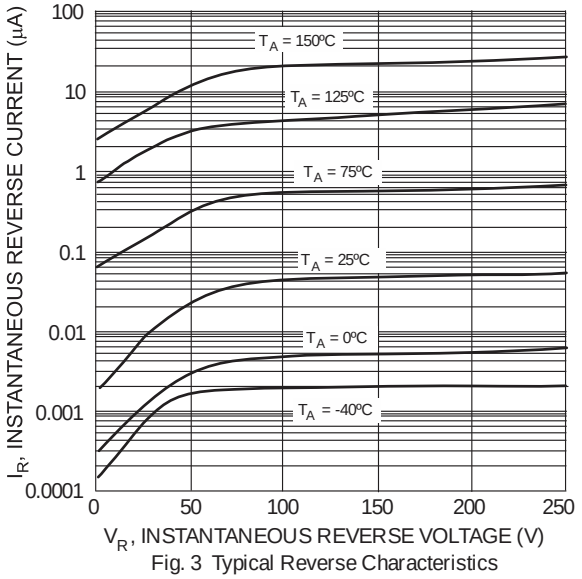

Fig. 3 Typical Reverse Characteristics

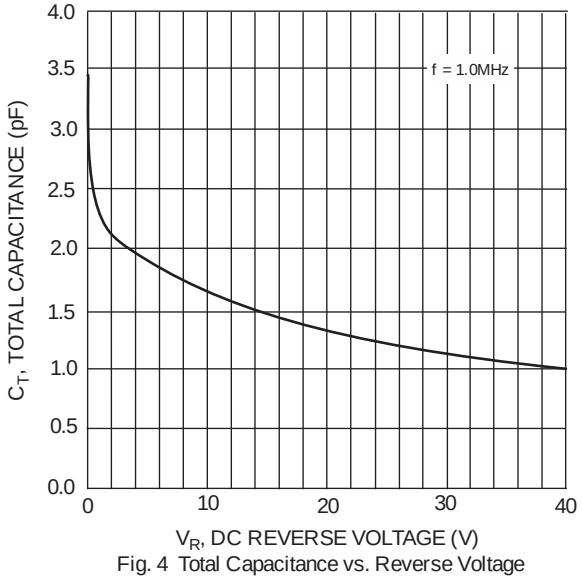

Fig. 4 Total Capacitance vs. Reverse Voltage

© Diodes Incorporated

Package Outline Dimensions

Please see http://www.diodes.com/package-outlines.html for the latest version.

SOT323

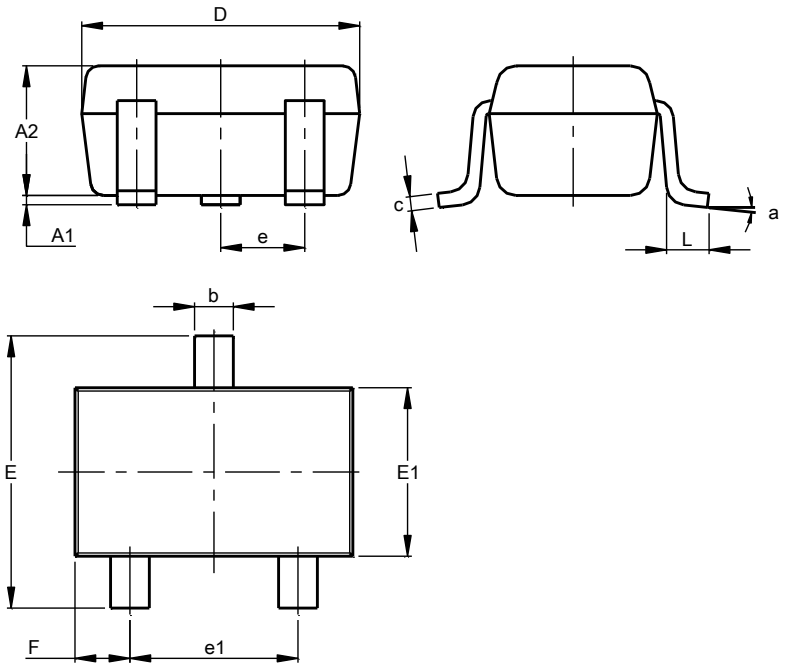

SOT323			
Dim	**Min**	**Max**	**Typ**
A1	0.00	0.10	0.05
A2	0.90	1.00	0.95
b	0.25	0.40	0.30
c	0.10	0.18	0.11
D	1.80	2.20	2.15
E	2.00	2.20	2.10
E1	1.15	1.35	1.30
e	0.650 BSC		
e1	1.20	1.40	1.30
F	0.375	0.475	0.425
L	0.25	0.40	0.30
a	0°	8°	--
All Dimensions in mm			

Suggested Pad Layout

Please see http://www.diodes.com/package-outlines.html for the latest version.

SOT323

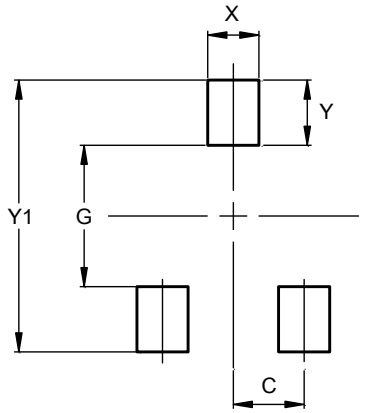

Dimensions	Value (in mm)
C	0.650
G	1.300
X	0.470
Y	0.600
Y1	2.500

© Diodes Incorporated

IMPORTANT NOTICE

DIODES INCORPORATED MAKES NO WARRANTY OF ANY KIND, EXPRESS OR IMPLIED, WITH REGARDS TO THIS DOCUMENT, INCLUDING, BUT NOT LIMITED TO, THE IMPLIED WARRANTIES OF MERCHANTABILITY AND FITNESS FOR A PARTICULAR PURPOSE (AND THEIR EQUIVALENTS UNDER THE LAWS OF ANY JURISDICTION).

Diodes Incorporated and its subsidiaries reserve the right to make modifications, enhancements, improvements, corrections or other changes without further notice to this document and any product described herein. Diodes Incorporated does not assume any liability arising out of the application or use of this document or any product described herein; neither does Diodes Incorporated convey any license under its patent or trademark rights, nor the rights of others. Any Customer or user of this document or products described herein in such applications shall assume all risks of such use and will agree to hold Diodes Incorporated and all the companies whose products are represented on Diodes Incorporated website, harmless against all damages.

Diodes Incorporated does not warrant or accept any liability whatsoever in respect of any products purchased through unauthorized sales channel. Should Customers purchase or use Diodes Incorporated products for any unintended or unauthorized application, Customers shall indemnify and hold Diodes Incorporated and its representatives harmless against all claims, damages, expenses, and attorney fees arising out of, directly or indirectly, any claim of personal injury or death associated with such unintended or unauthorized application.

Products described herein may be covered by one or more United States, international or foreign patents pending. Product names and markings noted herein may also be covered by one or more United States, international or foreign trademarks.

This document is written in English but may be translated into multiple languages for reference. Only the English version of this document is the final and determinative format released by Diodes Incorporated.

LIFE SUPPORT

Diodes Incorporated products are specifically not authorized for use as critical components in life support devices or systems without the express written approval of the Chief Executive Officer of Diodes Incorporated. As used herein:

A. Life support devices or systems are devices or systems which:

1. are intended to implant into the body, or
2. support or sustain life and whose failure to perform when properly used in accordance with instructions for use provided in the labeling can be reasonably expected to result in significant injury to the user.

B. A critical component is any component in a life support device or system whose failure to perform can be reasonably expected to cause the failure of the life support device or to affect its safety or effectiveness.

Customers represent that they have all necessary expertise in the safety and regulatory ramifications of their life support devices or systems, and acknowledge and agree that they are solely responsible for all legal, regulatory and safety-related requirements concerning their products and any use of Diodes Incorporated products in such safety-critical, life support devices or systems, notwithstanding any devices- or systems-related information or support that may be provided by Diodes Incorporated. Further, Customers must fully indemnify Diodes Incorporated and its representatives against any damages arising out of the use of Diodes Incorporated products in such safety-critical, life support devices or systems.

Copyright © 2018, Diodes Incorporated

www.diodes.com

Компания «ЭлектроПласт» предлагает заключение долгосрочных отношений при поставках импортных электронных компонентов на взаимовыгодных условиях!

Наши преимущества:

- Оперативные поставки широкого спектра электронных компонентов отечественного и импортного производства напрямую от производителей и с крупнейших мировых складов;
- Поставка более 17-ти миллионов наименований электронных компонентов;
- Поставка сложных, дефицитных, либо снятых с производства позиций;
- Оперативные сроки поставки под заказ (от 5 рабочих дней);
- Экспресс доставка в любую точку России;
- Техническая поддержка проекта, помощь в подборе аналогов, поставка прототипов;
- Система менеджмента качества сертифицирована по Международному стандарту ISO 9001;
- Лицензия ФСБ на осуществление работ с использованием сведений, составляющих государственную тайну;
- Поставка специализированных компонентов (Xilinx, Altera, Analog Devices, Intersil, Interpoint, Microsemi, Aeroflex, Peregrine, Syfer, Eurofarad, Texas Instrument, Miteq, Cobham, E2V, MA-COM, Hittite, Mini-Circuits,General Dynamics и др.);

Помимо этого, одним из направлений компании «ЭлектроПласт» является направление «Источники питания». Мы предлагаем Вам помощь Конструкторского отдела:

- Подбор оптимального решения, техническое обоснование при выборе компонента;
- Подбор аналогов;
- Консультации по применению компонента;
- Поставка образцов и прототипов;
- Техническая поддержка проекта;
- Защита от снятия компонента с производства.

Как с нами связаться

Телефон: 8 (812) 309 58 32 (многоканальный)
Факс: 8 (812) 320-02-42
Электронная почта: org@eplast1.ru
Адрес: 198099, г. Санкт-Петербург, ул. Калинина, дом 2, корпус 4, литера А.