Ferrites and accessories

RM 6, RM 6 LP
Core and accessories

Series/Type: **B65807, B65808, B65821, B65659**

Date: May 2017

The following products presented in this data sheet are being withdrawn.

Ordering Code	Substitute Product	Date of Withdrawal	Deadline Last Orders	Last Shipments
B65808A5000X000		2018-06-08	2018-09-14	2018-12-14

For further information please contact your nearest EPCOS sales office, which will also support you in selecting a suitable substitute. The addresses of our worldwide sales network are presented at www.epcos.com/sales.

© EPCOS AG 2017. Reproduction, publication and dissemination of this publication, enclosures hereto and the information contained therein without EPCOS' prior express consent is prohibited.

EPCOS AG is a TDK Group Company.

RM 6

Core and accessories

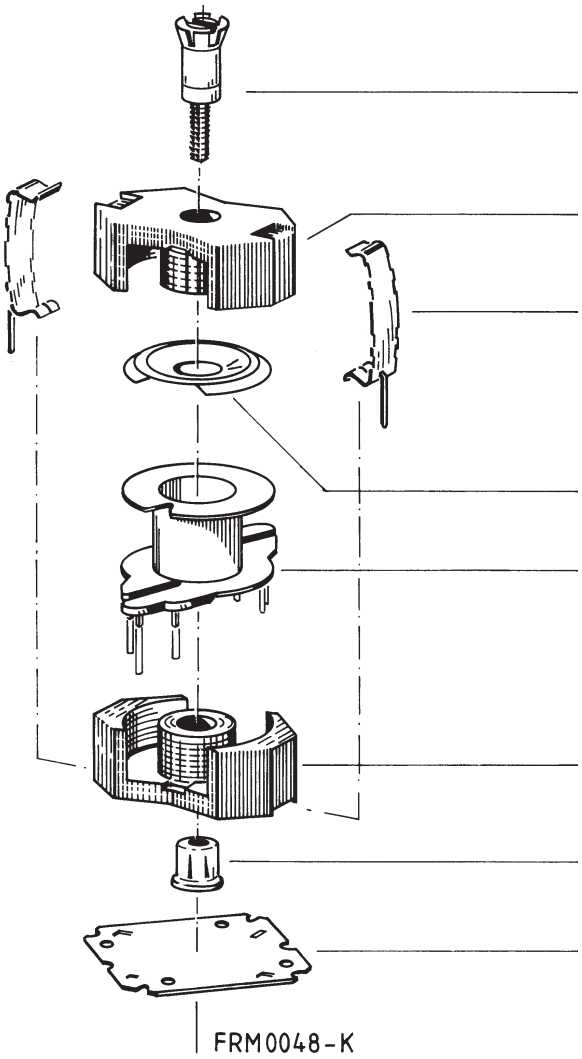

Individual parts	Part no.	Page
Adjusting screw	B65659	10
Core	B65807	3
Clamps	B65808	8
Insulating washer 1	B65808	8
Coil former	B65808	5, 6, 7
Core	B65807	3
Threaded sleeve (glued-in)		
Insulating washer 2	B65808	8

Example of an assembly set

Also available:	Coil former for SMPS transf.	B65808	6
	Coil former for power applications	B65808	7
	SMD coil former	B65821	9
	Clamp	B65808	9
	<u>RM 6 low profile:</u>		
	Core	B65807P	11

- To IEC 62317-4
- Core without center hole for transformer applications
- Delivery mode: sets

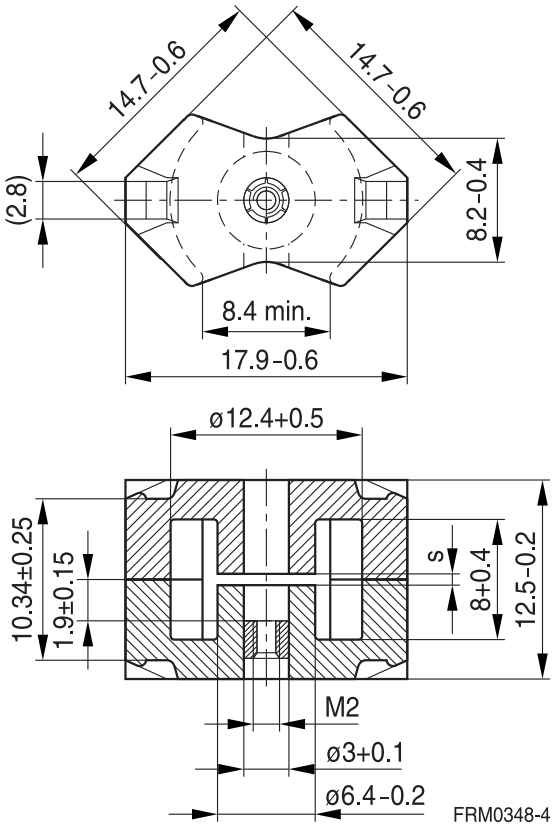

Magnetic characteristics (per set)

	with center hole	without center hole	
$\Sigma l/A$	0.86	0.78	mm^{-1}
l_e	26.9	28.6	mm
A_e	31.3	36.6	mm^2
A_{min}	—	31	mm^2
V_e	840	1050	mm^3

Approx. weight (per set)

m	4.9	5.1	g

Gapped (A_L values/air gaps examples)

Material	A_L value nH	s approx. mm	μ_e	Ordering code[1)] -J without center hole -N with threaded sleeve -C with center hole
K1	40 ±3%	0.80	27.4	B65807+0040A001
M33	63 ±3% 100 ±3%	0.60 0.38	43.2 68.5	B65807+0063A033 B65807+0100A033
N48	160 ±3% 250 ±3% 315 ±3% 400 ±3%	0.22 0.12 0.08 0.05	109 171 215 274	B65807+0160A048 B65807+0250A048 B65807+0315A048 B65807+0400A048
N41	250 ±3%	0.17	155	B65807J0250A041

1) Replace the + by the code letter “C” or “N” for the required version. Standard version is “C”.

Ungapped

Material	A_L value nH	μ_e	P_V W/set	Ordering code -C with center hole -J without center hole
N48	2200 +30/–20%	1500		B65807C0000R048
N45	3500 +30/–20%	2180		B65807J0000R045
N30	4300 +30/–20%	2670		B65807J0000R030
T35	6200 +30/–20%	3860		B65807J0000R035
T38	8600 +40/–30%	5350		B65807J0000Y038
T66	12300 +40/–30%	7650		B65807J0000Y066
N49	1700 +30/–20%	1060	< 0.15 (50 mT, 500 kHz, 100 °C)	B65807J0000R049
N87	2400 +30/–20%	1490	< 0.51 (200 mT, 100 kHz, 100 °C)	B65807J0000R087
N97	2400 +30/–20%	1490	< 0.39 (200 mT, 100 kHz, 100 °C)	B65807J0000R097
N95	2800 +30/–20%	1740	< 0.45 (200 mT, 100 kHz, 100 °C)	B65807J0000R095
N41	3100 +30/–20%	1930	< 0.16 (200 mT, 25 kHz, 100 °C)	B65807J0000R041

Other A_L values/air gaps and materials available on request — see Processing remarks on page 12.

Coil former, squared pins

Material: GFR thermosetting plastic (UL 94 V-0, insulation class to IEC 60085: F ≙ max. operating temperature 155 °C), color code black Sumikon PM 9630® [E41429 (M)], SUMITOMO BAKELITE CO LTD
Solderability: to IEC 60068-2-20, test Ta, method 1 (aging 3): 235 °C, 2 s
Resistance to soldering heat: to IEC 60068-2-20, test Tb, method 1B: 350 °C, 3.5 s
Winding: see Processing notes, 2.1

For matching clamp and insulating washers see page 8.

Sections	A_N mm²	l_N mm	A_R value µΩ	Pins	Ordering code
1	15	30	69	4 5 6	B65808N1004D001 B65808N1005D001 B65808N1006D001
2	14	30	73	4 6	B65808N1004D002 B65808N1006D002

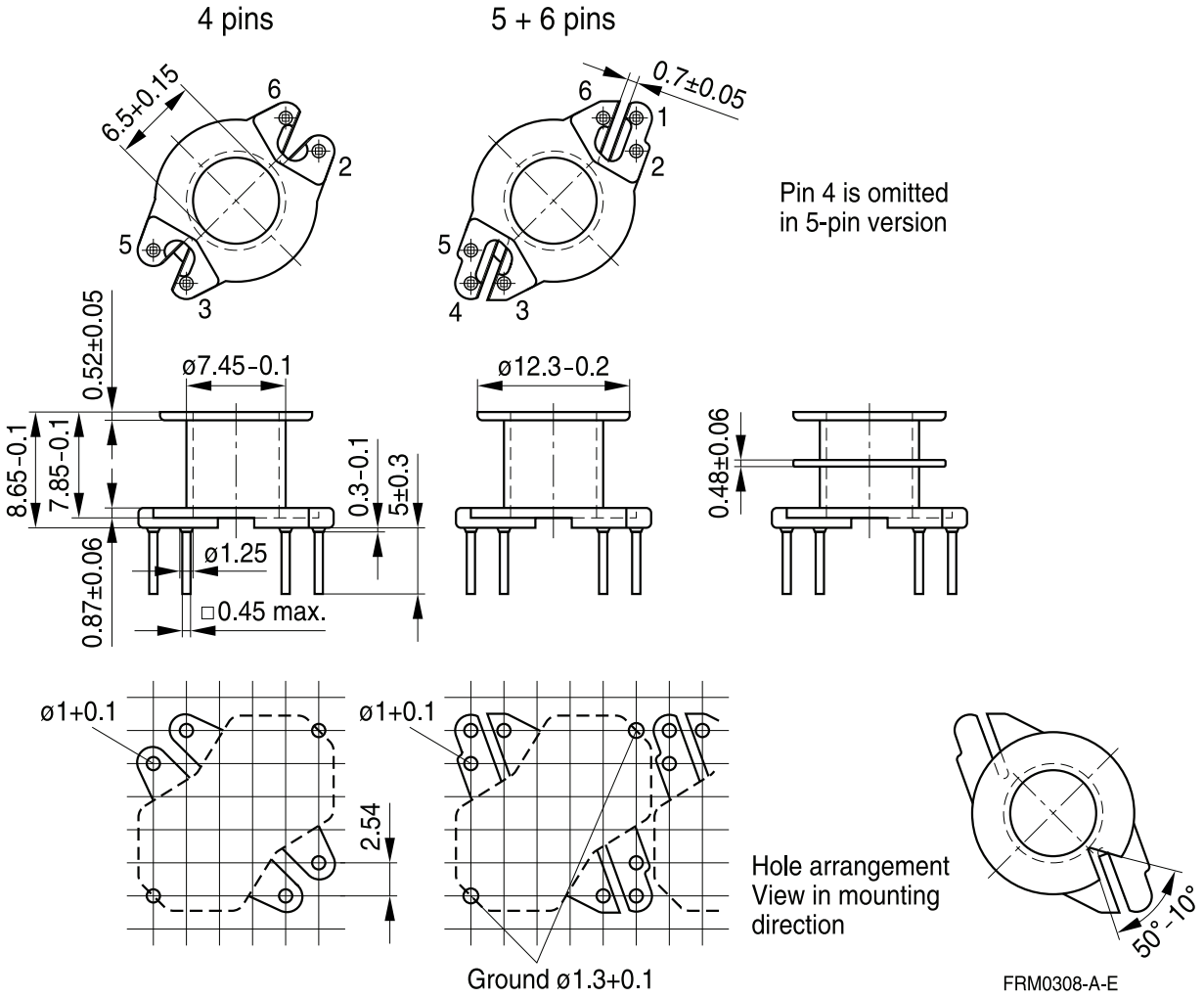

Coil former for SMPS transformers with line isolation

The creepage distances and clearances are designed such that the coil former is suitable for use in SMPS transformers with line isolation.

- Closed center flange with external wire guide
- Optimized for use with automatic winding machines

Material: GFR thermosetting plastic (UL 94 V-0, insulation class to IEC 60085: F ≙ max. operating temperature 155 °C), color code black
Sumikon PM 9630® [E41429 (M)], SUMITOMO BAKELITE CO LTD

Solderability: to IEC 60068-2-20, test Ta, method 1 (aging 3): 235 °C, 2 s

Resistance to soldering heat: to IEC 60068-2-20, test Tb, method 1B: 350 °C, 3.5 s

Winding: see Processing notes, 2.1

For matching clamp and insulating washers see page 8.

Sections	A_N mm²	l_N mm	A_R value μΩ	Pins	Ordering code
2	14	30	73	8	B65808N1108D002

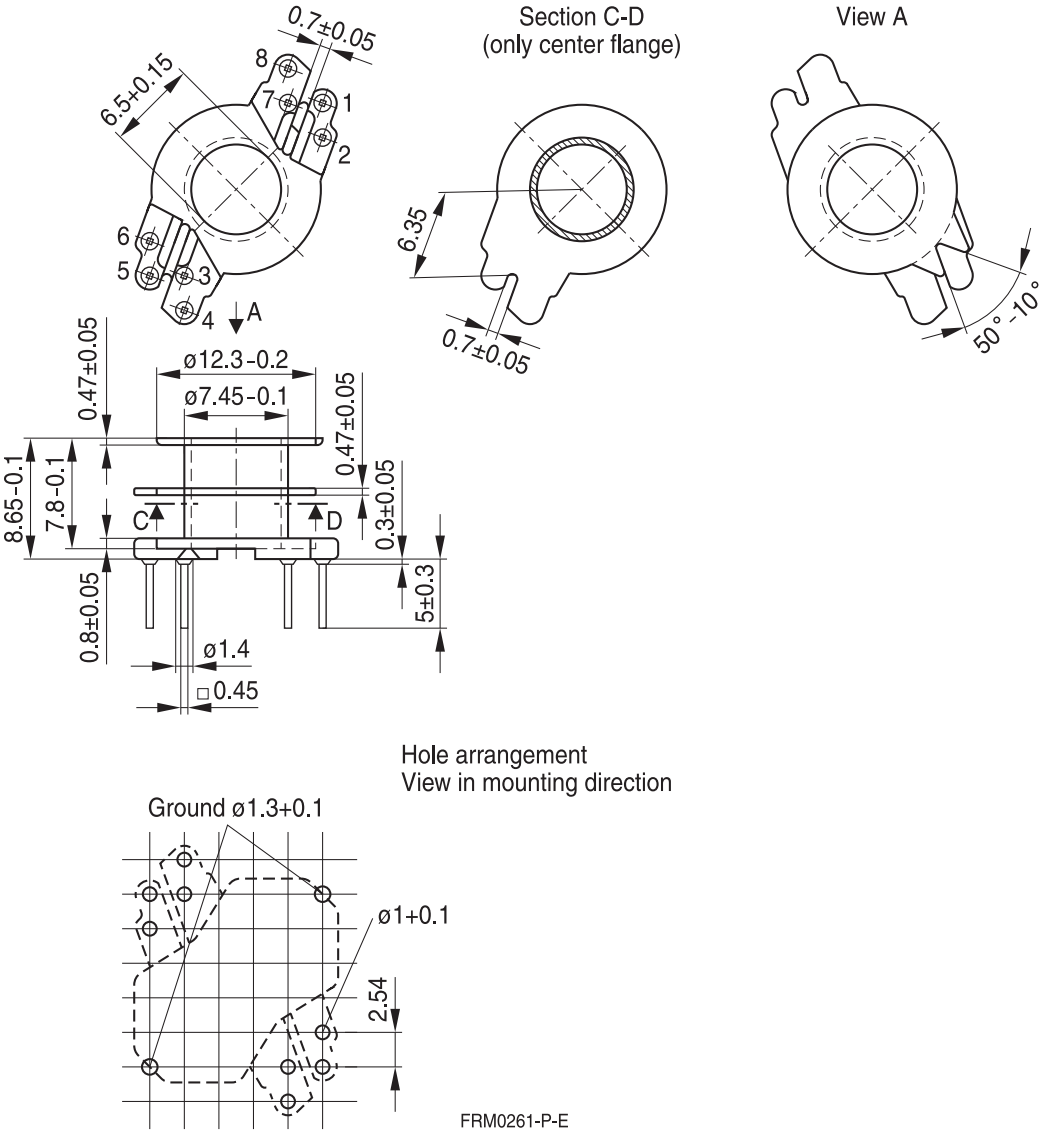

Coil former for power applications with angled pins

Optimized for automatic winding
Material: GFR polyterephthalate (UL 94 V-0, insulation class to IEC 60085: F ≙ max. operating temperature 155 °C), color code black
Valox 420-SE0 [E45329 (M)] SABIC INNOVATIVE PLASTICS B V
Solderability: to IEC 60068-2-20, test Ta, method 1 (aging 3): 235 °C, 2 s
Resistance to soldering heat: to IEC 60068-2-20, test Tb, method 1B: 350 °C, 3.5 s
Winding: see Processing notes, 2.1

For matching clamp and insulating washer 1 see page 8.

Sections	A_N mm²	l_N mm	A_R value µΩ	Pins	Ordering code
1	15	30	69	8	B65808E1508T001

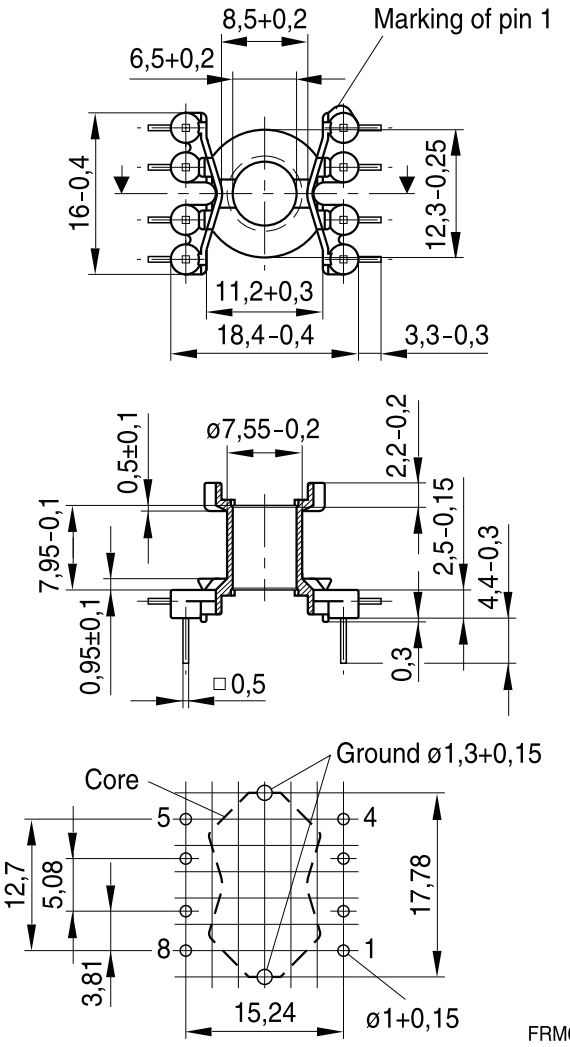

Hole arrangement
View in mounting direction

Clamp

- With ground terminal, made of stainless spring steel (tinned), 0.4 mm thick
- Solderability to IEC 60068-2-20, test Ta, method 1 (aging 3): 235 °C, 2 s

Insulating washer 1 between core and coil former

- For tolerance compensation and for insulation
- Made of polyarylate film (UL 94 V-0, insulation class to IEC 60085: E ≙ 120 °C), 0.08 mm thick Aryphan F685, [E167358 (M)], natural color, LOFO HIGH TECH FILM GMBH

Insulating washer 2 for double-clad PCBs

- Made of polycarbonate (UL 94 V-0, insulation class to IEC 60085: E ≙ 120 °C), 0.25 mm thick Makrofol FR7-2 [E168120 (M)], COVESTRO AG

	Ordering code
Clamp (ordering code per piece, 2 are required)	B65808B2203X000
Insulating washer 1 (reel packing, PU = 1 reel)	B65808A5000X000
Insulating washer 2 (bulk)	B65808C2005X000

Clamp

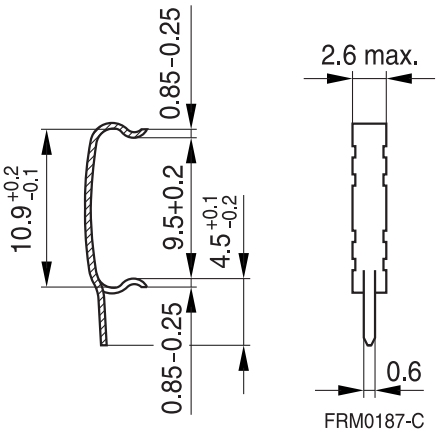

Insulating washer 1

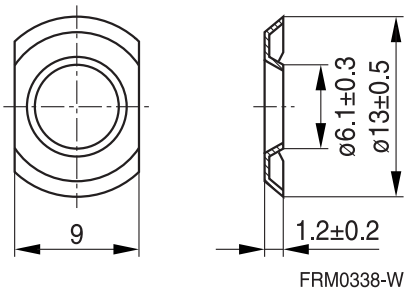

Insulating washer 2

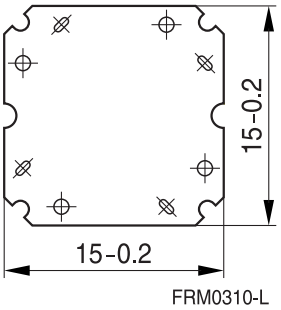

Clamping forces for RM 6

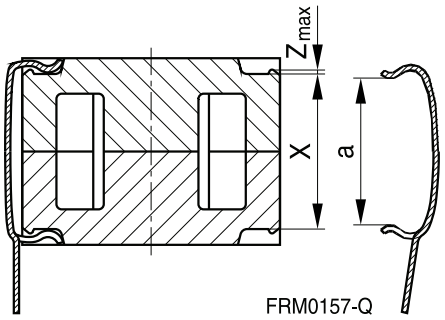

F_{min}: Extension of clamp from a to $a_2 = X_{min}$
F_{max}: Extension of clamp from a to $a_1 = X_{max}$

Clamp opening a (mm)		9.5 +0.2
Core nose Z_{max} (mm)		0.22
Height of core pair X (mm)	X_{min}	10.1
	X_{max}	10.6
Clamping force F (N)	F_{min}	7
	F_{max}	50

SMD

SMD coil former with gullwing terminals

Material: GFR liquid crystal polymer (UL 94 V-0, insulation class to IEC 60085: F ≙ max. operating temperature 155 °C), color code black
Vectra E 130i [E106764 (M)], POLYPLASTICS CO LTD
Vectra E 130i [E83005 (M)], CELANESE INTERNATIONAL CORP.

Solderability: to IEC 60068-2-58, test Td, method 6 (Group 3): 245 °C, 3 s

Resistance to soldering heat: to IEC 60068-2-58, test Td, method 6 (Group 3): 255 °C, 10 s
permissible soldering temperature for wire-wrap connection on coil former: 400 °C, 1 s

Winding: see Processing notes, 2.1

Clamp

- Without ground terminal, made of stainless spring steel, 0.435 mm thick

Sections	A_N mm²	l_N mm	A_R value µΩ	Terminals	Ordering code
1	16.2	31	66	8	B65821C1008T001
Clamp(ordering code per piece, 2 are required)					B65808J2204X000

Coil former

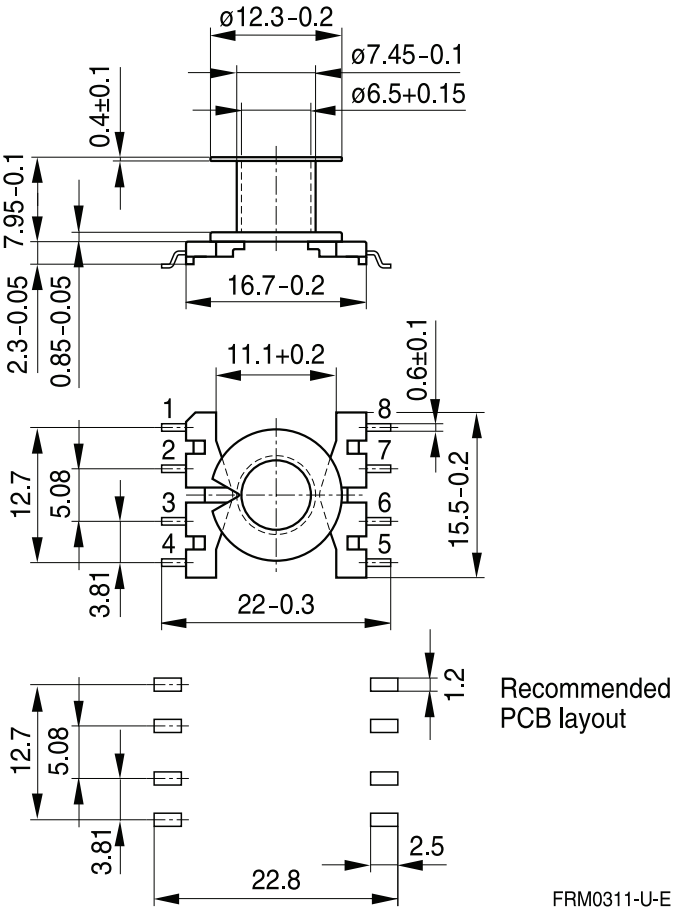

Clamp

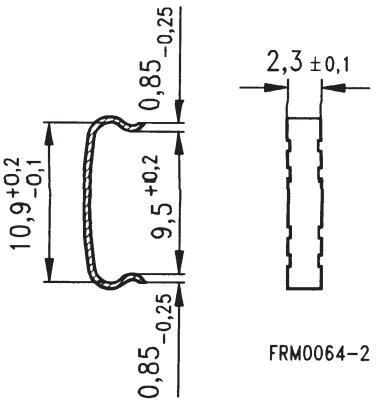

Adjusting screw

- Tube core with thread and core brake made of GFR polyterephthalate
  Pocan B3235® [E245249 (M)], LANXESS AG

Figure	Tube core ∅ × length (mm)	Material	Color code	Ordering code
a	2.62 × 3.6	N22	red	B65659F0001X023
b	2.75 × 4.4	N22	black	B65659F0003X023
c	2.82 × 4.4	N22	yellow	B65659F0004X023

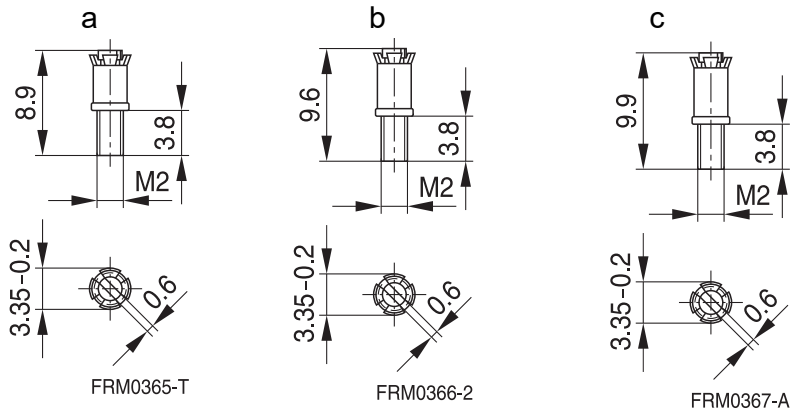

RM 6 »Low Profile«

Core B65807P

- To IEC 62317-4
- For compact transformers
- Without center hole
- Delivery mode: sets

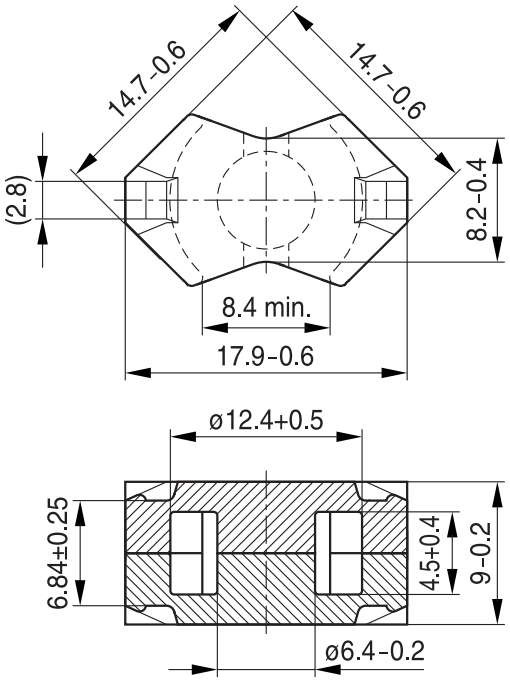

Magnetic characteristics (per set)

$\Sigma l/A$ = 0.58 mm^{-1}
l_e = 21.8 mm
A_e = 37.5 mm^2
A_{min} = 31.2 mm^2
V_e = 820 mm^3

Approx. weight 4.0 g/set

Ungapped

Material	A_L value nH	μ_e	P_V W/set	Ordering code
T38	10500 +40/–30%	4860		B65807P0000Y038
N49	2200 +30/–20%	1020	< 0.14 (50 mT, 500 kHz, 100 °C)	B65807P0000R049
N92	2300 +30/–20%	1060	< 0.44 (200 mT, 100 kHz, 100 °C)	B65807P0000R092
N87	3000 +30/–20%	1390	< 0.40 (200 mT, 100 kHz, 100 °C)	B65807P0000R087

Other A_L values/air gaps and materials available on request — see Processing remarks on page 12.

Mechanical stress and mounting

Ferrite cores have to meet mechanical requirements during assembling and for a growing number of applications. Since ferrites are ceramic materials one has to be aware of the special behavior under mechanical load.

As valid for any ceramic material, ferrite cores are brittle and sensitive to any shock, fast temperature changing or tensile load. Especially high cooling rates under ultrasonic cleaning and high static or cyclic loads can cause cracks or failure of the ferrite cores.

For detailed information see data book, chapter *“General - Definitions, 8.1”*.

Effects of core combination on A_L value

Stresses in the core affect not only the mechanical but also the magnetic properties. It is apparent that the initial permeability is dependent on the stress state of the core. The higher the stresses are in the core, the lower is the value for the initial permeability. Thus the embedding medium should have the greatest possible elasticity.

For detailed information see data book, chapter *“General - Definitions, 8.1”*.

Heating up

Ferrites can run hot during operation at higher flux densities and higher frequencies.

NiZn-materials

The magnetic properties of NiZn-materials can change irreversible in high magnetic fields.

Ferrite Accessories

EPCOS ferrite accessories have been designed and evaluated only in combination with EPCOS ferrite cores. EPCOS explicitly points out that EPCOS ferrite accessories or EPCOS ferrite cores may not be compatible with those of other manufacturers. Any such combination requires prior testing by the customer and will be at the customer‘s own risk.

EPCOS assumes no warranty or reliability for the combination of EPCOS ferrite accessories with cores and other accessories from any other manufacturer.

Processing remarks

The start of the winding process should be soft. Else the flanges may be destroyed.

- Too strong winding forces may blast the flanges or squeeze the tube that the cores can not be mounted any more.
- Too long soldering time at high temperature (>300 °C) may effect coplanarity or pin arrangement.
- Not following the processing notes for soldering of the J-leg terminals may cause solderability problems at the transformer because of pollution with Sn oxyde of the tin bath or burned insulation of the wire. For detailed information see chapter *“Processing notes”*, section 2.2.
- The dimensions of the hole arrangement have fixed values and should be understood as a recommendation for drilling the printed circuit board. For dimensioning the pins, the group of holes can only be seen under certain conditions, as they fit into the given hole arrangement. To avoid problems when mounting the transformer, the manufacturing tolerances for positioning the customers’ drilling process must be considered by increasing the hole diameter.

Display of ordering codes for EPCOS products

The ordering code for one and the same product can be represented differently in data sheets, data books, other publications and the website of EPCOS, or in order-related documents such as shipping notes, order confirmations and product labels. **The varying representations of the ordering codes are due to different processes employed and do not affect the specifications of the respective products**. Detailed information can be found on the Internet under www.epcos.com/orderingcodes.

Symbols and terms

Symbol	Meaning	Unit
A	Cross section of coil	mm^2
A_e	Effective magnetic cross section	mm^2
A_L	Inductance factor; $A_L = L/N^2$	nH
A_{L1}	Minimum inductance at defined high saturation ($\triangleq \mu_a$)	nH
A_{min}	Minimum core cross section	mm^2
A_N	Winding cross section	mm^2
A_R	Resistance factor; $A_R = R_{Cu}/N^2$	$\mu\Omega = 10^{-6}\ \Omega$
B	RMS value of magnetic flux density	Vs/m^2, mT
ΔB	Flux density deviation	Vs/m^2, mT
$\hat{B}$	Peak value of magnetic flux density	Vs/m^2, mT
$\Delta\hat{B}$	Peak value of flux density deviation	Vs/m^2, mT
B_{DC}	DC magnetic flux density	Vs/m^2, mT
B_R	Remanent flux density	Vs/m^2, mT
B_S	Saturation magnetization	Vs/m^2, mT
C_0	Winding capacitance	F = As/V
CDF	Core distortion factor	$mm^{-4.5}$
DF	Relative disaccommodation coefficient $DF = d/\mu_i$	
d	Disaccommodation coefficient	
E_a	Activation energy	J
f	Frequency	s^{-1}, Hz
f_{cutoff}	Cut-off frequency	s^{-1}, Hz
f_{max}	Upper frequency limit	s^{-1}, Hz
f_{min}	Lower frequency limit	s^{-1}, Hz
f_r	Resonance frequency	s^{-1}, Hz
f_{Cu}	Copper filling factor	
g	Air gap	mm
H	RMS value of magnetic field strength	A/m
$\hat{H}$	Peak value of magnetic field strength	A/m
H_{DC}	DC field strength	A/m
H_c	Coercive field strength	A/m
h	Hysteresis coefficient of material	10^{-6} cm/A
h/μ_i^2	Relative hysteresis coefficient	10^{-6} cm/A
I	RMS value of current	A
I_{DC}	Direct current	A
$\hat{I}$	Peak value of current	A
J	Polarization	Vs/m^2
k	Boltzmann constant	J/K
k_3	Third harmonic distortion	
k_{3c}	Circuit third harmonic distortion	
L	Inductance	H = Vs/A

Symbols and terms

Symbol	Meaning	Unit
$\Delta L/L$	Relative inductance change	H
L_0	Inductance of coil without core	H
L_H	Main inductance	H
L_p	Parallel inductance	H
L_{rev}	Reversible inductance	H
L_s	Series inductance	H
l_e	Effective magnetic path length	mm
l_N	Average length of turn	mm
N	Number of turns	
P_{Cu}	Copper (winding) losses	W
P_{trans}	Transferrable power	W
P_V	Relative core losses	mW/g
PF	Performance factor	
Q	Quality factor ($Q = \omega L/R_s = 1/\tan \delta_L$)	
R	Resistance	Ω
R_{Cu}	Copper (winding) resistance (f = 0)	Ω
R_h	Hysteresis loss resistance of a core	Ω
ΔR_h	R_h change	Ω
R_i	Internal resistance	Ω
R_p	Parallel loss resistance of a core	Ω
R_s	Series loss resistance of a core	Ω
R_{th}	Thermal resistance	K/W
R_V	Effective loss resistance of a core	Ω
s	Total air gap	mm
T	Temperature	°C
ΔT	Temperature difference	K
T_C	Curie temperature	°C
t	Time	s
t_v	Pulse duty factor	
$\tan \delta$	Loss factor	
$\tan \delta_L$	Loss factor of coil	
$\tan \delta_r$	(Residual) loss factor at $H \rightarrow 0$	
$\tan \delta_e$	Relative loss factor	
$\tan \delta_h$	Hysteresis loss factor	
$\tan \delta/\mu_i$	Relative loss factor of material at $H \rightarrow 0$	
U	RMS value of voltage	V
Û	Peak value of voltage	V
V_e	Effective magnetic volume	mm^3
Z	Complex impedance	Ω
Z_n	Normalized impedance $\lvert Z\rvert_n = \lvert Z\rvert / N^2 \times \varepsilon\ (l_e/A_e)$	Ω/mm

Symbols and terms

Symbol	Meaning	Unit
α	Temperature coefficient (TK)	1/K
α_F	Relative temperature coefficient of material	1/K
α_e	Temperature coefficient of effective permeability	1/K
ε_r	Relative permittivity	
Φ	Magnetic flux	Vs
η	Efficiency of a transformer	
η_B	Hysteresis material constant	mT^{-1}
η_i	Hysteresis core constant	$A^{-1}H^{-1/2}$
λ_s	Magnetostriction at saturation magnetization	
μ	Relative complex permeability	
μ_0	Magnetic field constant	Vs/Am
μ_a	Relative amplitude permeability	
μ_{app}	Relative apparent permeability	
μ_e	Relative effective permeability	
μ_i	Relative initial permeability	
μ_p'	Relative real (inductive) component of $\overline{\mu}$ (for parallel components)	
μ_p''	Relative imaginary (loss) component of $\overline{\mu}$ (for parallel components)	
μ_r	Relative permeability	
μ_{rev}	Relative reversible permeability	
μ_s'	Relative real (inductive) component of $\overline{\mu}$ (for series components)	
μ_s''	Relative imaginary (loss) component of $\overline{\mu}$ (for series components)	
μ_{tot}	Relative total permeability derived from the static magnetization curve	
ρ	Resistivity	Ωm^{-1}
$\Sigma l/A$	Magnetic form factor	mm^{-1}
τ_{Cu}	DC time constant $\tau_{Cu} = L/R_{Cu} = A_L/A_R$	s
ω	Angular frequency; $\omega = 2\,\Pi f$	s^{-1}

All dimensions are given in mm.

SMD Surface-mount device

Important notes

The following applies to all products named in this publication:

1. Some parts of this publication contain **statements about the suitability of our products for certain areas of application**. These statements are based on our knowledge of typical requirements that are often placed on our products in the areas of application concerned. We nevertheless expressly point out **that such statements cannot be regarded as binding statements about the suitability of our products for a particular customer application.** As a rule we are either unfamiliar with individual customer applications or less familiar with them than the customers themselves. For these reasons, it is always ultimately incumbent on the customer to check and decide whether a product with the properties described in the product specification is suitable for use in a particular customer application.
2. We also point out that **in individual cases, a malfunction of electronic components or failure before the end of their usual service life cannot be completely ruled out in the current state of the art, even if they are operated as specified.** In customer applications requiring a very high level of operational safety and especially in customer applications in which the malfunction or failure of an electronic component could endanger human life or health (e.g. in accident prevention or life-saving systems), it must therefore be ensured by means of suitable design of the customer application or other action taken by the customer (e.g. installation of protective circuitry or redundancy) that no injury or damage is sustained by third parties in the event of malfunction or failure of an electronic component.
3. **The warnings, cautions and product-specific notes must be observed.**
4. In order to satisfy certain technical requirements, **some of the products described in this publication may contain substances subject to restrictions in certain jurisdictions (e.g. because they are classed as hazardous)**. Useful information on this will be found in our Material Data Sheets on the Internet (www.tdk-electronics.tdk.com/material). Should you have any more detailed questions, please contact our sales offices.
5. We constantly strive to improve our products. Consequently, **the products described in this publication may change from time to time**. The same is true of the corresponding product specifications. Please check therefore to what extent product descriptions and specifications contained in this publication are still applicable before or when you place an order.

   We also **reserve the right to discontinue production and delivery of products**. Consequently, we cannot guarantee that all products named in this publication will always be available. The aforementioned does not apply in the case of individual agreements deviating from the foregoing for customer-specific products.
6. Unless otherwise agreed in individual contracts, **all orders are subject to our General Terms and Conditions of Supply.**
7. **Our manufacturing sites serving the automotive business apply the IATF 16949 standard.** The IATF certifications confirm our compliance with requirements regarding the quality management system in the automotive industry. Referring to customer requirements and customer specific requirements ("CSR") TDK always has and will continue to have the policy of respecting individual agreements. Even if IATF 16949 may appear to support the acceptance of unilateral requirements, we hereby like to emphasize that **only requirements mutually agreed upon can and will be implemented in our Quality Management System.** For clarification purposes we like to point out that obligations from IATF 16949 shall only become legally binding if individually agreed upon.
8. The trade names EPCOS, CeraCharge, CeraDiode, CeraLink, CeraPad, CeraPlas, CSMP, CTVS, DeltaCap, DigiSiMic, ExoCore, FilterCap, FormFit, LeaXield, MiniBlue, MiniCell, MKD, MKK, MotorCap, PCC, PhaseCap, PhaseCube, PhaseMod, PhiCap, PowerHap, PQSine, PQvar, SIFERRIT, SIFI, SIKOREL, SilverCap, SIMDAD, SiMic, SIMID, SineFormer, SIOV, ThermoFuse, WindCap are **trademarks registered or pending** in Europe and in other countries. Further information will be found on the Internet at www.tdk-electronics.tdk.com/trademarks.

Release 2018-10

Mouser Electronics

Authorized Distributor

Click to View Pricing, Inventory, Delivery & Lifecycle Information:

EPCOS / TDK:

B65807C0000R048 B65808K1006D1 B65807J0000Y038 B65807J0000R030 B65807C0000R035 B65807C0000Y038 B65807C0160A048 B65807C0250A048 B65807C0315A048 B65807C0400A048 B65807J0000R035 B65807J0000R041 B65807J0000R045 B65807J0000R048 B65807J0000R049 B65807J0000R097 B65807J0000Y066 B65807J0160A048 B65807J0250A041 B65807J0250A048 B65807J0315A048 B65807J0400A048 B65807N0040A001 B65807N0063A033 B65807N0100A033 B65807N0160A048 B65807N0250A048 B65807N0315A048 B65807N0400A048 B65807P0000R049 B65807P0000R087 B65807P0000R092 B65807P0000Y038 B65808J2204X000 B65808K1004D001 B65808N1004D001 B65808N1004D002 B65808N1005D001 B65808N1006D001 B65808N1006D002 B65808X1108D002 B65821C1008T001 B65808B2203X000 B65808N1108D002 B65808E1508T001 B65808S1108D002 B65808C2005X000 B65807J0000R087 B65807J0100A033

Компания «ЭлектроПласт» предлагает заключение долгосрочных отношений при поставках импортных электронных компонентов на взаимовыгодных условиях!

Наши преимущества:

- Оперативные поставки широкого спектра электронных компонентов отечественного и импортного производства напрямую от производителей и с крупнейших мировых складов;
- Поставка более 17-ти миллионов наименований электронных компонентов;
- Поставка сложных, дефицитных, либо снятых с производства позиций;
- Оперативные сроки поставки под заказ (от 5 рабочих дней);
- Экспресс доставка в любую точку России;
- Техническая поддержка проекта, помощь в подборе аналогов, поставка прототипов;
- Система менеджмента качества сертифицирована по Международному стандарту ISO 9001;
- Лицензия ФСБ на осуществление работ с использованием сведений, составляющих государственную тайну;
- Поставка специализированных компонентов (Xilinx, Altera, Analog Devices, Intersil, Interpoint, Microsemi, Aeroflex, Peregrine, Syfer, Eurofarad, Texas Instrument, Miteq, Cobham, E2V, MA-COM, Hittite, Mini-Circuits,General Dynamics и др.);

Помимо этого, одним из направлений компании «ЭлектроПласт» является направление «Источники питания». Мы предлагаем Вам помощь Конструкторского отдела:

- Подбор оптимального решения, техническое обоснование при выборе компонента;
- Подбор аналогов;
- Консультации по применению компонента;
- Поставка образцов и прототипов;
- Техническая поддержка проекта;
- Защита от снятия компонента с производства.

Как с нами связаться

Телефон: 8 (812) 309 58 32 (многоканальный)
Факс: 8 (812) 320-02-42
Электронная почта: org@eplast1.ru
Адрес: 198099, г. Санкт-Петербург, ул. Калинина, дом 2, корпус 4, литера А.