Bipolar Transistors Silicon PNP Epitaxial Type

TTA1713

1. Applications

- Low-Frequency Power Amplifiers

2. Packaging and Internal Circuit

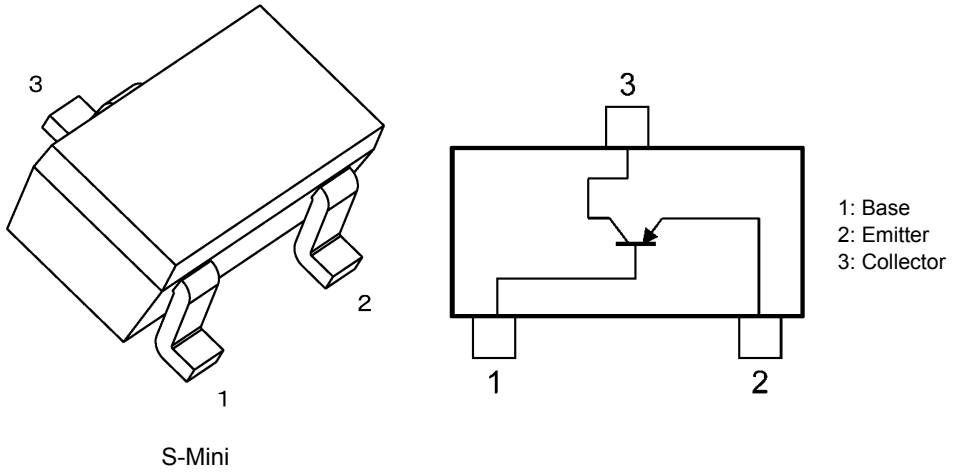

3. Absolute Maximum Ratings (Note) (Unless otherwise specified, T_a = 25 °C)

Characteristics	Symbol	Rating	Unit
Collector-base voltage	V_{CBO}	-50	V
Collector-emitter voltage	V_{CEO}	-45	V
Emitter-base voltage	V_{EBO}	-5	V
Collector current	I_C	-500	mA
Base current	I_B	-50	mA
Collector power dissipation (Note 1)	P_C	200	mW
Junction temperature	T_j	150	°C
Storage temperature	T_{stg}	- 55 to 150	°C

Note: Using continuously under heavy loads (e.g. the application of high temperature/current/voltage and the significant change in temperature, etc.) may cause this product to decrease in the reliability significantly even if the operating conditions (i.e. operating temperature/current/voltage, etc.) are within the absolute maximum ratings.
Please design the appropriate reliability upon reviewing the Toshiba Semiconductor Reliability Handbook ("Handling Precautions"/"Derating Concept and Methods") and individual reliability data (i.e. reliability test report and estimated failure rate, etc).

Note 1: Device mounted on a 25.4 mm × 25.4 mm × 1.6 mm FR4 glass epoxy board (Cu pad: 0.42 mm² × 3)

Start of commercial production
2017-06

©2017-2018
Toshiba Electronic Devices & Storage Corporation

4. Electrical Characteristics (Unless otherwise specified, T_a = 25 °C)

Characteristics	Symbol	Note	Test Condition	Min	Typ.	Max	Unit
Collector cut-off current	I_{CBO}		V_{CB} = -50 V , I_E = 0 mA	—	—	-100	nA
Emitter cut-off current	I_{EBO}		V_{EB} = -5 V, I_C = 0 mA	—	—	-100	nA
DC current gain	$h_{FE}(1)$	(Note 1)	V_{CE} = -1 V, I_C = -100 mA	120	—	390	—
	$h_{FE}(2)$		V_{CE} = -1 V, I_C = -500 mA	40	—	—	—
Collector-emitter saturation voltage	$V_{CE(sat)}$		I_C = -500 mA, I_B = -50 mA	—	—	-0.4	V
Base-emitter voltage	V_{BE}		V_{CE} = -1 V, I_C = -100 mA	—	—	-1.0	V
Transition frequency	f_T		V_{CE} = -5 V, I_C = -10 mA, f = 100 MHz	80	—	—	MHz
Collector output capacitance	C_{ob}		V_{CB} = -10 V , I_E = 0 mA, f = 1 MHz	—	4	—	pF

Note 1: h_{FE} classification: Y rank 120 to 270, GR rank 180 to 390

5. Marking

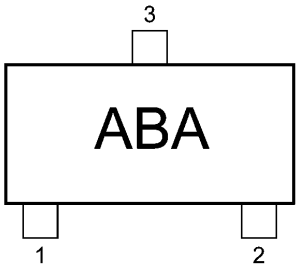

h_{FE} rank: Y

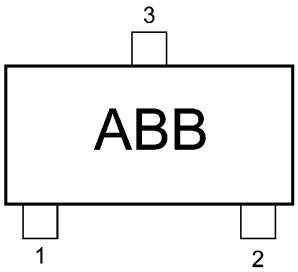

h_{FE} rank: GR

6. Characteristics Curves (Note)

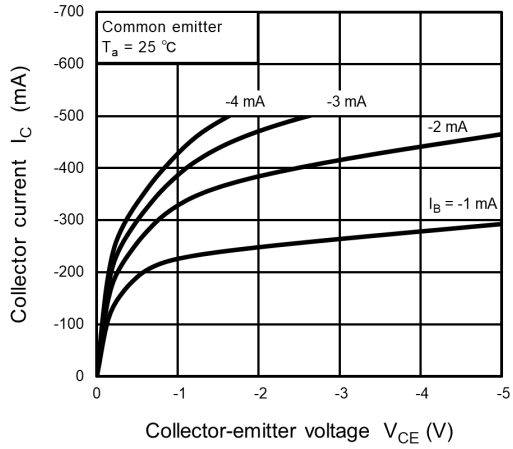

Fig. 6.1 I_C - V_{CE}

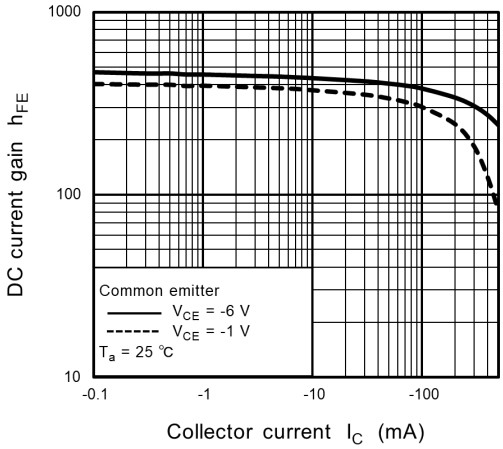

Fig. 6.2 h_{FE} - I_C

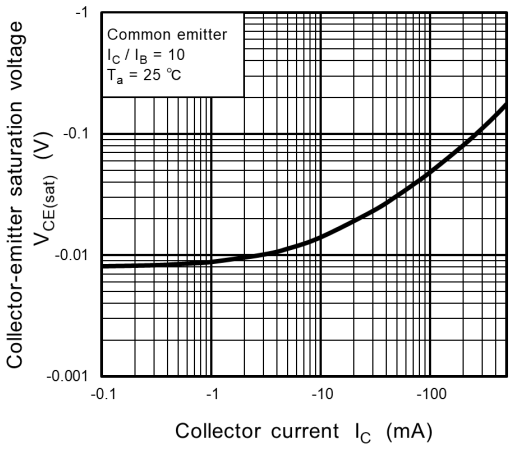

Fig. 6.3 $V_{CE(sat)}$ - I_C

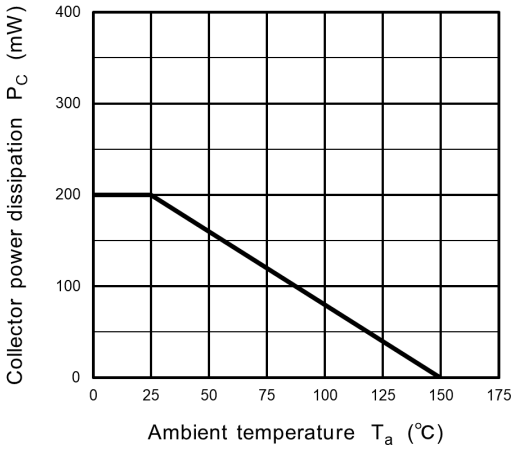

Fig. 6.4 P_C - T_a

Note: The above characteristics curves are presented for reference only and not guaranteed by production test, unless otherwise noted.

Package Dimensions

Unit: mm

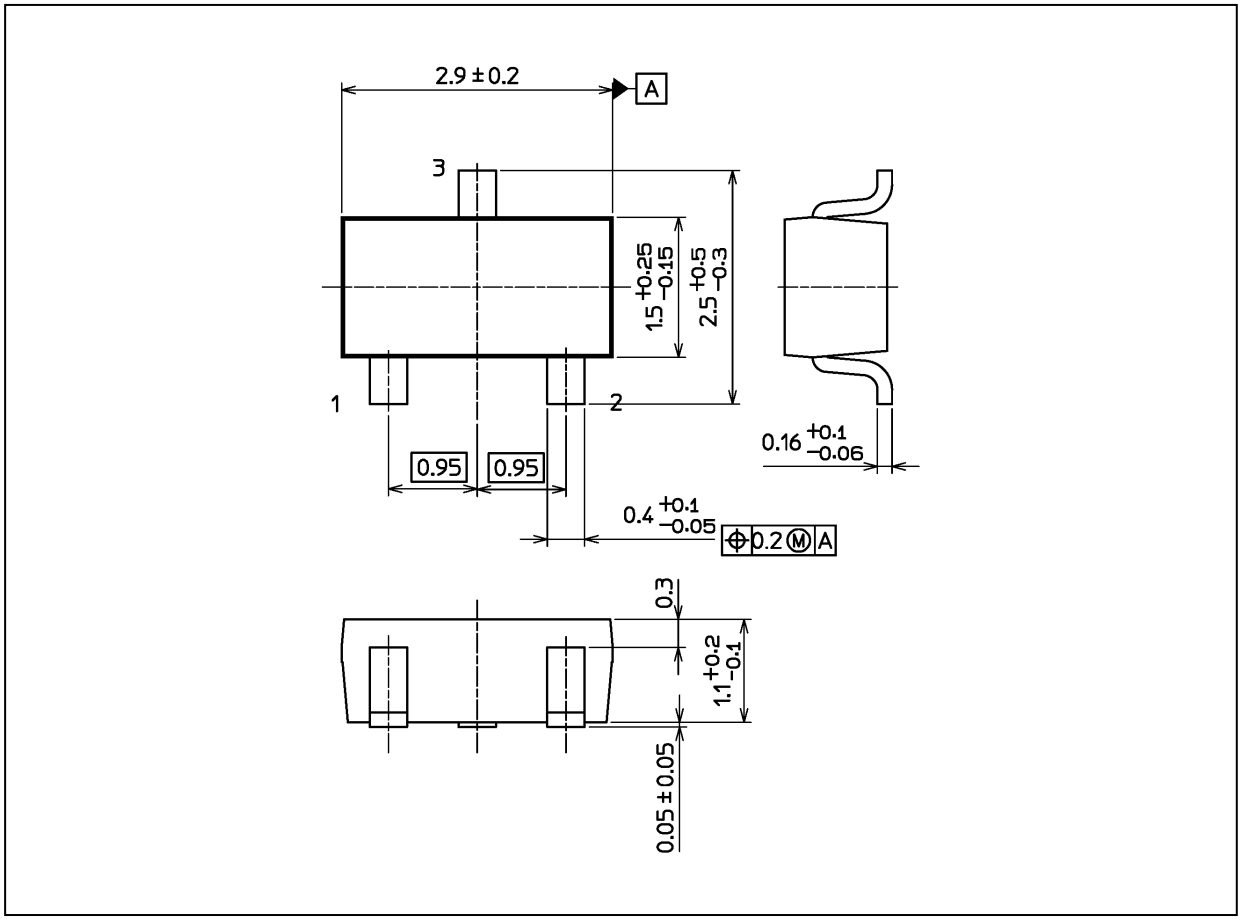

Weight: 12 mg (typ.)

Package Name(s)
Nickname: S-Mini

RESTRICTIONS ON PRODUCT USE

Toshiba Corporation and its subsidiaries and affiliates are collectively referred to as "TOSHIBA".
Hardware, software and systems described in this document are collectively referred to as "Product".

- TOSHIBA reserves the right to make changes to the information in this document and related Product without notice.
- This document and any information herein may not be reproduced without prior written permission from TOSHIBA. Even with TOSHIBA's written permission, reproduction is permissible only if reproduction is without alteration/omission.
- Though TOSHIBA works continually to improve Product's quality and reliability, Product can malfunction or fail. Customers are responsible for complying with safety standards and for providing adequate designs and safeguards for their hardware, software and systems which minimize risk and avoid situations in which a malfunction or failure of Product could cause loss of human life, bodily injury or damage to property, including data loss or corruption. Before customers use the Product, create designs including the Product, or incorporate the Product into their own applications, customers must also refer to and comply with (a) the latest versions of all relevant TOSHIBA information, including without limitation, this document, the specifications, the data sheets and application notes for Product and the precautions and conditions set forth in the "TOSHIBA Semiconductor Reliability Handbook" and (b) the instructions for the application with which the Product will be used with or for. Customers are solely responsible for all aspects of their own product design or applications, including but not limited to (a) determining the appropriateness of the use of this Product in such design or applications; (b) evaluating and determining the applicability of any information contained in this document, or in charts, diagrams, programs, algorithms, sample application circuits, or any other referenced documents; and (c) validating all operating parameters for such designs and applications. **TOSHIBA ASSUMES NO LIABILITY FOR CUSTOMERS' PRODUCT DESIGN OR APPLICATIONS.**
- **PRODUCT IS NEITHER INTENDED NOR WARRANTED FOR USE IN EQUIPMENTS OR SYSTEMS THAT REQUIRE EXTRAORDINARILY HIGH LEVELS OF QUALITY AND/OR RELIABILITY, AND/OR A MALFUNCTION OR FAILURE OF WHICH MAY CAUSE LOSS OF HUMAN LIFE, BODILY INJURY, SERIOUS PROPERTY DAMAGE AND/OR SERIOUS PUBLIC IMPACT ("UNINTENDED USE").** Except for specific applications as expressly stated in this document, Unintended Use includes, without limitation, equipment used in nuclear facilities, equipment used in the aerospace industry, medical equipment, equipment used for automobiles, trains, ships and other transportation, traffic signaling equipment, equipment used to control combustions or explosions, safety devices, elevators and escalators, devices related to electric power, and equipment used in finance-related fields. **IF YOU USE PRODUCT FOR UNINTENDED USE, TOSHIBA ASSUMES NO LIABILITY FOR PRODUCT.** For details, please contact your TOSHIBA sales representative.
- Do not disassemble, analyze, reverse-engineer, alter, modify, translate or copy Product, whether in whole or in part.
- Product shall not be used for or incorporated into any products or systems whose manufacture, use, or sale is prohibited under any applicable laws or regulations.
- The information contained herein is presented only as guidance for Product use. No responsibility is assumed by TOSHIBA for any infringement of patents or any other intellectual property rights of third parties that may result from the use of Product. No license to any intellectual property right is granted by this document, whether express or implied, by estoppel or otherwise.
- **ABSENT A WRITTEN SIGNED AGREEMENT, EXCEPT AS PROVIDED IN THE RELEVANT TERMS AND CONDITIONS OF SALE FOR PRODUCT, AND TO THE MAXIMUM EXTENT ALLOWABLE BY LAW, TOSHIBA (1) ASSUMES NO LIABILITY WHATSOEVER, INCLUDING WITHOUT LIMITATION, INDIRECT, CONSEQUENTIAL, SPECIAL, OR INCIDENTAL DAMAGES OR LOSS, INCLUDING WITHOUT LIMITATION, LOSS OF PROFITS, LOSS OF OPPORTUNITIES, BUSINESS INTERRUPTION AND LOSS OF DATA, AND (2) DISCLAIMS ANY AND ALL EXPRESS OR IMPLIED WARRANTIES AND CONDITIONS RELATED TO SALE, USE OF PRODUCT, OR INFORMATION, INCLUDING WARRANTIES OR CONDITIONS OF MERCHANTABILITY, FITNESS FOR A PARTICULAR PURPOSE, ACCURACY OF INFORMATION, OR NONINFRINGEMENT.**
- Do not use or otherwise make available Product or related software or technology for any military purposes, including without limitation, for the design, development, use, stockpiling or manufacturing of nuclear, chemical, or biological weapons or missile technology products (mass destruction weapons). Product and related software and technology may be controlled under the applicable export laws and regulations including, without limitation, the Japanese Foreign Exchange and Foreign Trade Law and the U.S. Export Administration Regulations. Export and re-export of Product or related software or technology are strictly prohibited except in compliance with all applicable export laws and regulations.
- Please contact your TOSHIBA sales representative for details as to environmental matters such as the RoHS compatibility of Product. Please use Product in compliance with all applicable laws and regulations that regulate the inclusion or use of controlled substances, including without limitation, the EU RoHS Directive. **TOSHIBA ASSUMES NO LIABILITY FOR DAMAGES OR LOSSES OCCURRING AS A RESULT OF NONCOMPLIANCE WITH APPLICABLE LAWS AND REGULATIONS.**

TOSHIBA ELECTRONIC DEVICES & STORAGE CORPORATION

©2017-2018
Toshiba Electronic Devices & Storage Corporation

Mouser Electronics

Authorized Distributor

Click to View Pricing, Inventory, Delivery & Lifecycle Information:

Toshiba:

TTA1713-GR,LF TTA1713-Y,LF

Компания «ЭлектроПласт» предлагает заключение долгосрочных отношений при поставках импортных электронных компонентов на взаимовыгодных условиях!

Наши преимущества:

- Оперативные поставки широкого спектра электронных компонентов отечественного и импортного производства напрямую от производителей и с крупнейших мировых складов;
- Поставка более 17-ти миллионов наименований электронных компонентов;
- Поставка сложных, дефицитных, либо снятых с производства позиций;
- Оперативные сроки поставки под заказ (от 5 рабочих дней);
- Экспресс доставка в любую точку России;
- Техническая поддержка проекта, помощь в подборе аналогов, поставка прототипов;
- Система менеджмента качества сертифицирована по Международному стандарту ISO 9001;
- Лицензия ФСБ на осуществление работ с использованием сведений, составляющих государственную тайну;
- Поставка специализированных компонентов (Xilinx, Altera, Analog Devices, Intersil, Interpoint, Microsemi, Aeroflex, Peregrine, Syfer, Eurofarad, Texas Instrument, Miteq, Cobham, E2V, MA-COM, Hittite, Mini-Circuits,General Dynamics и др.);

Помимо этого, одним из направлений компании «ЭлектроПласт» является направление «Источники питания». Мы предлагаем Вам помощь Конструкторского отдела:

- Подбор оптимального решения, техническое обоснование при выборе компонента;
- Подбор аналогов;
- Консультации по применению компонента;
- Поставка образцов и прототипов;
- Техническая поддержка проекта;
- Защита от снятия компонента с производства.

Как с нами связаться

Телефон: 8 (812) 309 58 32 (многоканальный)
Факс: 8 (812) 320-02-42
Электронная почта: org@eplast1.ru
Адрес: 198099, г. Санкт-Петербург, ул. Калинина, дом 2, корпус 4, литера А.